SIMAG

SDN 30
SDN 35

R 134 A VERSION

SPARE PARTS LIST
CATALOGO RICAMBI
CATALOGUE PIÈCES DÉTACHÉES
ERSATZTEILENKATALOG

090090.07 REV. 03/2015

PAGE PAGINA PAGE SEITE	TABLE OF CONTENTS	INDICE	TABLE DES MATIERES	INHALTVERZEICHNIS
1	TABLE OF CONTENTS	INDICE	TABLE DES MATIERES	INHALTVERZEICHNIS
2/3	UNIT PANELS	ASSIEME MOBILE	ENS. CAROSSERIE	MACHINE GEHAUSE
4/5	REFRIGERANT SYSTEM AIR COOLED	SISTEMA REFRIGERANTE RAFFR. AD ARIA	CIRCUIT FRIGORIFIQUE REFROID. A AIR	GEFRIERSYSTEM LUFTGEKUEHLT
6/7	REFRIGERANT SYSTEM WATER COOLED	SISTEMA REFRIGERANTE RAFFR. AD ACQUA	CIRCUIT FRIGORIFIQUE REFROID. A EAU	GEFRIERSYSTEM WASSERGEKUEHLT
8/9	WATER SYSTEM	CIRCUITO IDRAULICO	CIRCUIT HYDRAULIQUE	WASSER SYSTEM
10/11	CONTROL BOX	SCATOLA DI CONTROLLO	BOITE ELECTRIQUE	SCHALTSCHRANK
12	COMPRESSOR AND ELECTRIC COMPONENT CHARTS	TABELLA COMPRESSORI E COMPONENTI ELETTRICI	LISTE DES COMPRESSEURS ET COMPOSANTS ELECTRIQUE	KOMPRESSOR UND ELEKTRISCHER TEILLISTE

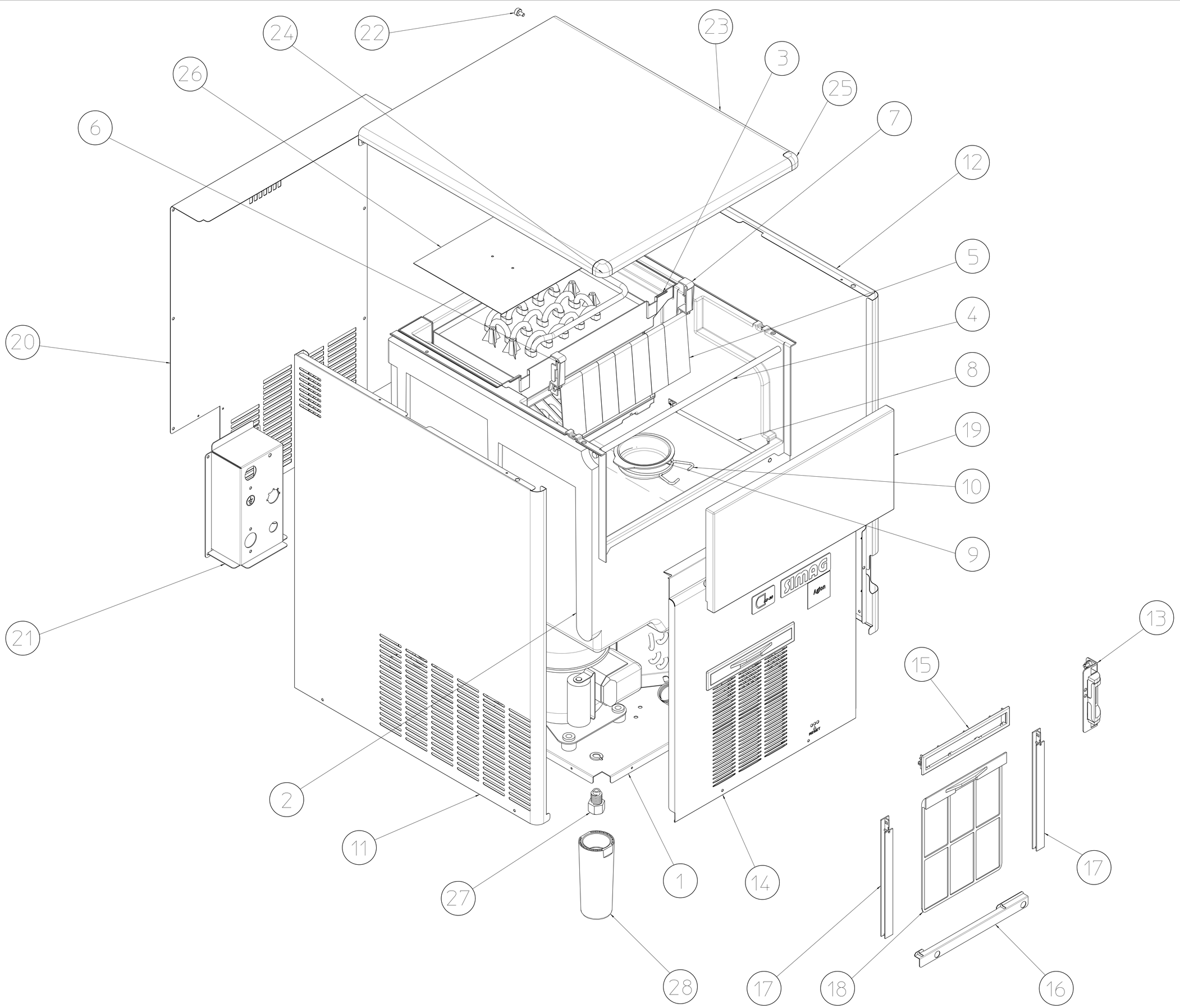
24
22
23
3
26
25
7
6
12
5
4
20
8
19
10
9
21
13
15
2
11
27
1
14
28
17
18
16
17

SDN 30 - SDN 35 -UNIT PANELS - ASSIEME MOBILE - ENS. CARROSSERIE - MACHINE GEHAUSE-

ITEM NO POS. NO REP. NO REF. NO	PART NO CODICE REFERENCE STUECK NR	DESCRIPTION	DESCRIZIONE	DESIGNATION	BESCHREIBUNG
1	702532 00	BASE SDN 30	PIASTRA DI BASE SDN 30	PLAQUE DE BASE SDN 30	GRUNDPLATTE SDN 30
	782692 00	BASE SDN 35	PIASTRA DI BASE SDN 35	PLAQUE DE BASE SDN 35	GRUNDPLATTE SDN 35
2	782094 03	INSULATED BIN ASSY SDN 30	ASSIEME CELLA ISOLATA SDN 30	ENS. CABINE SDN 30	ISOLIEREISSPEICHER SDN 30
	782094 04	INSULATED BIN ASSY SDN 35	ASSIEME CELLA ISOLATA SDN 35	ENS. CABINE SDN 35	ISOLIEREISSPEICHER SDN 35
3	660635 05	EVAPORATOR HOUSING SDN 30	INVOLUCRO EVAPORATORE SDN 30	CHAMBRE INTERIEUR SDN 30	CELLE INTERN SDN 30
	660635 06	EVAPORATOR HOUSING SDN 35	INVOLUCRO EVAPORATORE SDN 35	CHAMBRE INTERIEUR SDN 35	CELLE INTERN SDN 35
4	732016 07	BIN DOOR BRACKET	ASTA SPORTELLO	TIGE PORTE	KLAPPENACHSE
5	783171 01R	CURTAIN ASSY	ASSIEME TENDINA	ENS. LAMELLE	ABDECKKLAPPE GESAMTHEIT
6	660388 00	LEFT CURTAIN SUPPORT	SUPP. TENDINA SINISTRO	SUPP. LAMELLE GAUCHE	LINKE ABDECKLAPPE HALTERUNG
7	660388 01	RIGHT CURTAIN SUPPORT	SUPP. TENDINA DESTRO	SUPP.LAMELLE DROITE	RECHTE ABDECKLAPPE HALTERUNG
8	732016 07	BULB HOLDER	TUBO PORTABULBO	TUBE PORTEBULBE	FUEHLERHALTER
9	660741 00	PLASTIC PLUG	TAPPO INVOLUCRO EVAPORAT.	BOUCHON EN PLASTIQUE	PLASTIKSTOPFEN
10	460047 01	SPRING	MOLLA	RESSORT	FEDER
11	722303 00	LEFT SIDE PANEL S.S.	PANNELLO SINISTRO INOX	JOUE GAUCHE ACIER INOX	LINKE GEHÄUSESEITE EDELSTAHL
12	722302 00	RIGHT SIDE PANEL S.S.	PANNELLO DESTRO INOX	JOUE DROITE ACIER INOX	RECHTEGEHÄUSESEITE EDELSTAHL
13	660882 00	FRONT SWITCH PLASTIC PROTEC.	CARTER PROTEZIONE INTERRUTT.	CARTER PROTECTION INTERRUPT	SCHALTERABDECKUNG
14	722305 00	FRONT. PANEL AIR VERS. SDN 30	PANNEL. ANTER. VERS. ARIA SDN 30	PANNEAU AVANT PAR AIR SDN 30	VORDERWAND EDELST. LUFT SDN 30
	722305 01	FRONT. PANEL WAT. VERS. SDN 35	PANNEL. ANTER. VERS. ACQUA SDN 35	PANNEAU AVANT REFR. EAU SDN 35	VORDERWAND EDELST. WASSER SDN 35
15	660886 00	AIR FILTER SEAT	SEDE FILTRO ARIA	SIEGE FILTER A AIR	LUFTFILTERHALTER
16	724422 01	BRACKET SLIDE AIR FILTER	SUPPORTO GUIDA FILTRO ARIA	SUPPORT GLISSIERE FILTER A AIR	TRAGER FUHRUNF FUR LUFTFILTER
17	660887 00	SLIDE AIR FILTER	GUIDA FILTRO ARIA	GLISSIERE FILTER A AIR	FUHRUNF FUR LUFTFILTER
18	660885 00	AIR FILTER	FILTRO ARIA	FILTER A AIR	LUFT FILTIER
19	782092 05R	BIN DOOR	SPORTELLO	PORTE CABINE	SPEICHERTUER
20	702533 00	REAR PANEL	PANNELLO POSTERIORE	PANNEAU POSTERIEUR	HINTERE ABDECKUNG
21	702526 00	METAL BRACKET FOR FITTING	SUPPORTO ATTACCHI	SUPPORT DE RACCORDS	METALLTRÄGER
22	650806 00	REAR STUD	PERNO POSTERIORE	AXE	STIFT
23	722304 00	TOP PANEL S.S.	PANNELLO SUPERIORE INOX	ENS. COUVERCLE	DECKEL GESAMTHEIT
24	660884 01	LEFT TOP CAP	TAPPO IN PLASTICA SINISTRO	CAPUCHON EN PLAST. GAUCHE	PLASTIK PROFEN LINK
25	660884 00	RIGHT TOP CAP	TAPPO IN PLASTICA DESTRO	CAPUCHON EN PLAST. DROITE	PLASTIK PROFEN RECHT
26	650708 00	PLASTIC COVER	COPERTURA IN PLASTICA	PROTECTION EN PLASTIQUE	PLASTIKABDECKUNG
27	650382 01	LEVELLING FOOT SDN 30	PIEDE REGOLABILE SDN 30	PIED RÉGLABE SDN 30	GERÄTEFUSS SDN 30
28	660638 02	LEVELLING FOOT SDN 35	PIEDE REGOLABILE SDN 35	PIED RÉGLABE SDN 35	GERÄTEFUSS SDN 35

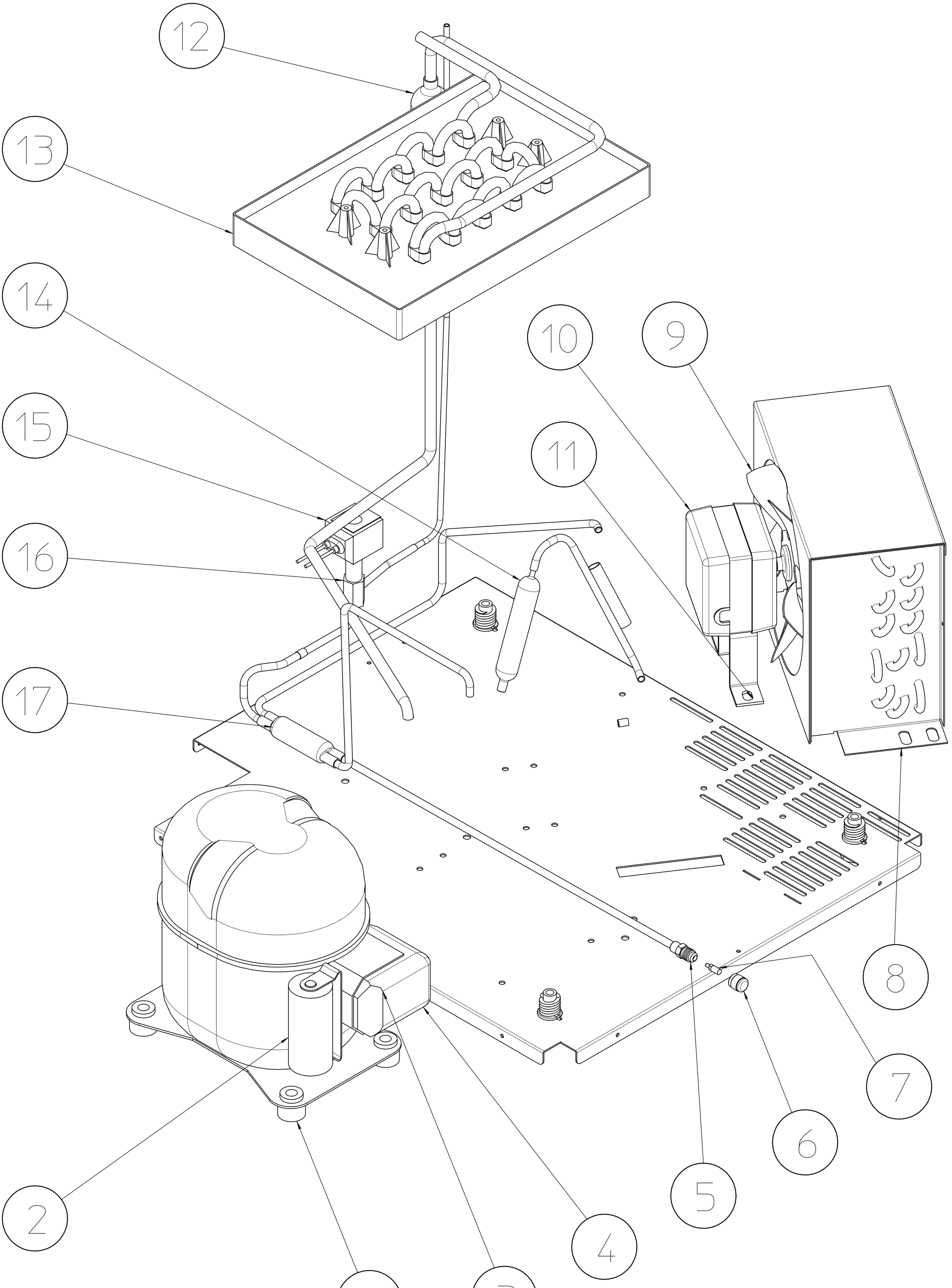
12
13
14
15
16
17
10
9
11
8
7
6
5
4
3
2
1

SDN 30 - SDN 35 - REFRIGERANT SYSTEM AIR COOLED - SISTEMA REFRIGERANTE RAFFR. AD ARIA
CIRCUIT FRIGORIFIQUE REFROID. PAR AIR - LUFTGEKÜHLT GEFRIERSYSTEM

ITEM NO POS. NO REP. NO REF. NO	PART NO CODICE REFERENCE STUECK NR	DESCRIPTION	DESCRIZIONE	DESIGNATION	BESCHREIBUNG
1	670105 03	COMPRESSOR	COMPRESSORE	COMPRESSEUR	KOMPRESSOR
2	EMB 2252347	START CAPACITOR	CONDENSATORE D'AVVIAMENTO	CAPACITE DE DEMARRAGE	START CONDENSATOR
3	EMB 2319069	PROTECTOR	PROTETTORE	PROTECTEUR	SCHUTZGERAT
4	EMB 2334116	RELAY	RELE'	RELAIS	RELAIS
5	650109 00	VALVE BODY	CORPO VALVOLA	CORPS DE VANNE	VENTILGEHAUSE
6	670012 00	VALVE PISTON	PISTONCINO VALVOLA	PISTON	VENTILKOLBEN
7	650106 00	VALVE CAP	CAPPUCCIO VALVOLA	CAPUCHON DE VANNE	VENTILKLAPPE
8	620285 00	AIR COOLED CONDENSER SDN 30	CONDENSATORE AD ARIA SDN 30	CONDENSEUR A AIR SDN 30	LUFT KONDENSATOR SDN 30
	620276 02	AIR COOLED CONDENSER SDN 35	CONDENSATORE AD ARIA SDN 35	CONDENSEUR A AIR SDN 35	LUFT KONDENSATOR SDN 35
9	620419 32	FAN BLADE	VENTOLA	HELICE	FLUGEL
10	620419 02	FAN MOTOR	MOTOVENTILATORE	MOTO-VENTILATEUR	LÜFTER GESAMTHEIT
11	620419 61	FAN MOTOR BRACKET	STAFFA VENTILATORE	SUPPORT MOTORVENTILATEUR	LÜFTER MOTOR TRAEGER
12	784444 09	ACCUMULATOR ASSY SDN 30	ASSIEME ACCUMULATORE SDN 30	ENS. ACCUMULATEUR SDN 30	SAMMLER UND SAUGLEITUNG. SDN 30
	784444 01	ACCUMULATOR ASSY SDN 35	ASSIEME ACCUMULATORE SDN 35	ENS. ACCUMULATEUR SDN 35	SAMMLER UND SAUGLEITUNG. SDN 35
13	784478 00	EVAPORATOR SDN 30	EVAPORATORE SDN 30	EVAPORATEUR SDN 30	VERDAMPFER SDN 30
	784479 00	EVAPORATOR SDN 35	EVAPORATORE SDN 35	EVAPORATEUR SDN 35	VERDAMPFER SDN 35
14	630003 05	DRIER	FILTRO DEUMIDIFICATORE	FILTRE DESHYDRATEUR	TROCKNER
15	620306 48	HOT GAS VALVE COIL	BOBINA VALVOLA GAS CALDO	BOBINE VANNE GAZ CHAUD	HEISSGAZ VENTIL SPULE
16	620306 14	HOT GAS VALVE BODY SDN 30	CORPO VALVOLA SDN 30	CORPS DE VANNE SDN 30	VENTILGEHAUSE SDN 30
	620306 22	HOT GAS VALVE BODY SDN 35	CORPO VALVOLA SDN 35	CORPS DE VANNE SDN 35	VENTILGEHAUSE SDN 35
17	630137 00	MECHANICAL FILTER	FILTRO MECCANICO	FILTRE MECANIQUE	MECHANISCHFILTERN

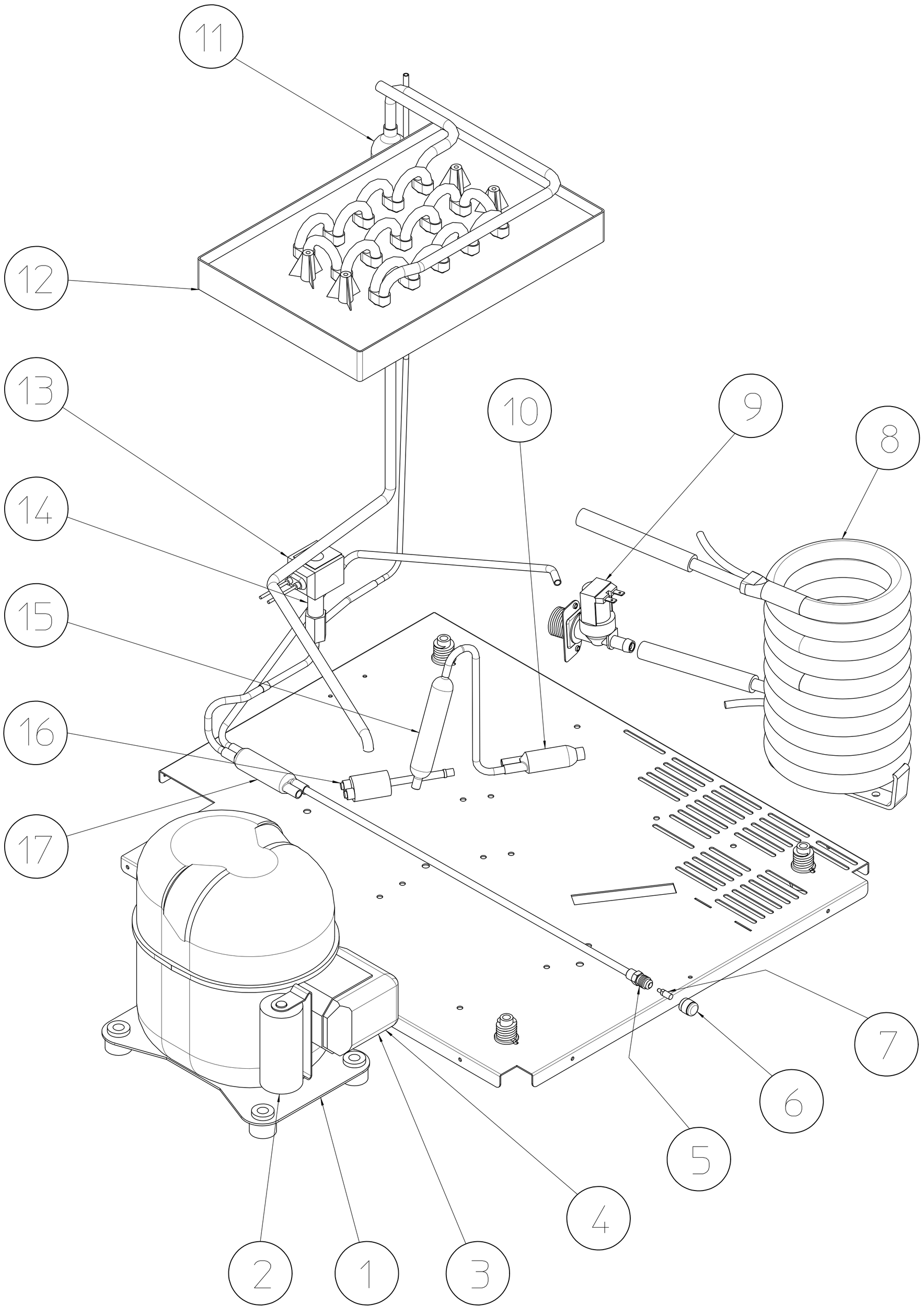
11
12
13
14
15
16
17
10
9
8
7
6
5
4
2
1
3

SDN 30 - SDN 35 - REFRIGERANT SYSTEM WATER COOLED - SISTEMA REFRIGERANTE RAFFR. AD ACQUA
CIRCUIT FRIGORIFIQUE REFROID. PAR EAU - WASSERGEKÜHLT GEFRIERSYSTEM

ITEM NO POS. NO REP. NO REF. NO	PART NO CODICE REFERENCE STUECK NR	DESCRIPTION	DESCRIZIONE	DESIGNATION	BESCHREIBUNG
1	670105 03	COMPRESSOR	COMPRESSORE	COMPRESSEUR	KOMPRESSOR
2	EMB 2252347	START CAPACITOR	CONDENSATORE D'AVVIAMENTO	CAPACITE DE DEMARRAGE	START CONDENSATOR
3	EMB 2319069	PROTECTOR	PROTETTORE	PROTECTEUR	SCHUTZGERAT
4	EMB 2334116	RELAY	RELE'	RELAIS	RELAIS
5	650109 00	VALVE BODY	CORPO VALVOLA	CORPS DE VANNE	VENTILGEHAUSE
6	670012 00	VALVE PISTON	PISTONCINO VALVOLA	PISTON	VENTILKOLBEN
7	650106 00	VALVE CAP	CAPPUCCIO VALVOLA	CAPUCHON DE VANNE	VENTILKLAPPE
8	620389 02	WATER COOLED CONDENSER	CONDENSATORE AD ACQUA	CONDENSEUR A EAU	WASSER KONDENSATOR
9	650105 70	WATER INLET VALVE	ELETTROVALVOLA	VANNE ARRIVÉE EAU	ELEKTROVENTIL
10	630020 01	MECHANICAL FILTER	FILTRO MECCANICO	FILTRE MECANIQUE	MECHANISCHFILTERN
11	784444 09	ACCUMULATOR ASSY SDN 30	ASSIEME ACCUMULATORE SDN 30	ENS. ACCUMULATEUR SDN 30	SAMMLER UND SAUGLEITUNG. SDN 30
	784444 01	ACCUMULATOR ASSY SDN 35	ASSIEME ACCUMULATORE SDN 35	ENS. ACCUMULATEUR SDN 35	SAMMLER UND SAUGLEITUNG. SDN 35
12	784478 00	EVAPORATOR SDN 30	EVAPORATORE SDN 30	EVAPORATEUR SDN 30	VERDAMPFER SDN 30
	784479 00	EVAPORATOR SDN 35	EVAPORATORE SDN 35	EVAPORATEUR SDN 35	VERDAMPFER SDN 35
13	620306 48	HOT GAS VALVE COIL	BOBINA VALVOLA GAS CALDO	BOBINE VANNE GAZ CHAUD	HEISSGAZ VENTIL SPULE
14	620306 14	HOT GAS VALVE BODY SDN 30	CORPO VALVOLA SDN 30	CORPS DE VANNE SDN 30	VENTILGEHAUSE SDN 30
	620306 22	HOT GAS VALVE BODY SDN 35	CORPO VALVOLA SDN 35	CORPS DE VANNE SDN 35	VENTILGEHAUSE SDN 35
15	630003 05	DRIER	FILTRO DEUMIDIFICATORE	FILTRE DESHYDRATEUR	TROCKNER
16	620499 01	PRESSURE CONTROL	PRESSOSTATO	PRESSOSTAT	PRESSOSTAT
17	630137 00	MECHANICAL FILTER	FILTRO MECCANICO	FILTRE MECANIQUE	MECHANISCHFILTERN

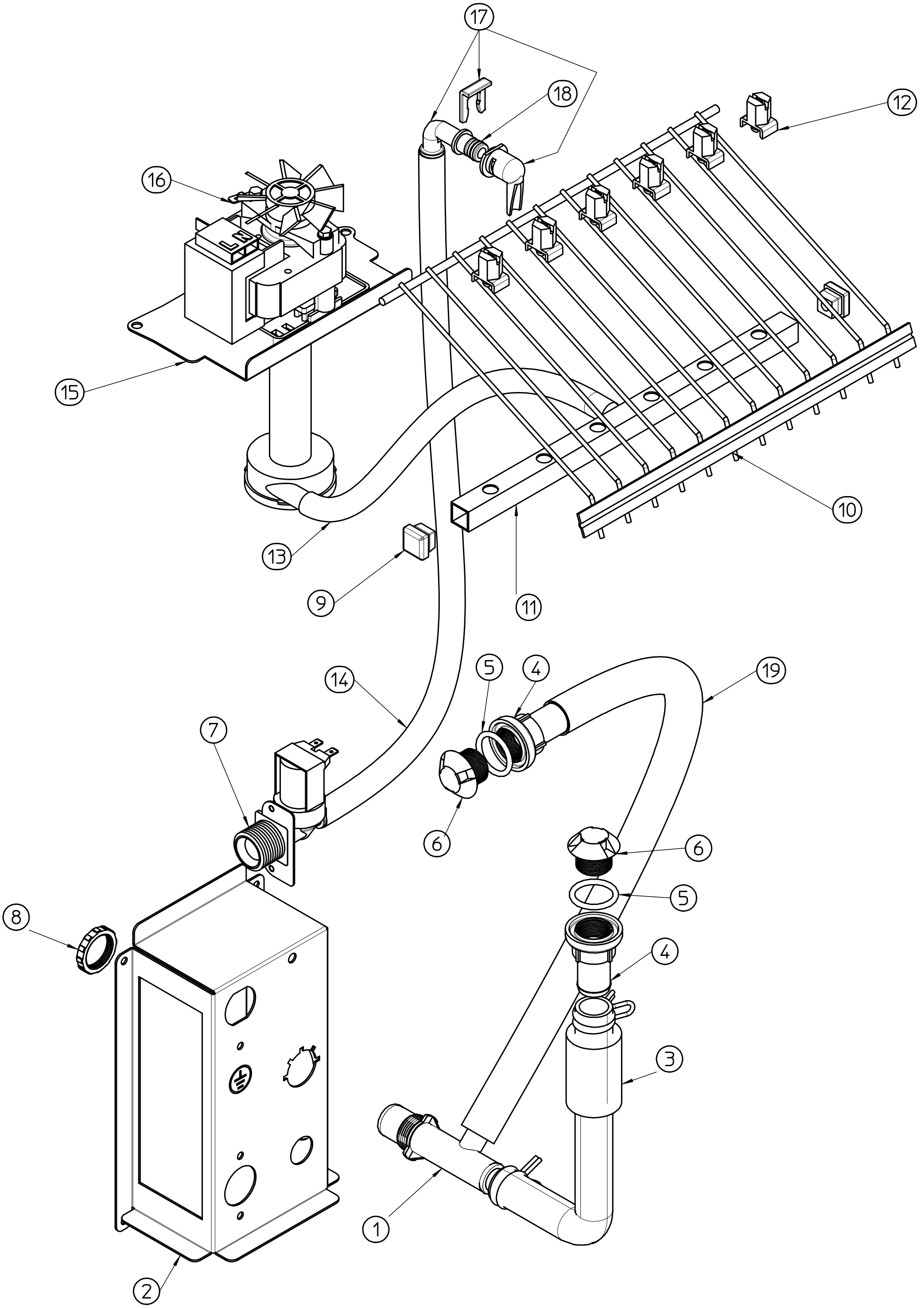
17
18
12
16
15
10
13
9
11
14
5
4
19
7
6
6
5
8
4
3
1
2

SDN 30 - SDN 35 -WATER SYSTEM - CIRCUITO IDRAULICO - CIRCUIT HYDRAULIQUE - WASSERSYSTEM-

up to/fino a/jusq'à/bis SDN 30 Serial Number MB 781714

up to/fino a/jusq'à/bis SDN 35 Serial Number MC 277979

ITEM NO POS. NO REP. NO REF. NO	PART NO CODICE REFERENCE STUECK NR	DESCRIPTION	DESCRIZIONE	DESIGNATION	BESCHREIBUNG
1	660224 00	WATER DRAIN FITTING	RACCORDO A "T"	RACCORD EVACUATION EAU	WASSERABFLUSSANSCHLUSSE
2	702526 00	METAL BRACKET FOR FITTING	SUPPORTO ATTACCHI	SUPPORT DE RACCORDS	METALLTRÄGER
3	610148 09	STORAGE BIN DRAIN	TUBO SCARICO CONTENITORE	TUYAU VIDANGE CONTENEUR	BEHÄLTERAUSLAUFSCHLAUCH
4	660219 02	BIN DRAIN	RACCORDO DI SCARICO	RACCORD EVACUATION	ABFLUSSROHR
5	640134 00	O-RING	GUARNIZIONE	JOINT TORIQUE	SIMMER RING
6	660211 01	DRAIN FILTER	FILTRO SCARICO	FILTRE EVACUATION EAU	ABFLUSSFILTER
7	650105 66	WATER INLET VALVE - AIR COOL.	ELETTROVALVOLA INGR. ACQUA	ELECTROV. ARR. EAU - REFR. AIR	WASSEREINLAUFVENTIL - LUFT
	650105 70	WATER INL. VAL. - WATER COOL.	ELETTROVALVOLA INGR. ACQUA	ELECTROV. ARR. EAU - REFR. EAU	WASSEREINLAUFVENTIL - WASSER
8	660535 00	PLASTIC RING NUT	GHIERA	COLLIER DE SERRAGE EN PLAST.	PLASTIKRING MUTTER
9	660557 00	SPRAY CUP	UGELLO SPRUZZATORE	BOUCHON POUR COLLECTEUR	STOPFEN
10	650707 00	ICE DEFLECTOR	GRIGLIA SCORRIMENTO CUBETTI	GRILLE GLISSEMENT GLAÇON	ABGLEITGRILL
11	650665 16	SPRAY BAR SDN 30	TUBO SPRUZZATORE SDN 30	COLLECTEUR SDN 30	KOLLEKTOR SDN 30
	650665 17	SPRAY BAR SDN 35	TUBO SPRUZZATORE SDN 35	COLLECTEUR SDN 35	KOLLEKTOR SDN 35
12	660558 00	SPRAY JET	SPRUZZATORI	GICLEURS	SPRÜHDÜSEN
13	610225 00	PUMP INLET WATER PIPE	TUBO MANDATA POMPA	TUYAU EVACUATION	ABFLUSSROHR
14	281900 01	PLASTIC TUBE - PER METER	TUBO INGRESSO ACQUA	TUYAU EN PLASTIQUE - POUR MT.	PLASTIK ROHR - PRO METER
15	724332 00	METAL BRACKET	SUPPORTO POMPA	SUPPORT METALLIQUE	METALTRAEGER
16	620433 00	WATER PUMP	POMPA	POMPE A EAU	WASSER PUMPE
17	793172 00R	WATER INLET ELBOW ASSY	ASS. INGR. ACQUA A GOMITO	ENS. ENTREE EAU COUDEE	ABGEWINKEL ZULAUFROHR
18	640041 31	O-RING	GUARNIZIONE	JOINT TORIQUE	SIMMER RING
19	610204 00	OVERFLOW DRAIN TUBE	TUBO SCARICO TROPPO PIENO	TUYAU VIDANGE TROP PLAIN	BEHÄLTER ABLAUF

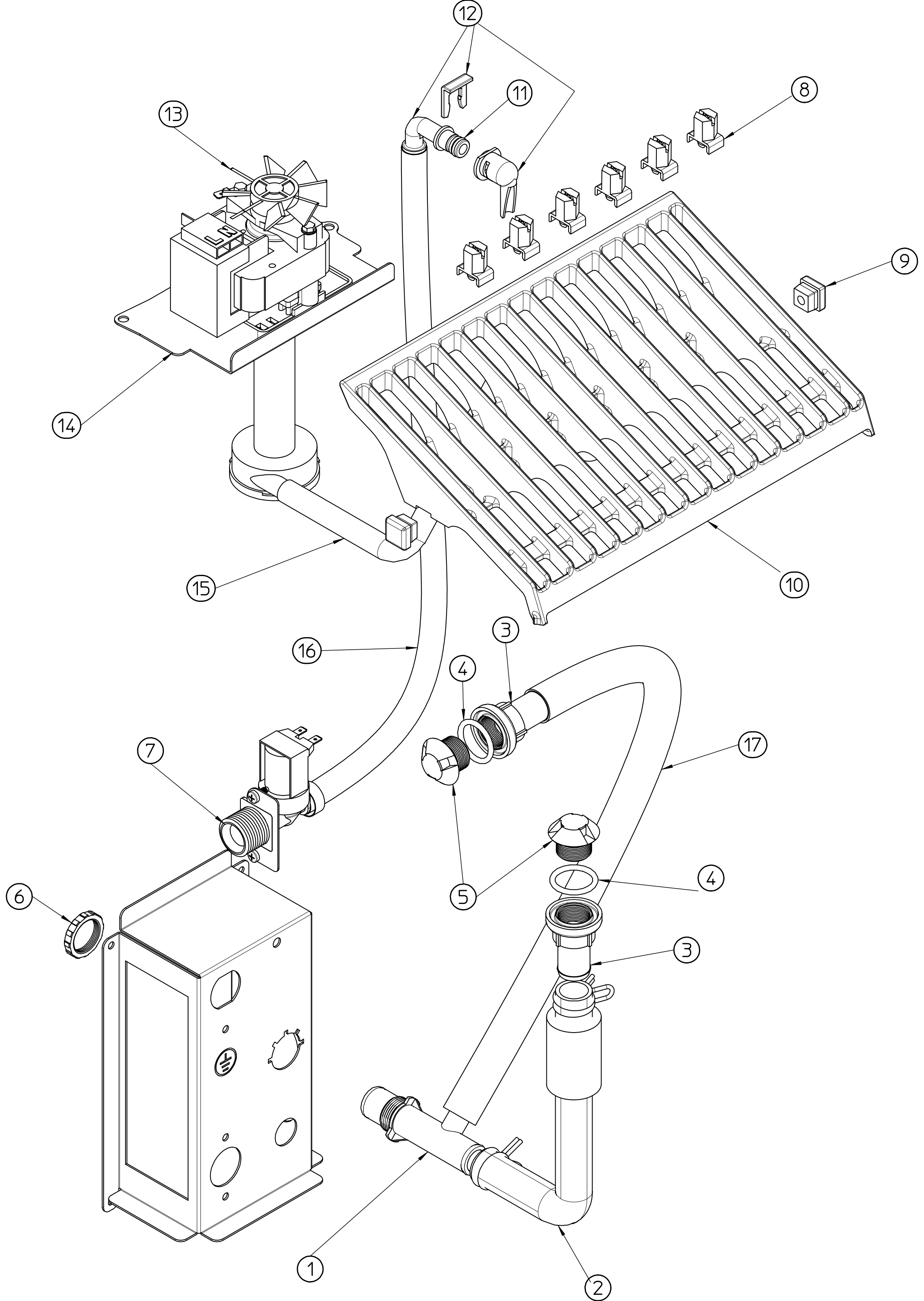
12
11
8
13
9
14
10
15
16
3
4
7
17
5
4
6
3
1
2

SDN 30 - SDN 35 -WATER SYSTEM - CIRCUITO IDRAULICO - CIRCUIT HYDRAULIQUE - WASSERSYSTEM-

from/dal/a partir du/von SDN 30 Serial Number MB 781715

from/dal/a partir du/von SDN 35 Serial Number MC 277980

ITEM NO POS. NO REP. NO REF. NO	PART NO CODICE REFERENCE STUECK NR	DESCRIPTION	DESCRIZIONE	DESIGNATION	BESCHREIBUNG
1	660224 00	WATER DRAIN FITTING	RACCORDO A "T"	RACCORD EVACUATION EAU	WASSERABFLUSSANSCHLUSSE
2	610148 09	STORAGE BIN DRAIN	TUBO SCARICO CONTENITORE	TUYAU VIDANGE CONTENEUR	BEHÄLTERAUSLAUFSCHLAUCH
3	660219 02	BIN DRAIN	RACCORDO DI SCARICO	RACCORD EVACUATION	ABFLUSSROHR
4	640134 00	O-RING	GUARNIZIONE	JOINT TORIQUE	SIMMER RING
5	660211 01	DRAIN FILTER	FILTRO SCARICO	FILTRE EVACUATION EAU	ABFLUSSFILTER
6	660535 00	PLASTIC RING NUT	GHIERA	COLLIER DE SERRAGE EN PLAST.	PLASTIKRING MUTTER
7	650105 66	WATER INLET VALVE - AIR COOL.	ELETTROVALVOLA INGR. ACQUA	ELECTROV. ARR. EAU - REFR. AIR	WASSEREINLAUFVENTIL - LUFT
	650105 70	WATER INL. VAL. - WATER COOL.	ELETTROVALVOLA INGR. ACQUA	ELECTROV. ARR. EAU - REFR. EAU	WASSEREINLAUFVENTIL - WASSER
8	660558 00	SPRAY JET	SPRUZZATORI	GICLEURS	SPRÜHDÜSEN
9	660557 00	SPRAY CUP	UGELLO SPRUZZATORE	BOUCHON POUR COLLECTEUR	STOPFEN
10	661029 02	SPRAY BAR & CHUTE SDN 30-35	ASS. PIASTRA SPRUZZ. SDN 30-35	ENS. RAMPE D'ARROS. SDN 30-35	SPRÜHSYSTEM SDN 30-35
11	640041 31	O-RING	GUARNIZIONE	JOINT TORIQUE	SIMMER RING
12	793172 00R	WATER INLET ELBOW ASSY	ASS. INGR. ACQUA A GOMITO	ENS. ENTREE EAU COUDEE	ABGEWINKEL ZULAUFROHR
13	620433 00	WATER PUMP	POMPA	POMPE A EAU	WASSER PUMPE
14	724332 00	METAL BRACKET	SUPPORTO POMPA	SUPPORT METALLIQUE	METALTRAEGER
15	610225 00	PUMP INLET WATER PIPE	TUBO MANDATA POMPA	TUYAU EVACUATION	ABFLUSSROHR
16	281900 01	PLASTIC TUBE - PER METER	TUBO INGRESSO ACQUA	TUYAU EN PLASTIQUE - POUR MT.	PLASTIK ROHR - PRO METER
17	610204 00	OVERFLOW DRAIN TUBE	TUBO SCARICO TROPPO PIENO	TUYAU VIDANGE TROP PLAIN	BEHÄLTER ABLAUF

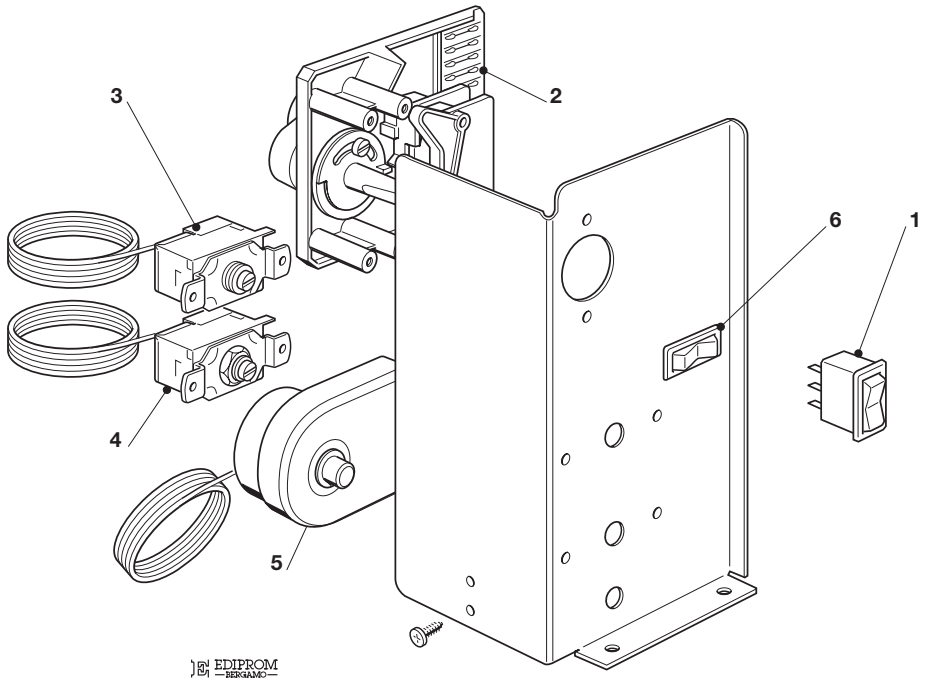

EDIPROM BERGAMO

0106.04

SDN 30 - SDN 35 - CONTROL BOX - SCATOLA DI CONTROLLO - BOITE ELECTRIQUE - SCHALTSCHRANK -

up to/fino a/jusq'à/bis SDN 30 Serial Number MB 778802

up to/fino a/jusq'à/bis SDN 35 Serial Number MC 275823

ITEM NO POS. NO REP. NO REF. NO	PART NO CODICE REFERENCE STUECK NR	DESCRIPTION	DESCRIZIONE	DESIGNATION	BESCHREIBUNG
1	620453 00	SWITCH	INTERRUTTORE LUMINOSO	INTERRUPTEUR LUMINEUX	SCHALTER
2	620441 00	TIMER	TIMER	MINUTERIE	TIMER
3	620201 01	EVAPORATOR THERMOSTAT	TERMOSTATO EVAPORATORE	THERMOSTAT EVAPORATEUR	VERDAMPFERTHERMOSTAT
4	630005 00	BIN THERMOSTAT	TERMOSTATO CONTENITORE	THERMOSTAT CONTENEUR	BEHÄLTER THERMOSTAT
5	620443 02	THERMOSTAT - SAFETY	TERMOSTATO DI SICUREZZA	THERMOSTAT DE SECURITÉ	SICHERHEITS THERMOSTAT
6	620442 02	SWITCH	COMMUTATORE UNIPOLARE	INTERRUPTEUR	UMSCHALTER

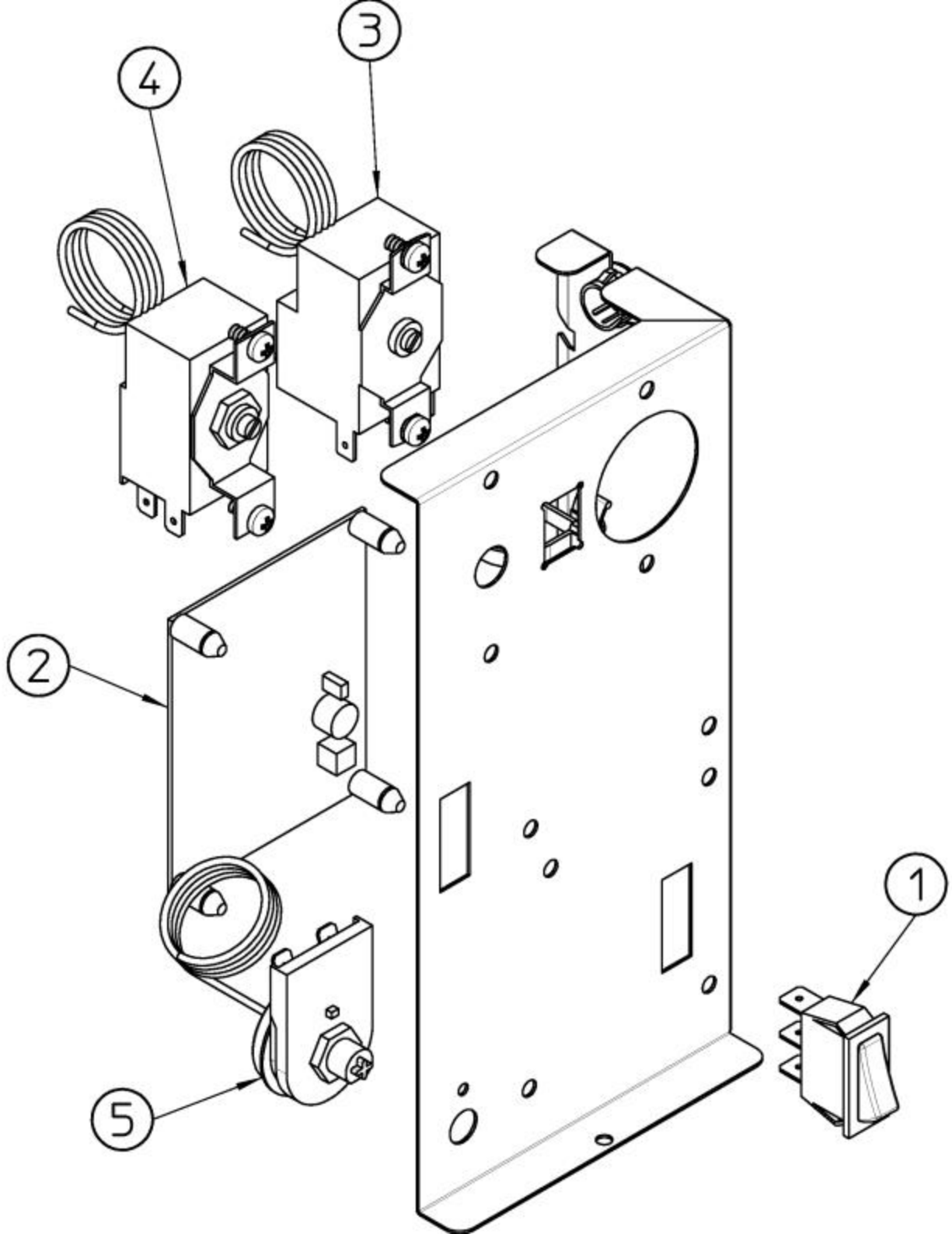
4
3
2
1
5

SDN 30 - SDN 35 - CONTROL BOX - SCATOLA DI CONTROLLO - BOITE ELECTRIQUE - SCHALTSCHRANK -

from/dal/a partir du/von SDN 30 Serial Number MB 778803

from/dal/a partir du/von SDN 35 Serial Number MC 275824

ITEM NO POS. NO REP. NO REF. NO	PART NO CODICE REFERENCE STUECK NR	DESCRIPTION	DESCRIZIONE	DESIGNATION	BESCHREIBUNG
1	620453 00	SWITCH	INTERRUTTORE LUMINOSO	INTERRUPTEUR LUMINEUX	SCHALTER
2	620507 00	ELECTRONIC TIMER	TIMER ELETTRONICO	MINUTERIE ELECTRONIQUE	ELEKTRONISCHER TIMER
3	630005 00	BIN THERMOSTAT	TERMOSTATO CONTENITORE	THERMOSTAT CONTENEUR	BEHÄLTER THERMOSTAT
4	620201 01	EVAPORATOR THERMOSTAT	TERMOSTATO EVAPORATORE	THERMOSTAT EVAPORATEUR	VERDAMPFERTHERMOSTAT
5	620443 02	THERMOSTAT - SAFETY	TERMOSTATO DI SICUREZZA	THERMOSTAT DE SECURITÉ	SICHERHEITS THERMOSTAT

SDN 30 - SDN 35 COMPRESSORS CHART - TABELLA COMPRESSORI
TABLEAU COMPRESSEURS - KOMPRESSOR KARTE

MODEL MODELLO MODELE MODELL	VOLTS TENSIONE TENSION SPANNUNG	COMPRESSOR MODEL MOD. COMPRESSORE TYPE COMPRESSEUR KOMPRESSOR TYP	COMPRESSOR COMPRESSORE COMPRESSEUR KOMPRESSOR	RELAY RELE' RELAIS RELAIS	PROTECTOR PROTETTORE PROTECTEUR SCHUTZGERAT	START CAPACITOR CONDENS. DI SPUNTO CAPACITE'/DEMARRAGE START KONDENSATOR
SDN 30-SDN 35	115/60/1	-	-	-	-	-
SDN 30-SDN 35	230/60/1	NEK6160Z	670105 04	EMB 2334121	EMB 2319095	EMB 2252346
SDN 30-SDN 35	230/50/1	NEK6160Z	670105 03	EMB 2334116	EMB 2319069	EMB 2252347

SDN 30 - SDN 35 ELECTRIC COMPONENTS CHART - TABELLA COMPONENTI ELETTRICI
TABLEAU COMPOSANTS ELECTRIQUE - ELEKTRISCHEKARTE

MODEL MODELLO MODELE MODELL	VOLTS TENSIONE TENSION SPANNUNG	WATER PUMP POMPA POMPE A EAU WASSER PUMPE	FAN MOTOR ONLY MOTORE VENTILATORE MOTEUR VENTILATEUR LUFTER MOTOR	WATER INLET VALVE VALV. INGR. ACQUA V.E.M. ARRIVEE' EAU WASSEREIN. VENTIL	HOT GAS VALVE VALVOLA GAS CALDO V.E.M. GAZ CHAUDS HEISSGAZ VENTIL	TIMER TIMER MINUTERIE TIMER
SDN 30-SDN 35	115/60/1	-	-	-	-	-
SDN 30-SDN 35	230/60/1	620433 01	620419 02	650105 66	620306 48	620507 00
SDN 30-SDN 35	230/50/1	620433 00	620419 02	650105 66	620306 48	620507 00



Via Pascoli, 22 - 20010 Pogliano Milanese (Milano) Italy
Tel. +39 02 93900215 (Commerciale - Sales Dept.)
Tel. +39 02 93960357 (Assistenza - Service Dept.)
Fax +39 02 93900226 (Commerciale - Sales Dept.)
Fax +39 02 93960366 (Assistenza - Service Dept.)
E-mail: sales@simag.it • service@simag.it
www.simag.it