Modello/Type: **60/30 FTG - FTG-CR - FTRG - FTRG-CR**

cod./num. 2531381.00

data/date: 07/06/2013

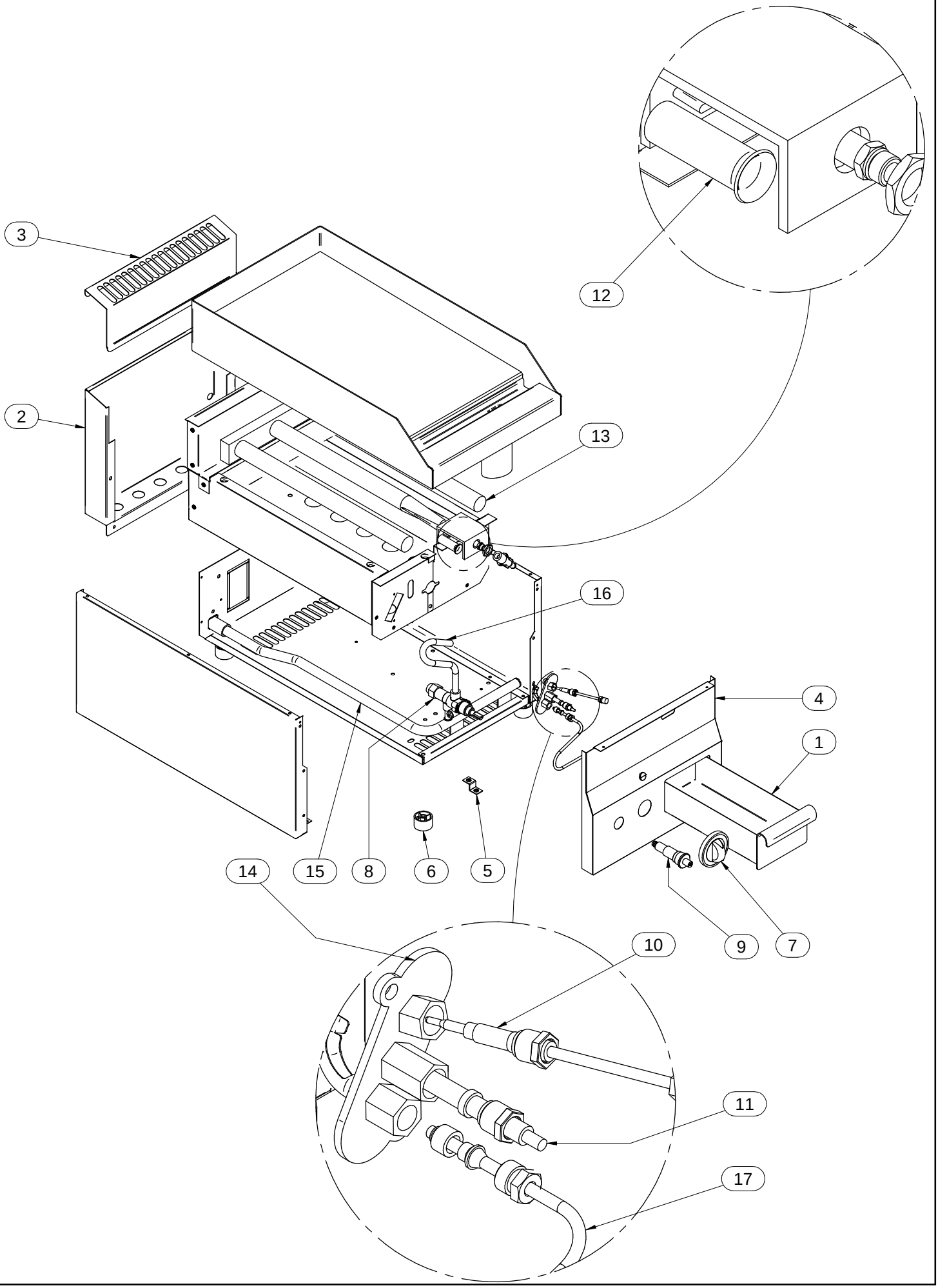

Modello Type:	60/30 FTG-CR - FTRG-CR				cod. / num.	2531383.00
					data / date:	07/06/2013
POS. ITEM	CODICE CODE	DESCRIZIONE	DESCRIPTION	DENOMINATION	BENENNUNG	NOTE / NOTES
1	611.803.00	CASSETTO	DRAWER	TIROIR	SCHUBLADE	
2	621.751.00	PANNELLO POSTERIORE	BACK PANEL	PANNEAU POSTERIEUR	HINTERBRETT	
3	611.730.00	ALZATINA	UPSTAND	DOSSERET	AUFKANTUNG	
4	256.057.00	CRUSCOTTO	CONTROL PANEL	BANDEAU	BEDIENBLENDE	
5	256.002.00	STAFFA FISSAGGIO CRUSCOTTO	CONTROL PANEL FIXING BRACKET	EQUERRE FIXATION BANDEAU	BEFESTIGUNGSWINKEL BEDIENBLENDE	
6	651.001.00	PIEDINO	FOOT	PIED	STELLFUSS	
7	612.031.00	MANOPOLA	KNOB	BOUTON	DREHKNOPF	
8	671.080.00	RUBINETTO GAS	GAS TAP	ROBINET GAZ	GASHAHN	
9	672.006.00	ACCENDITORE PIEZO	PIEZO LIGHTER	ALLUMEUR PIEZO	PIEZOZÜNDER	
10	672.001.00	TERMOCOPPIA	THERMOCOUPLE	THERMOCOUPLE	THERMOELEMENT	
11	256.060.00	CANDELA ACCENSIONE	IGNITION ELECTRODE	BOUGIE D'ALLUMAGE	KERZE SCHNELLBRENNER	
12	672.023.00	BOCCOLA REGOLAZIONE ARIA	AIR REGULATION BUSHING	BAGUE DE RÉGULATION AIR	LUFTREGLERBÜCHSE	
13	672.122.00	BRUCIATORE	BURNER	BRULEUR	BRENNER	
14	256.059.00	GRUPPO PILOTA	PILOT GROUP	GROUPE VEILLEUSE	ZÜNDBRENNER GRUPPE	
15	675.299.00	TUBO GAS	GAS PIPE	TUBE GAZ	GASROHR	
16	256.063.00	TUBO GAS	GAS PIPE	TUBE GAZ	GASROHR	
17	256.064.00	TUBO GAS	GAS PIPE	TUBE GAZ	GASROHR	
18						
19						
20						