SD 40 SC/M 30

R 22 A VERSION

SPARE PARTS LIST
CATALOGORIAMBI
CATALOGUE PIÈCES DÉTACHÉES
ERSATZTEILENKATALOG

REV. 01/1991

SD40 - SD40W - SC30 - SC30W - SM30 - SM30W

01 - 91

TAVOLA 1

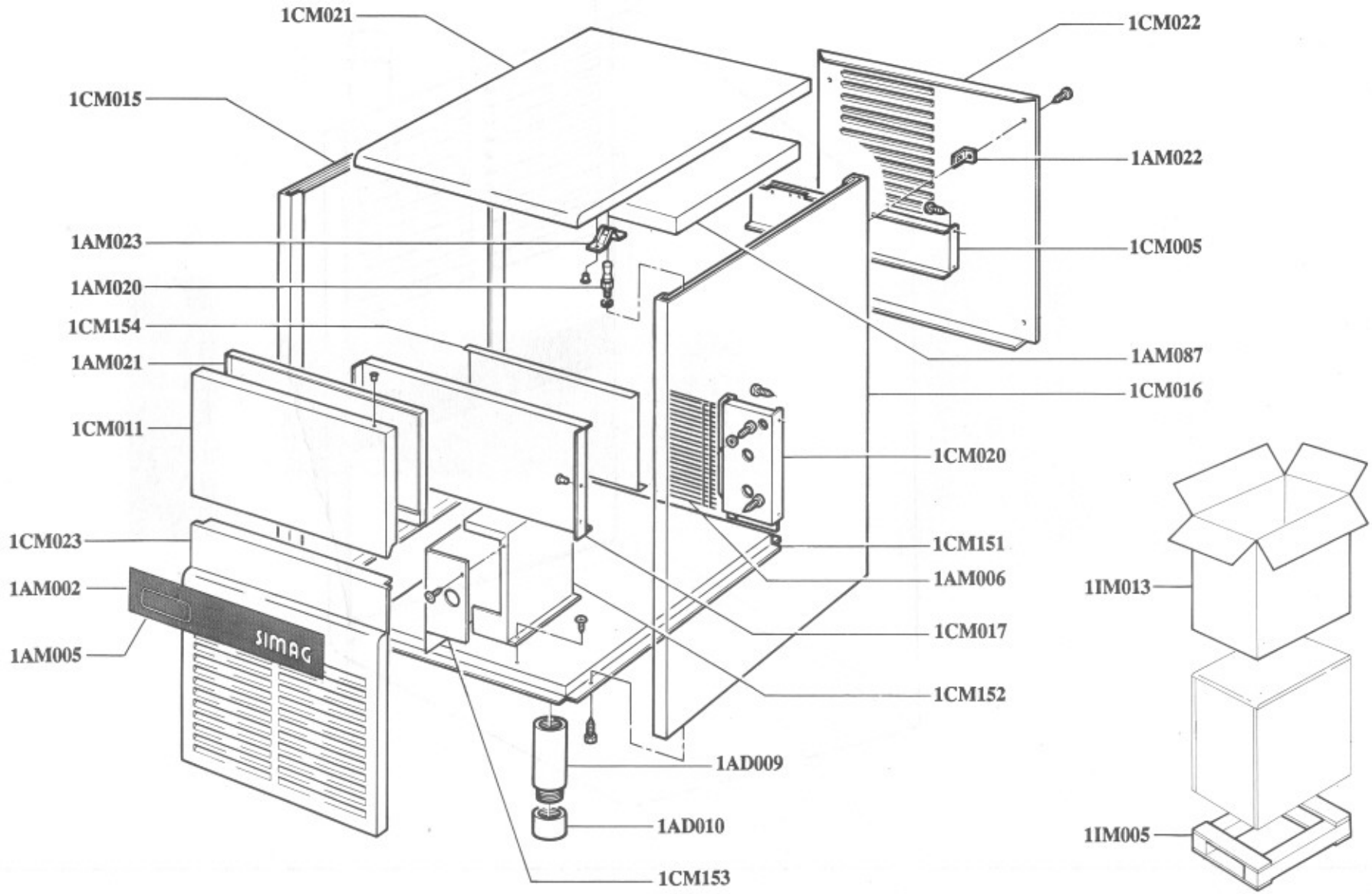

SD40 - SD40W - SC30 - SC30W - SM30 - SM30W

01 - 91

TAVOLA 1

COD.	DESCRIZIONE	DENOMINATION	DESCRIPTION	BESCHREIBUNG	DESCRIPCION
1AD009	Piede di supporto	*Pied*	Foot	*Gerätefuss*	Pie soporte
1AD010	Piede regolabile	*Pied réglable*	Levelling foot	*Gerätefuss*	Pie regulable
1AM002	Targa serigrafata	*Plaquette marque*	Name plate facia	*Markenschild*	Banda Simag
1AM005	Targhetta modello	*Plaquette d'identification*	Model badge	*Modellbezeichnung*	Etiqueta modelo
1AM006	Griglia posteriore	*Grille postérieure*	Rear grill	*Hinteres Belüftungsgitter*	Rejilla posterior
1AM020	Perno	*Axe*	Stud	*Stift*	Perno
1AM021	Controsportello	*Contreporte*	Door internal plate	*Hintere Seite Entnahmeklappe*	Contrapuerta
1AM022	Piastrine angolari	*Plaquette angulaires*	Retaining bracket	*Eckhalterung*	Ángulo
1AM023	Molla	*Ressort*	Retainer	*Feder*	Pinza perno
1AM087	Pannello isolante	*Panneau isolant*	Top panel insulation	*Isolierung*	Panel aislamiento
1CM005	Traverso supp. pompa	*Traverse support pompe*	Pump support panel	*Halterung Pumpe*	Soporte sup. bomba
1CM011	Sportello	*Porte*	Door	*Entnahmeklappe*	Puerta
1CM015	Fiancata sinistra	*Joue gauche*	Left side panel	*Linke Gehäuseseite*	Lateral izquierdo
1CM016	Fiancata destra	*Joue droite*	Right side panel	*Rechte Gehäuseseite*	Lateral derecho
1CM017	Traverso anteriore	*Traverse antérieure*	Front support	*Vordere Verbindungsstrebe*	Soporte frontal
1CM020	Supporto scarico	*Support vidange*	Exhaust support	*Auslaufhalterung*	Soporte conexiones
1CM021	Coperchio	*Couvercle*	Top panel	*Deckel*	Tapa superior
1CM022	Pannello posteriore	*Panneau postérieur*	Rear panel	*Hintere Abdeckung*	Panel posterior
1CM023	Pannello anteriore	*Panneau frontal*	Front panel	*Vordere Gehäuseabdeckung*	Panel frontal
1CM151	Piastra di base	*Plaque de base*	Base	*Grundplatte*	Base
1CM152	Scatola elettrica	*Boîtier électrique*	Electrical box	*Schaltkasten*	Caja eléctrica
1CM153	Coperchio sc. elettrica	*Couvercle boîtier elec.*	Cover electrical box	*Deckel Schaltkasten*	Tapa caja eléctrica
1CM154	Chiusura posteriore	*Fermeture posterièure*	Rear closing	*Hinterer Schluss*	Cerradura posterior
1IM005	Base imballo	*Socle*	Pallet	*Palette*	Palet
1IM013	Scatola imballo	*Caisse carton*	Carton	*Karton*	Embalaje

SD40 - SD40W - SC30 - SC30W - SM30 - SM30W

01 - 91

TAVOLA 2

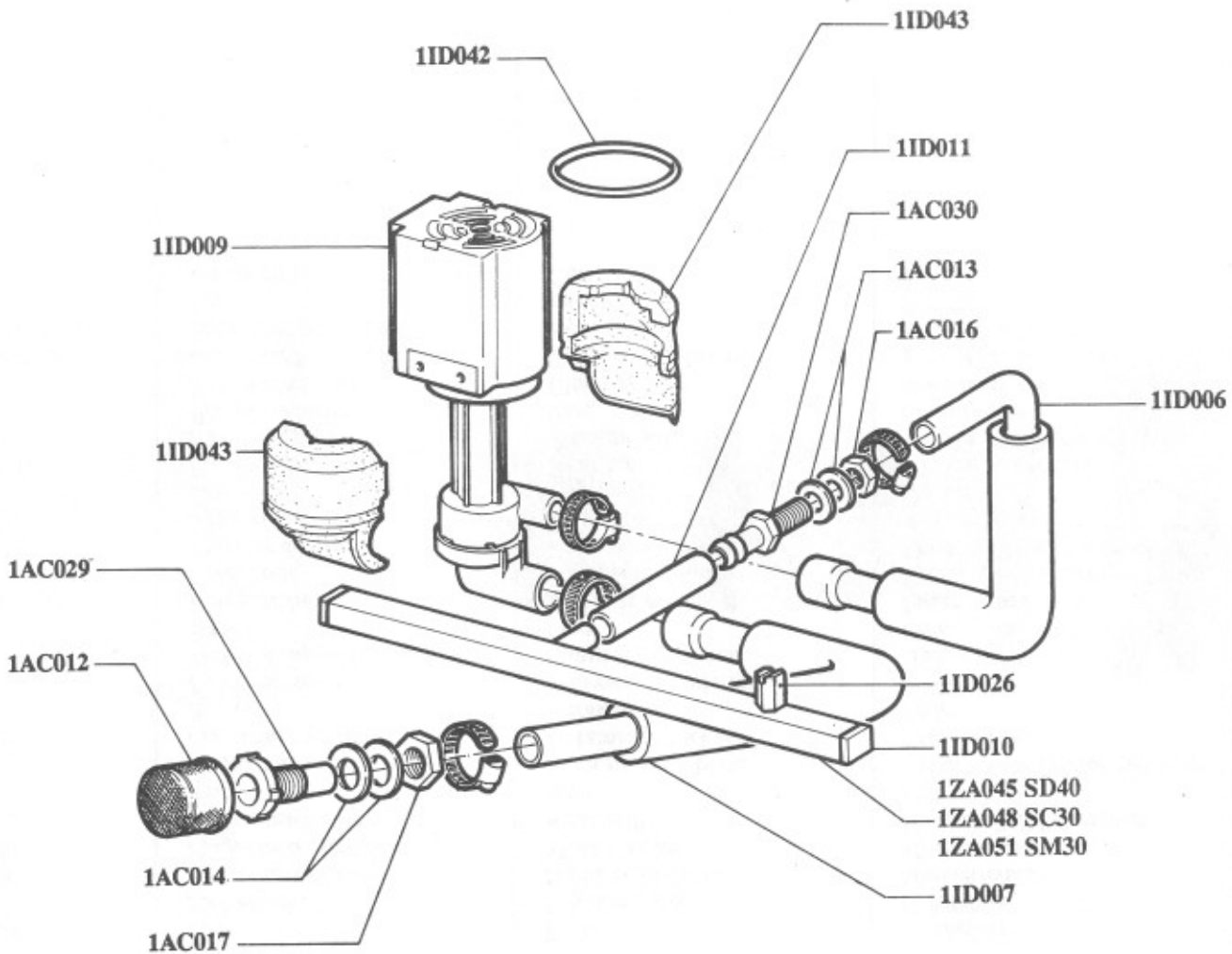

SD40 - SD40W - SC30 - SC30W - SM30 - SM30W

01 - 91

TAVOLA 2

COD.	DESCRIZIONE	DENOMINATION	DESCRIPTION	BESCHREIBUNG	DESCRIPCION
1AC012	Filtro aspirazione pompa	*Filtre aspiration pompe*	Pump feeding filter	*Pumpenansaugfilter*	Filtro asp. bomba
1AC013	Rondella	*Rondelle*	Washer	*Unterlegscheibe*	Arandela
1AC014	Rondella	*Rondelle*	Washer	*Unterlegscheibe*	Arandela
1AC016	Dado	*Ecrou*	Nut	*Mutter*	Tuerca
1AC017	Dado	*Ecrou*	Nut	*Mutter*	Tuerca
1AC029	Racc. aspirazione pompa	*Raccord aspiration pompe*	Pump feeding pipe-fitting	*Ansauganschlusstück*	Racord asp. bomba
1AC030	Racc. mandata pompa	*Raccord refoulement pompe*	Pump inlet water pipe-fitting	*Pumpenabflussanschlusstück*	Racord. imp. bom.
1ID006	Tubo mandata pompa	*Tuyau de refoulement pompe*	Pump inlet water pipe	*Pumpenabflusschlauch*	Tubo impul. bomba
1ID007	Tubo aspirazione pompa	*Tuyau d'aspiration pompe*	Pump feeding pipe	*Pumpenansaugschlauch*	Tubo asp. bomba
1ID009	Pompa	*Pompe*	Pump	*Pumpe*	Bomba
1ID010	Tappo per collettore	*Bouchon pour collecteur*	Plug manifold	*Stopfen*	Tapón colector
1ID011	Tubo alimentazione collettore	*Tuyau d'alimentation eau*	Spray bar feeding pipe	*Anschlusschlauch Kollektor*	Tubo aliment. dist.
1ID026	Spruzzatori	*Gicleurs*	Sprayers	*Sprühdüsen*	Aspersores
1ID042	Anello O.R.	*Joint torique*	O-ring	*O-ring*	Junta
1ID043	Isolamento pompa	*Coupelle pour pompe*	Pump cover insulation	*Pumpenisolierung*	Aislamiento bomba
1ZA045 SD40	Collettore	*Collecteur*	Spray bar	*Kollektor*	Colector
1ZA048 SC30	Collettore	*Collecteur*	Spray bar	*Kollektor*	Colector
1ZA051 SM30	Collettore	*Collecteur*	Spray bar	*Kollektor*	Colector

SD40 - SD40W - SC30 - SC30W - SM30 - SM30W

01 - 91

TAVOLA 3

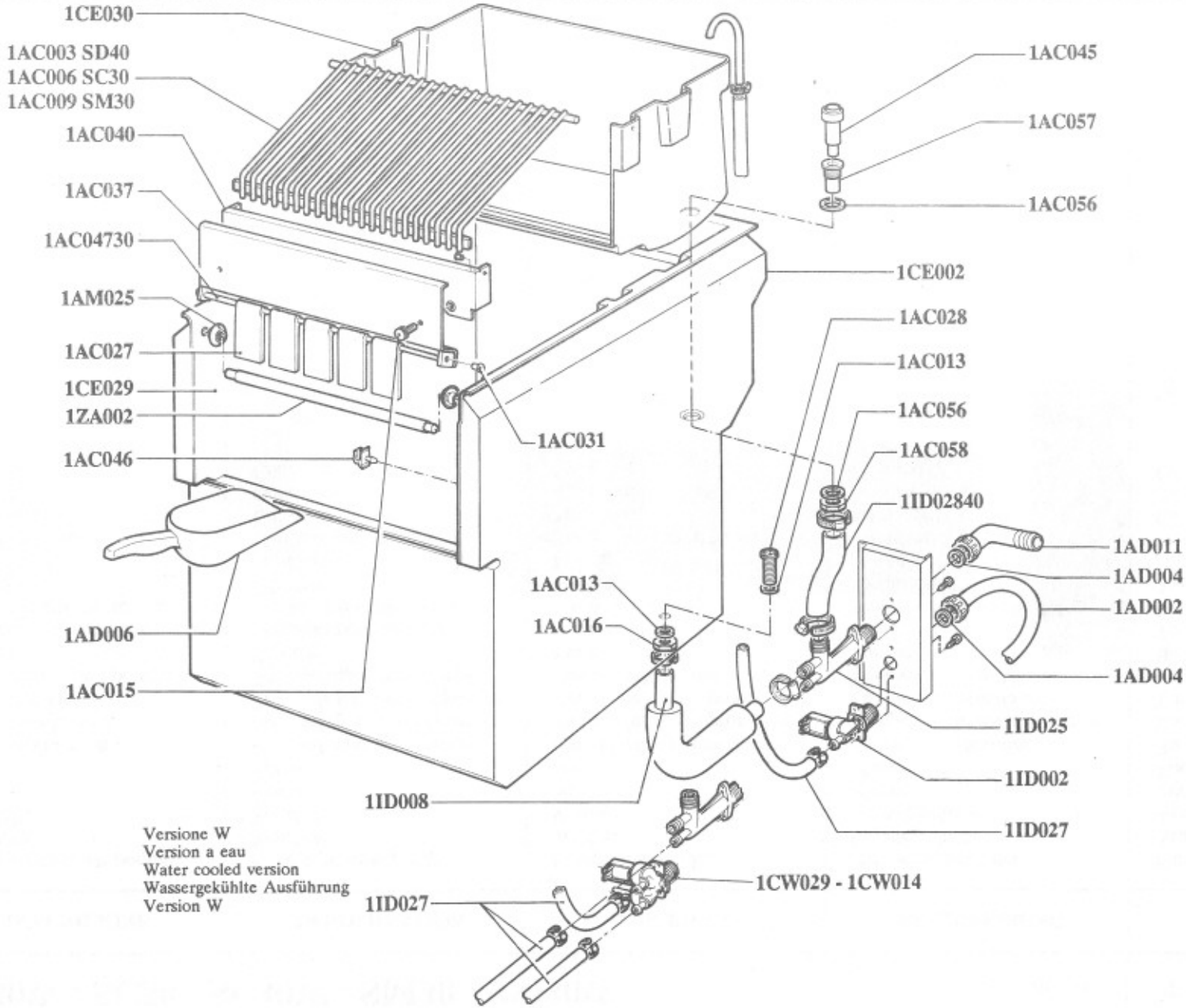

SD40 - SD40W - SC30 - SC30W - SM30 - SM30W

01 - 91

TAVOLA 3

COD.	DESCRIZIONE	DENOMINATION	DESCRIPTION	BESCHREIBUNG	DESCRIPCION
1AC003 SD40	Griglia scorrimento cubetti	*Grille glissement glaçons*	Cube deflector	*Abgleitgrill*	Rejilla caida cubitos
1AC006 SC30	Griglia scorrimento cubetti	*Grille glissement glaçons*	Cube deflector	*Abgleitgrill*	Rejilla caida cubitos
1AC009 SM30	Griglia scorrimento cubetti	*Grille glissement glaçons*	Cube deflector	*Abgleitgrill*	Rejilla caida cubitos
1AC013	Rondella	*Rondelle*	Washer	*Unterlegscheibe*	Arandela
1AC015	Vite godronata	*Vis moletée*	Knurled screw	*Schraube*	Tornillo
1AC016	Dado	*Ecrou*	Nut	*Mutter*	Tuerca
1AC027	Bandierina	*Lamelle*	Spray curtain flap	*Abdeckklappe*	Aleta
1AC028	Racc. scarico contenitore	*Raccord vidange conteneur*	Bin exhaust pipe fitting	*Anschlüsstück Behälter*	Racord desag. deposito
1AC031	Bottone	*Bouton*	Bar pins	*Befestigung Achse*	Tapón
1AC037	Supporto bandierine	*Support lamelles*	Spray curtain support	*Abdeckklappen Halterung*	Soporte aletas
1AC040	Supporto evaporatore	*Support évaporateur*	Evaporator support	*Verdampferauflage*	Soporte evaporador
1AC045	Troppo pieno	*Trop-plein*	Overflow exhaust pipe	*Überlauf*	Rebosadero
1AC046	Fermatubo	*Attache de tube*	Pipe fixing	*Behälterthermostathalter.*	Fijación tubos
1AC04730	Tubo ottone	*Tube en laiton*	Spray curtain bar	*Abdeckklappenhalter*	Barra aletas
1AC056	Rondella	*Rondelle*	Washer	*Unterlegscheibe*	Arandela
1AC057	Raccordo scarico t. pieno	*Raccord écoulem. trop-plein*	Overflow exhaust	*Überlaufrohr*	Racord desag. rebosad
1AC058	Dado	*Ecrou*	Nut	*Mutter*	Tuerca
1AD002	Tubo alimentazione acqua	*Tuyau d'alimentation eau*	Water supply pipe	*Wasseranschlusschlauch*	Tubo aliment. agua
1AD004	Guarnizione	*Joint*	Gasket	*Dichtung*	Junta
1AD006	Sessola	*Sasse*	Ice scoop	*Eisschaufel*	Pala
1AD011	Curva con ghiera	*Coude avec bague*	Elbow with ring nut	*Krümmer*	Codo
1AM025	Passatubo	*Passe-tuyau*	Retainer for door bar	*Halterung*	Pasatubo
1CE002	Isolamento cella	*Isolation*	Insulation	*Isolierung*	Aislamiento
1CE029	Cella esterna	*Chambre exterieure*	Bin	*Zelle extern*	Cuba
1CE030	Cella interna	*Chambre intérieure*	Bin	*Zelle intern*	Cubeta interna
1CW014	Regolatore	*Regolateur*	Regulator	*Regler*	Restrictor
1CW029	Elettrovalvola doppia	*Electrovanne double*	Double electric valve	*Elektroventil*	Electroválvula doble
1ID002	Elettrovalvola	*Electrovanne*	Electric valve	*Elektromagnetventil*	Electroválvula
1ID008	Tubo scarico contenitore	*Tuyau vidange conteneur*	Bin exhaust pipe	*Behälterauslaufschlauch*	Tubo desag. depósito
1ID025	Scarico acqua	*Ecoulement eau*	Water exhaust	*Wasserablauf*	Desagüe
1ID027	Tubo	*Tube*	Pipe	*Schlauch*	Tubo
1ID02840	Tubo	*Tube*	Pipe	*Schlauch*	Tubo
1ZA002	Asta sportello	*Tige porte*	Door support bar	*Klappenachse*	Tubo soporte puerta

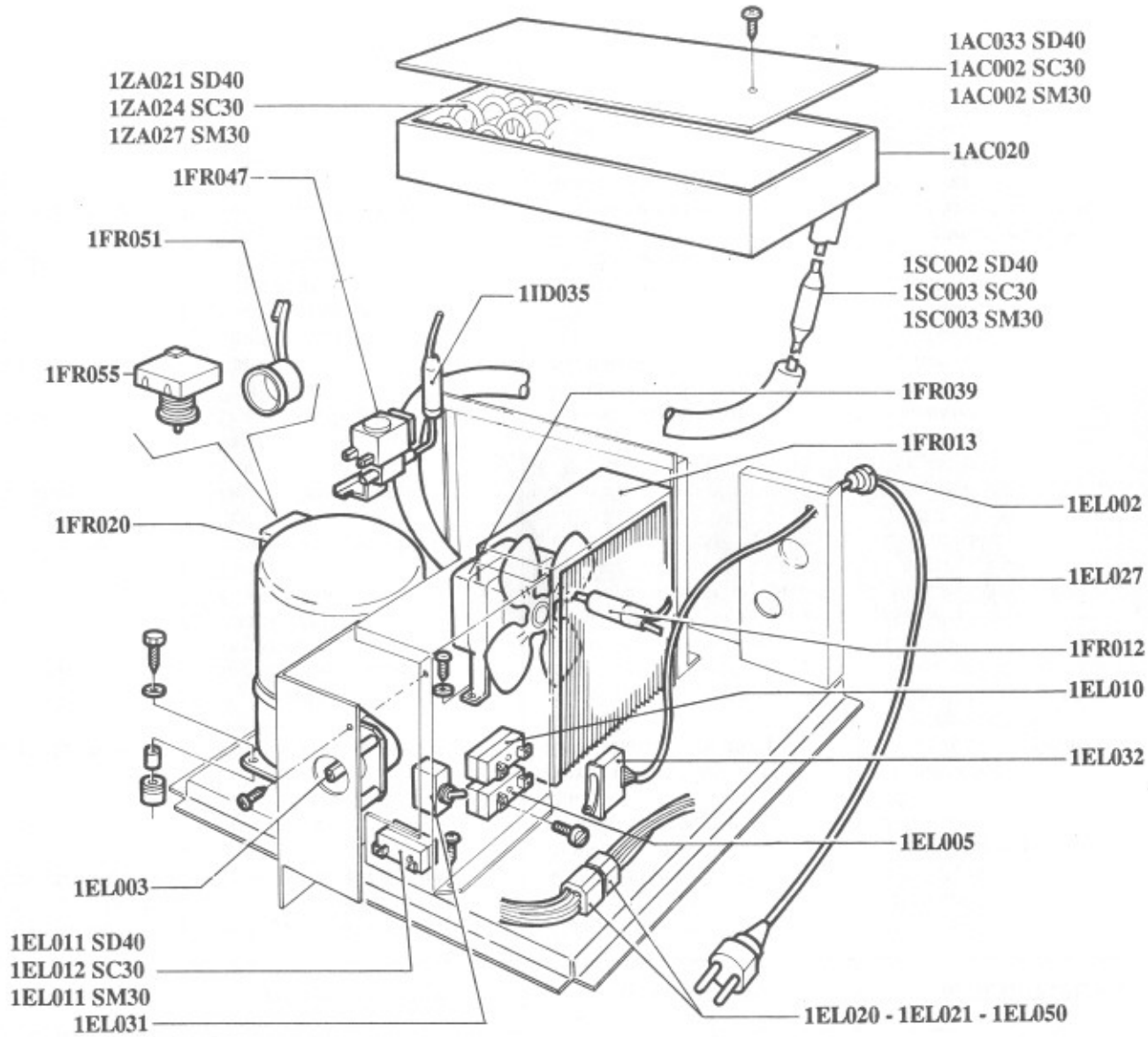
1AC033 SD40
1AC002 SC30
1AC002 SM30
1ZA021 SD40
1ZA024 SC30
1ZA027 SM30
1AC020
1FR047
1FR051
1ID035
1SC002 SD40
1SC003 SC30
1SC003 SM30
1FR055
1FR039
1FR013
1EL002
1FR020
1EL027
1FR012
1EL010
1EL032
1EL005
1EL003
1EL011 SD40
1EL012 SC30
1EL011 SM30
1EL031
1EL020 - 1EL021 - 1EL050

SD40 - SC30 - SM30

01 - 91

TAVOLA 4

COD.	DESCRIZIONE	DENOMINATION	DESCRIPTION	BESCHREIBUNG	DESCRIPCION
1AC002 SC30	Coprievaporatore	*Cache-évaporateur*	Evaporator top	*Verdampferabdeckung*	Tapa evaporador
1AC002 SM30	Coprievaporatore	*Cache-évaporateur*	Evaporator top	*Verdampferabdeckung*	Tapa evaporador
1AC020	Guarnizione evaporatore	*Joint d'évaporateur*	Evaporator packing	*Verdampferdichtung*	Bandeja evaporador
1AC033 SD40	Coprievaporatore	*Cache-évaporateur*	Evaporator top	*Verdampferabdeckung*	Tapa evaporador
1EL002	Fissacavo	*Serre-câble*	Cable terminal ring	*Kabelklemme*	Tuerca fijación cab.
1EL003	Timer	*Minuterie*	Timer	*Timer*	Temporizador
1EL005	Pressostato	*Pressostat*	Pressure gauge	*Druckwächter*	Presostato
1EL010	Termostato contenitore	*Thermostat conteneur*	Bin thermostat	*Behälterthermostat*	Termostato evaporador
1EL011 SD40	Termostato evaporatore	*Thermostat évaporateur*	Evaporator thermostat	*Verdampferthermostat*	Termostato evaporador
1EL011 SM30	Termostato evaporatore	*Thermostat évaporateur*	Evaporator thermostat	*Verdampferthermostat*	Intercambiador
1EL012 SC30	Termostato evaporatore	*Thermostat évaporateur*	Evaporator thermostat	*Verdampferthermostat*	Intercambiador
1EL020	Cablaggio	*Câblage*	Wiring	*Verkabelung*	Cableado
1EL021	Cablaggio	*Câblage*	Wiring	*Verkabelung*	Cableado
1EL027	Cavo alimentazione	*Câble d'alimentation*	Electric cable	*Kabel*	Cable alimentación
1EL031	Interruttore	*Interrupteur*	Switch	*Schalter*	Interruptor limpieza
1EL032	Interruttore luminoso	*Interrupteur lumineux*	Switch	*Schalter*	Interruptor ON/OFF
1EL050	Cablaggio	*Câblage*	Wiring	*Verkabelung*	Cableado
1FR012	Filtro	*Filtre*	Filter	*Filter*	Filtro
1FR013	Condensatore	*Condenseur*	Air condenser	*Kondensator*	Condensador
1FR020	Compressore	*Compresseur*	Compressor	*Kompressor*	Compresor
1FR039	Motoventilatore	*Moto-ventilateur*	Electric fan	*Lüfter*	Motoventilador
1FR047	Elettrovalvola gas	*Electrovanne gaz*	Gas electric valve	*Gas Elektromagnetventil*	Electroválvula gaz
1FR051	Protettore termico	*Protection thermique*	Thermic protector	*Thermoschutz*	Protector térmico
1FR055	Relè avviamento	*Relais démarrage*	Starting relay	*Anlaufrelais*	Relé arranque
1ID035	Filtro meccanico	*Filtre mécanique*	Filtre	*Filter*	Filtro
1SC002 SD40	Boiler	*Boiler*	Heat exchanger	*Austauscher*	Intercambiador
1SC003 SC30	Boiler	*Boiler*	Heat exchanger	*Austauscher*	Intercambiador
1SC003 SM30	Boiler	*Boiler*	Heat exchanger	*Austauscher*	Intercambiador
1ZA021 SD40	Evaporatore	*Evaporateur*	Evaporator	*Verdampfer*	Evaporador
1ZA024 SC30	Evaporatore	*Evaporateur*	Evaporator	*Verdampfer*	Evaporador
1ZA027 SM30	Evaporatore	*Evaporateur*	Evaporator	*Verdampfer*	Evaporador

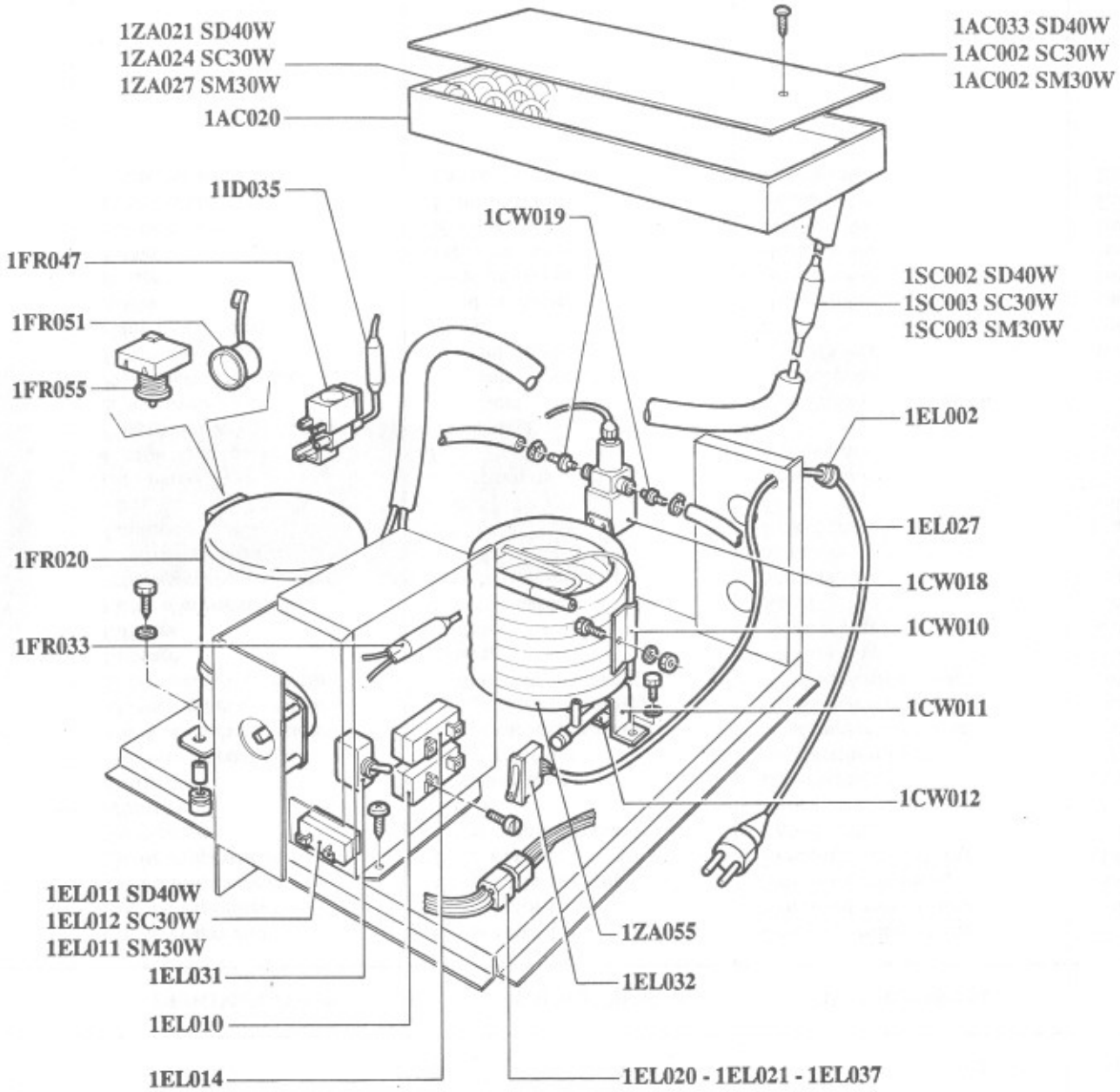
1ZA021 SD40W
1ZA024 SC30W
1ZA027 SM30W
1AC020
1AC033 SD40W
1AC002 SC30W
1AC002 SM30W
1ID035
1CW019
1FR047
1FR051
1FR055
1SC002 SD40W
1SC003 SC30W
1SC003 SM30W
1EL002
1EL027
1FR020
1CW018
1FR033
1CW010
1CW011
1CW012
1EL011 SD40W
1EL012 SC30W
1EL011 SM30W
1ZA055
1EL031
1EL032
1EL010
1EL014
1EL020 - 1EL021 - 1EL037

SD40W - SC30W - SM30W

01 - 91

TAVOLA 5

COD.	DESCRIZIONE	DENOMINATION	DESCRIPTION	BESCHREIBUNG	DESCRIPCION
1AC002 SC30W	Coprievaporatore	*Cache-évaporateur*	Evaporator top	*Verdampferabdeckung*	Tapa evaporador
1AC002 SM30W	Coprievaporatore	*Cache-évaporateur*	Evaporator top	*Verdampferabdeckung*	Tapa evaporador
1AC020	Guarnizione evaporatore	*Joint d'évaporateur*	Evaporator packing	*Verdampferdichtung*	Bandeja evaporator
1AC033 SD40W	Coprievaporatore	*Cache-évaporateur*	Evaporator top	*Verdampferabdeckung*	Tapa evaporador
1CW010	Piastrina bulbo termostato	*Plaquette*	Condenser thermostat bracket	*Thermostatfühler Halterung*	Fij-bulbo termostato
1CW011	Squadretta fiss. condensatore	*Equerre fixation cond.*	Condenser support	*Kondensator Halterung*	Escuadra fij. cond.
1CW012	Squadretta per condensatore	*Equerre fixation cond.*	Condenser support	*Kondensator Halterung*	Escuadra fij. cond.
1CW018	Valvola pressostatica	*Soupape pressostatique*	Water valve	*Wasserventil*	Valvula presostatica
1CW019	Portagomma	*Support caoutchouc*	Rubber fixing	*Halterung*	Junta de goma
1EL002	Fissacavo	*Serre-câble*	Cable terminal ring	*Kabelklemme*	Tuerca fij. cab.
1EL010	Termostato contenitore	*Thermostat conteneur*	Bin thermostat	*Behälterthermostat*	Termostato depósito
1EL011 SD40W	Termostato evaporatore	*Thermostat évaporateur*	Evaporator thermostat	*Verdampferthermostat*	Termostato evaporador
1EL011 SM30W	Termostato evaporatore	*Thermostat évaporateur*	Evaporator thermostat	*Verdampferthermostat*	Termostato evaporador
1EL012 SC30W	Termostato evaporatore	*Thermostat évaporateur*	Evaporator thermostat	*Verdampferthermostat*	Termostato evaporador
1EL014	Termostato condensazione	*Thermostat condensation*	Condenser thermostat	*Verflüssigerthermostat*	Termostato condensador
1EL020	Cablaggio	*Câblage*	Wiring	*Verkabelung*	Cableado
1EL021	Cablaggio	*Câblage*	Wiring	*Verkabelung*	Cableado
1EL027	Cavo alimentazione	*Câble d'alimentation*	Electric cable	*Kabel*	Cable alimentación
1EL031	Interruttore	*Interrupteur*	Switch	*Schalter*	Interruptor limpieza
1EL032	Interruttore luminoso	*Interrupteur lumineux*	Switch	*Schalter*	Interruptor ON/OFF
1EL037	Cablaggio	*Câblage*	Wiring	*Verkabelung*	Cableado
1FR020	Compressore	*Compresseur*	Compressor	*Kompressor*	Compresor
1FR033	Filtro	*Filtre*	Filter	*Filter*	Filtro
1FR047	Elettrovalvola gas	*Electrovanne gaz chaud*	Hot gas valve	*Heissgasventil*	Electroválvula gaz
1FR051	Protettore termico	*Protection thermique*	Thermic protector	*Thermoschutz*	Protector térmico
1FR055	Relè avviamento	*Relais de démarrage*	Starting relay	*Anlaufrelais*	Relé arranque
1ID035	Filtro meccanico	*Filtre mécanique*	Filter	*Filter*	Filtro
1SC002 SD40W	Boiler	*Boiler*	Heat exchanger	*Austauscher*	Intercambiador
1SC003 SC30W	Boiler	*Boiler*	Heat exchanger	*Austauscher*	Intercambiador
1SC003 SM30W	Boiler	*Boiler*	Heat exchanger	*Austauscher*	Intercambiador
1ZA021 SD40W	Evaporatore	*Évaporateur*	Evaporator	*Verdampfer*	Evaporador
1ZA055	Condensatore	*Condenseur*	Water condenser	*Verflüssiger*	Condensador
1ZA024 SC30W	Evaporatore	*Evaporateur*	Evaporator	*Verdampfer*	Evaporador
1ZA027 SM30W	Evaporatore	*Evaporateur*	Evaporator	*Verdampfer*	Evaporador