Mod./Type: **_70/80 TPG... - _70/... TP...G... - _90/... TP...G...**

EXTREME

cod./num. 2531657.00

data/date: 20/05/2014

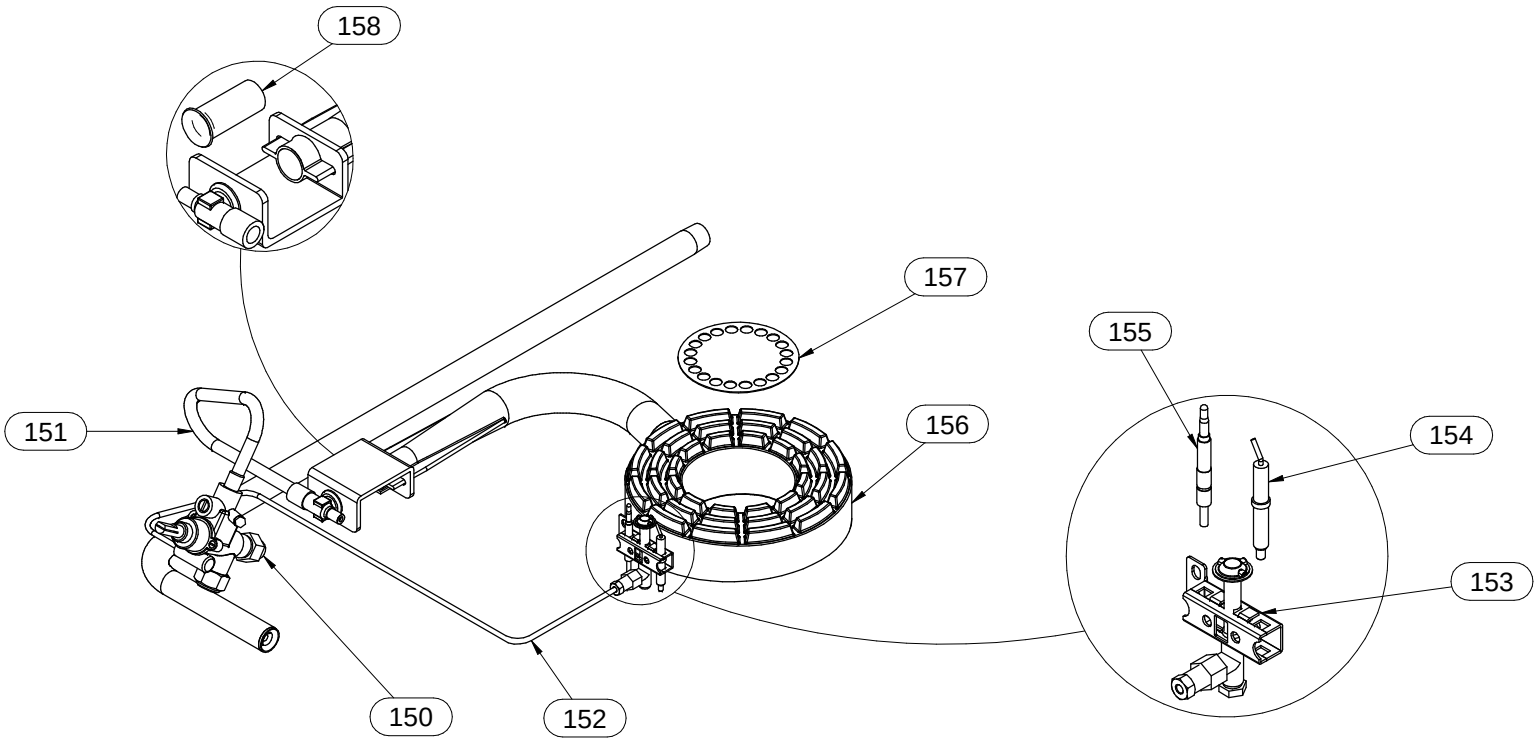

Mod./Type: **_90/... TPFG**
EXTREME

cod./num. 2531724.00
data/date: 24/06/2014

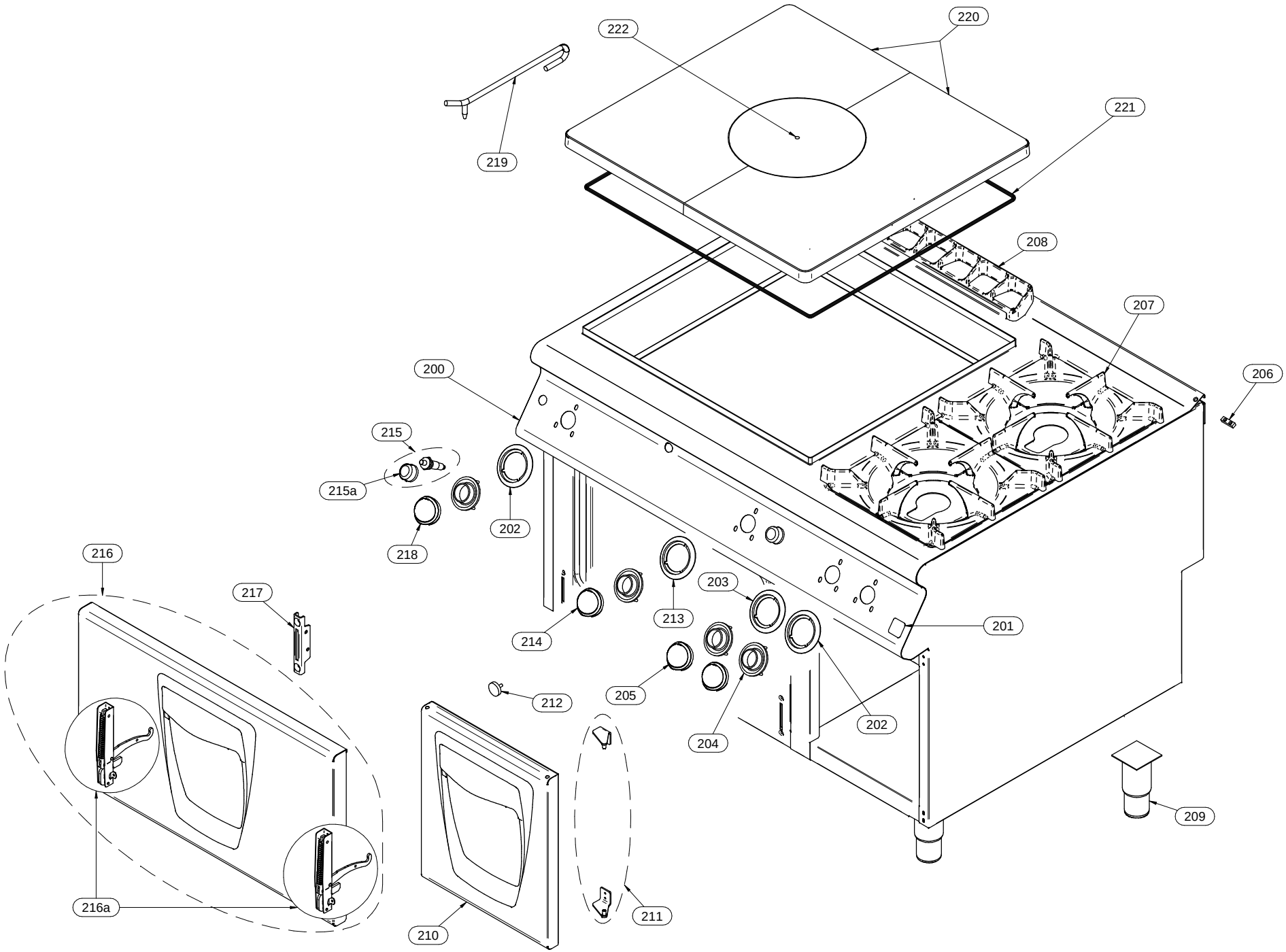

Mod./Type: **_70/... ...FG... - _90/... ...FG...**

GAS OVEN

cod./num. 2531592.00

data/date: 01/11/2013

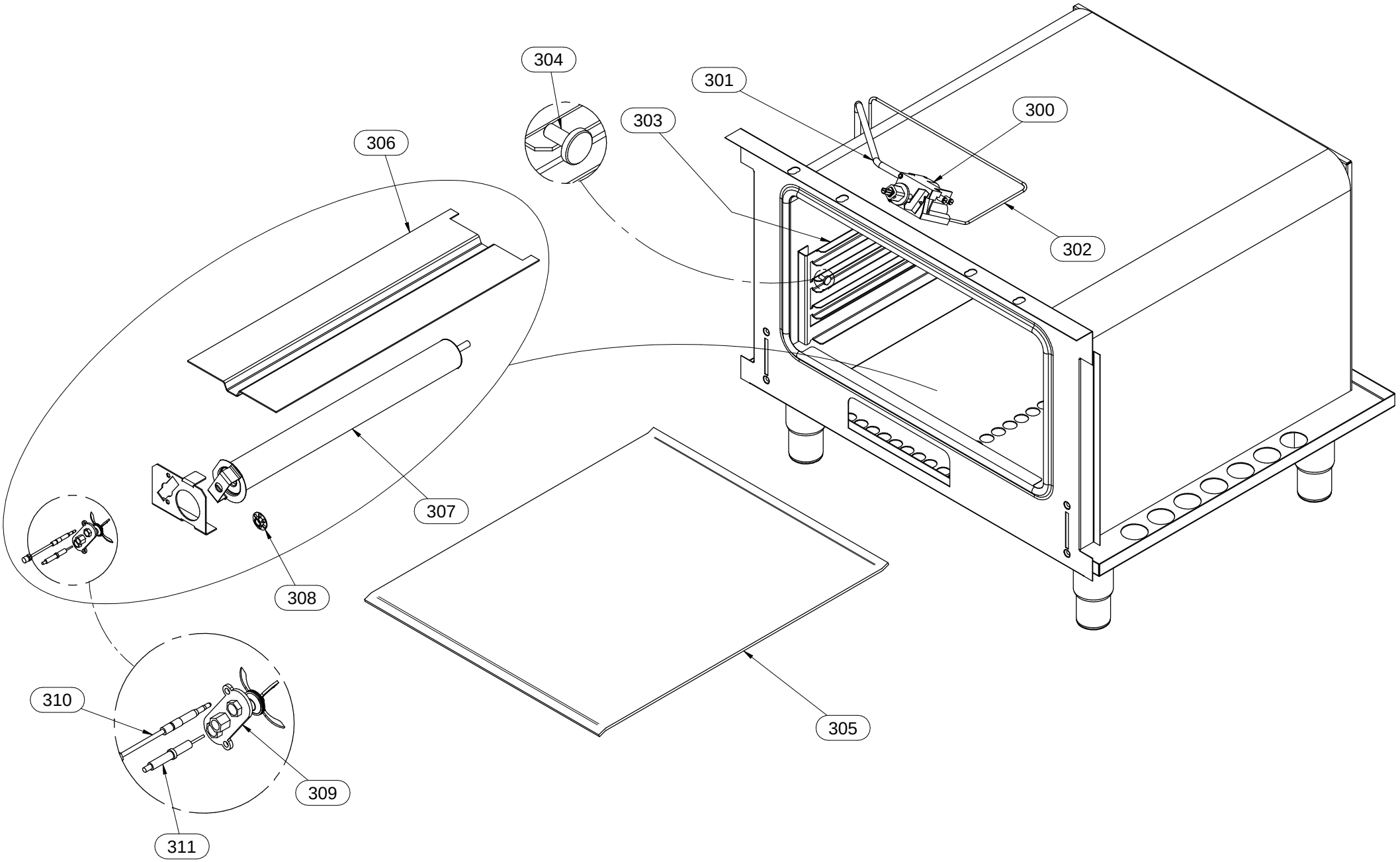

Mod.:	_70/… TP...G... - _90/... TP...G… EXTREME			cod. / num. 2531658.00 data / date 12/06/2014 rif. / ref. 2531657.00		_70/80 TPG... - TP...G...	_70/120 TP...G...	_90/80 TPG... - TP...G...	_90/120 TP...G...	NOTE
POS.	DESCRIZIONE	DESCRIPTION	DENOMINATION	BENENNUNG	COD.	Q.ty				
150	RUBINETTO GAS	GAS TAP	ROBINET GAZ	GASHAHN	671.031.00	1	1	1	1	
151	TUBO GAS	GAS PIPE	TUYAU DE GAZ	GASLEITUNG	256.230.00	1	1			
					256.278.00			1	1	
152	TUBO GAS	GAS PIPE	TUYAU DE GAZ	GASLEITUNG	256.231.00	1	1			
					256.279.00			1	1	
153	GRUPPO PILOTA	PILOT GROUP	GROUPE VEILLEUSE	ZÜNDBRENNER GRUPPE	672.057.00	1	1	1	1	
154	CANDELA ACCENSIONE	IGNITION ELECTRODE	BOUGIE D'ALLUMAGE	KERZE SCHNELLBRENNER	672.060.00	1	1	1	1	
155	TERMOCOPPIA	THERMOCOUPLE	THERMOCOUPLE	THERMOELEMENT	672.025.00	1	1	1	1	
156	BRUCIATORE	BURNER	BRULEUR	BRENNER	672.056.00	1	1	1	1	
157	AERATORE	AERATOR	AÉRATEUR	LÜFTER	923.271.00	1	1	1	1	
158	BOCCOLA REGOLAZIONE ARIA	AIR REGULATION BUSHING	BAGUE DE RÉGULATION AIR	LUFTREGLERBÜCHSE	672.061.00	1	1	1	1	
159										
160										
161										
162										
163										
164										
165										
166										
167										
168										
169										
170										
171										
172										
173										
174										
175										
176										
177										
178										
179										
180										
181										
182										
183										

Mod.:	_90/... TPFG EXTREME			cod. / num. 2531725.00 data / date 24/06/2014 rif. / ref. 2531724.00		EM90/80 TPFG	EM90/120 TPFG	NOTE	
POS.	DESCRIZIONE	DESCRIPTION	DENOMINATION	BENENNUNG	COD.	Q. ty			
200	CRUSCOTTO	CONTROL PANEL	BANDEAU	BEDIENBLENDE	6111291.00	1			
					9111370.00		1		
201	MARCHIO	BRAND NAME	MARQUE	MARKENZEICHEN	982.021.00	1	1	**FROM: 15.12.2011**	**TO: 31.01.2014**
					982.023.00	1	1	**FROM: 01.02.2014**	**TO:...**
202	SERIGRAFIA	SCREEN PRINT	SÉRIGRAPHIE	SIEBDRUCK	910.163.00	1	2		
203	SERIGRAFIA	SCREEN PRINT	SÉRIGRAPHIE	SIEBDRUCK	910.164.00	-	1		
204	LABIRINTO	LABYRINTH	LABYRINTHE	LABYRINTH	256.235.00	2	4		
205	MANOPOLA	KNOB	BOUTON	DREHKNOPF	256.217.00	-	2		
206	PIASTRINA GIUNZIONE	FIXING PLATE	PLAQUETTE FIXAGE	BEFESTIGUNGSPLATTE	941.130.00	1	1		
207	GRIGLIA	GRID	GRILLE	ROST	981.071.00	-	2		
208	GRIGLIA CAMINO	FLUE GRIDDLE	GRILLE POUR CHEMINÉE	KAMINROST	982.013.00	1	1		
209	PIEDINO	FOOT	PIED	STELLFUSS	912.090.00	4	4	**FROM: 15.12.2011**	**TO: 17.05.2013**
					912.090.14	4	4	**FROM: 18.05.2013**	**TO:...**
210	PORTA	DOOR	PORTE	TÜR	256.215.00	-	1		
211	COPPIA CERNIERE	GASKETS PAIR	COUPLE CHARNIÈRES	SCHARNIERPAAR	256.216.00	-	1		
212	MAGNETE	MAGNET	MAGNÉTO	MAGNET	684.007.00	-	1	**FROM: 15.12.2011**	**TO: 01.01.2014**
					984.006.00	-	1	**FROM: 02.01.2014**	**TO:...**
213	SERIGRAFIA	SCREEN PRINT	SÉRIGRAPHIE	SIEBDRUCK	910.166.00	1	1		
214	MANOPOLA FORNO	OVEN KNOB	BOUTON DU FOUR	OFENKNOPF	256.243.00	1	1		
215	ACCENDITORE PIEZO	PIEZO LIGHTER	ALLUMEUR PIEZO	PIEZOZÜNDER	912.091.00	2	2		
215a	CAPPUCCIO	CAP	CAPUCHON	KAPPE	951.047.00	2	2		
216	PORTA	DOOR	PORTE	TÜR	256.248.00	1	1		
216a	CERNIERA	JOINT	CHARNIERE	SCHARNIER	684.030.00	2	2		
217	PORTARULLINO	ROLL HOLDER	PORTE-AIGUILLE DE ROULEMENT	ROLLE-TRÄGER	684.011.00	2	2		
218	MANOPOLA	KNOB	BOUTON	DREHKNOPF	256.229.00	1	1		
219	GANCIO	HOOK	CROC	HAKEN	683.028.00	1	1		
220	PIASTRA	SOLID TOP	PLAQUE COUP DE FEU	KOCHFELD	981.058.00	2	2		
221	GUARNIZIONE	WASHER	GUARNITURE	DICHTUNGSRING	953.004.00	3	3	U. M. metri	U. M. meters
222	ANELLO CENTRALE	CENTRAL RING	ANNEAU CENTRAL	MITTELRING	981.059.00	1	1		
223									
224									
225									
226									
227									
228									

Mod.:	_70/… …FG… - _90/… …FG… GAS OVEN			cod. / num. 2531593.00 data / date 09/06/2014 rif. / ref. 2531592.00		_70/… …FG… _90/… …FG…	_90/160 …FG…	_70/… TPFG… _90/… TPFG…	NOTE
POS.	DESCRIZIONE	DESCRIPTION	DENOMINATION	BENENNUNG	COD.	Q. ty			
300	VALVOLA GAS	GAS VALVE	SOUPAPE GAZ	GAS VENTIL	256.277.00	1	2	1	
301	TUBO GAS	GAS PIPE	TUYAU DE GAZ	GASLEITUNG	256.244.00	1	2		
					256.280.00			1	
302	TUBO GAS	GAS PIPE	TUYAU DE GAZ	GASLEITUNG	256.247.00	1	2		
					256.281.00			1	
303	REGGIGRIGLIA	TRAY RACK	PORTE-PLAQUES	EINHÄNGEGESTELL	622.967.00	2	4	2	
304	FISSAGGIO REGGIGRIGLIA	TRAY RACK FIXING	FIXAGE PORTE-PLAQUES	BEFESTIGUNG DES EINHÄNGEGESTELLS	641.090.00	4	8	4	
305	SUOLA FORNO	INNER OVEN SOLE	SOLE DU FOUR	OFENINNENBODEN	635.029.00	1	2	1	
306	PROTEZIONE	PROTECTION	PROTECTION	SCHUTZ	622.969.00	1	2	1	
307	BRUCIATORE	BURNER	BRULEUR	BRENNER	672.152.00	1	2	1	
308	AERATORE	AERATOR	AÉRATEUR	LÜFTER	941.124.00	1	2	1	
309	GRUPPO PILOTA	PILOT GROUP	GROUPE VEILLEUSE	ZÜNDBRENNER GRUPPE	672.042.00	1	2	1	
310	TERMOCOPPIA	THERMOCOUPLE	THERMOCOUPLE	THERMOELEMENT	672.154.00	1	2		
					672.179.00			1	
311	CANDELA ACCENSIONE	IGNITION ELECTRODE	BOUGIE D'ALLUMAGE	KERZE SCHNELLBRENNER	256.017.00	1	2	1	
312									
313									
314									
315									
316									
317									
318									
319									
320									
321									
322									
323									
324									
325									
326									
327									
328									
329									
330									
331									
332									
333									
334									
335									