DESPIECE TECNICO

Sarten basculante eléctrica
Electric tilting Bratt Pan
Sauteuse basculante électriques
Elektro-kippbratpfannen
Brasiere electriche
Fritadeira baculante Elétrica

GAMA 900

Modelos:

SBE9-10 I AD
SBE9-10 I M AD
SBE9-15 I M AD

Noviembre 2011 November

FAGOR

FAGOR INDUSTRIAL

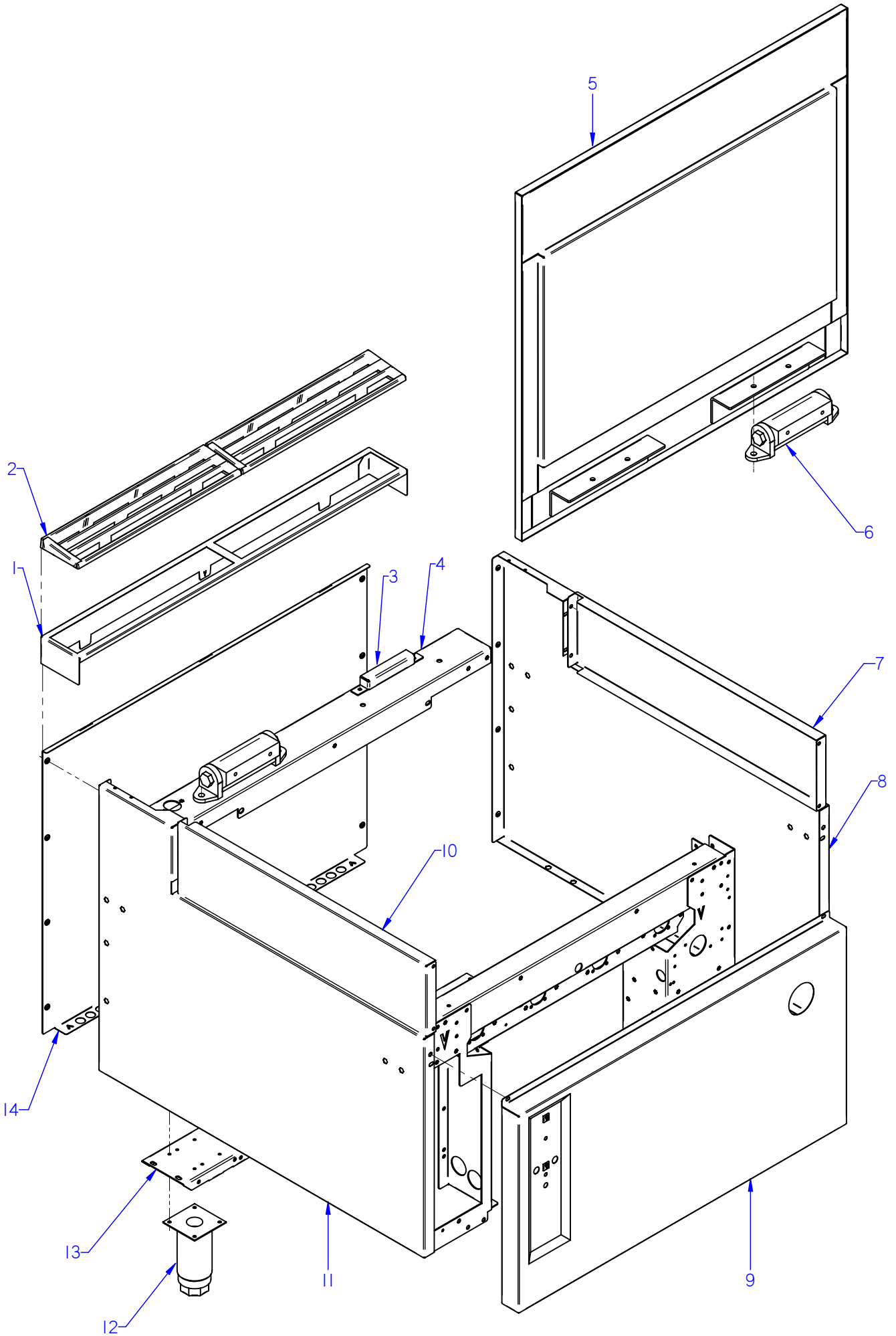

ITEM MARCADO EN COLOR = REPUESTO RECOMENDADO
COLOURED ITEM = RECOMMENDED SPARE PART

Nº plano / N º plane	Firma	Fecha / Date	Denominación / Denomination: MUEBLE / FITTING	Lamina / Sheet	
C-2925	Irene Berrpe	2011-11	SARTEN BASCUL. SBE9-10 / 15 I AD	1	Fagor Industrial S.Coop. FAGOR Oñate

MOD.	SARTEN BASCULANTE TILTING BRATT PANS	ZONA / ZONE	MUEBLE / FITTING	PLANO DIAGRAM	C-2925

ITEM	CODIGO REFERENCE	DENOMINACION	DENOMINATION	SBE9-10 I AD	SBE9-10 I AD S	SBE9-10 I M AD	SBE9-10 I M S AD	SBE9-15 I M AD	SBE9-15 I M AD S			ELIMINADO ELIMINATED	INTRODUCID. INTRODUCED	NOTAS
1	R205439000	SOPORTE EMBELLECEDOR 1M	TRIM SUPPORT 1M	1	1	1	1	_	_					
1	R205440000	SOPORTE EMBELLECEDOR 1,5M	1.5 M TRIM SUPPORT	_	_	_	_	1	1					
2	R205425000	EMBELLECEDOR ESMALTE	ENAMEL TRIM	2	2	2	2	3	3					
3	X082655000	TOPE TAPA SARTEN	PAN COVER TOP	2	2	2	2	2	2					
	Q012042000	TORNILLO EXAGONAL M6X15	HEXAGONAL BOLTM6X15	4	4	4	4	4	4					
	Q221342000	REMACHE EXAGONAL M5	HEXAGONAL RIVET M5	4	4	4	4	4	4					
	Q012031000	TORNILLO EXAGONAL M5X10	HEXAGONAL BOLT M5X10	4	4	4	4	4	4					
4	X020117000	CUBIERTA PUENTE 1M AD	BRIDGE COVERING 1M AD	1	1	1	1	_	_					
4	X080115000	CUBIERTA PUENTE 1.5M AD	BRIDGE COVERING 1.5M AD	_	_	_	_	1	1					
	Q411302000	REMACHE MONOBOLT Ø6.35	MONOBOLT RIVET D6.35	6	6	6	6	6	6					
	Q221342000	REMACHE EXAGONAL M5	HEXAGONAL RIVET M5	2	2	2	2	2	2					
5	X026121000	TAPA COMPLETA 1 M AD	LID COMPLETE 1 M AD	1	1	1	1	_	_					
5	X086127000	TAPA COMPLETA 1,5 M AD	LID COMPLETE 1,5 M AD	_	_	_	_	1	1					
S/Nº	S266124000	ASA G900 AD	HANDLE G900 AD	1	1	1	1	1	1					
S/Nº	S262678000	CASQUILLO AMARRE TAPA	MOORING COVER CAP	2	2	2	2	2	2					
	Q012051000	TORNILLO EXAGONAL M8x10	HEXAGONAL BOLT M8x10	2	2	2	2	2	2					
6	X026123000	BISAGRA ADVANCE	HINGE ADVANCE	2	2	2	2	2	2					
	Q012053000	TORNILLO EXAGONAL M8x20	HEXAGONAL BOLT M8x20	4	4	4	4	4	4					
	Q262050000	ARANDELA GROW. A8 A304	WASHER GROW. A8 A304	4	4	4	4	4	4					
	Q232050000	ARANDELA A8	WASHER A8	4	4	4	4	4	4					
	Q162050000	TUERCA EXAGONAL M8X1 DIN 934	HEXAGONAL NUT M8X1 DIN 934	4	4	4	4	4	4					
7	X082822000	LATERAL CUBA ADVANCE	PAN ADVANCE SIDE	1	1	1	1	1	1					
8	X082819000	PANEL LATERAL DERECHO AD	RIGHT SIDE PANEL AD	1	_	1	_	1	_					
8	X242825000	PANEL LATERAL DERECHO S AD	RIGHT SIDE PANEL S AD	_	1	_	1	_	1					
	Q221343000	REMACHE EXAGONAL M6	HEXAGONAL RIVET M6	11	_	11	_	11	_					
	Q012042000	TORNILLO EXAGONAL M6x15	HEXAGONAL BOLT M6x15	4	_	4	_	4	_					
	Q262040000	ARANDELA GROW. A6 A304	WASHER GROW. A6 A304	4	_	4	_	4	_					
	Q221342000	REMACHE EXAGONAL M5	HEXAGONAL RIVET M5	3	3	3	3	3	3					
	Q152004000	TORNILLO APLASTADO M5x13	FLAT HEAD SCREW M5X13	1	1	1	1	1	1					
	Q162030000	TUERCA EXAGONAL M5	HEXAGONAL NUT M5	_	_	_	1	_	1					

MOD.	SARTEN BASCULANTE TILTING BRATT PANS	ZONA / ZONE	MUEBLE / FITTING	PLANO DIAGRAM	C-2925

ITEM	CODIGO REFERENCE	DENOMINACION	DENOMINATION	SBE9-10 I AD	SBE9-10 I AD S	SBE9-10 I M AD	SBE9-10 I M S AD	SBE9-15 I M AD	SBE9-15 I M AD S			ELIMINADO ELIMINATED	INTRODUCID. INTRODUCED	NOTAS
9	X042812000	PANEL FRONTAL SBE9-10 AD	FRONT PANEL SBE9-10 AD	1	1	_	_	_	_					
9	X402802000	PANEL FRONTAL SBE9-10 M AD	FRONT PANEL SBE9-10 M AD	_	_	1	1	_	_					
9	X082824000	PANEL FRONTAL SBE9-15 AD	FRONT PANEL SBE9-15 AD	_	_	_	_	1	1					
	Q152004000	TORNILLO APLASTADO M5X13	FLAT HEAD SCREW M5X13	2	2	2	2	2	2					
	Q012042000	TORNILLO EXAGONAL M6x15	HEXAGONAL BOLT M6x15	2	2	2	2	2	2					
	Q262040000	ARANDELA GROW. A6 A304	WASHER GROW. A6 A304	2	2	2	2	2	2					
10	X082822000	LATERAL CUBA ADVANCE	PAN ADVANCE SIDE	1	1	1	1	1	1					
11	X082818000	PANEL LATERAL IZQUIERDO AD	LEFT SIDE PANEL AD	1	_	1	_	1	_					
11	X242824000	PANEL LATERAL IZQUIERDO S AD	LEFT SIDE PANEL S AD	_	1	_	1	_	1					
	Q221343000	REMACHE EXAGONAL M6	HEXAGONAL RIVET M6	11	_	11	_	11	_					
	Q012042000	TORNILLO EXAGONAL M6x15	HEXAGONAL BOLT M6x15	4	_	4	_	4	_					
	Q262040000	ARANDELA GROW. A6 A304	WASHER GROW. A6 A304	4	_	4	_	4	_					
	Q221342000	REMACHE EXAGONAL M5	HEXAGONAL RIVET M5	3	3	3	3	3	3					
	Q152004000	TORNILLO APLASTADO M5x13	FLAT HEAD SCREW M5X13	1	1	1	1	1	1					
	Q162030000	TUERCA EXAGONAL M5	HEXAGONAL NUT M5	_	_	_	1	_	1					
12	X260151000	PATA REGULABLE	ADJUSTABLE LEG	4	_	4	_	4	_					
	Q411304000	REMACHE AVIBULB Ø 4,8	AVIBULB RIVET Ø 4.8	16	_	16	_	16	_					
13	X022616000	LISTON SOPORTE PATAS 1M AD	LEG SUPPORT STRIP 1M AD	2	1	2	1	_	_					
13	X240129000	LISTON SOPORTE POST. 1M AD	REAR SUPPORT STRIP 1M AD	_	1	_	1	_	_					
13	X080107000	LISTON SOPORTE PATAS 1,5M AD	LEG SUPPORT STRIP 1.5 M AD	_	_	_	_	2	1					
13	X240138000	LISTON SOPORTE POST. 1,5M AD	REAR SUPPORT STRIP 1,5M AD	_	_	_	_	_	1					
	Q221343000	REMACHE EXAGONAL M6	HEXAGONAL RIVET M6	2	_	2	_	2	_					
14	X022841000	PANEL POSTERIOR 1M AD	REAR PANEL 1M AD	1	_	1	_	_	_					
14	S262804000	PANEL POSTERIOR 1M S AD	REAR PANEL 1M S AD	_	1	_	1	_	_					
14	U962801000	PANEL POSTERIOR 1,5 M AD	REAR PANEL 1.5 M AD	_	_	_	_	1	_					
14	X412803000	PANEL POSTERIOR 1,5 M S AD	REAR PANEL 1,5 M S AD	_	_	_	_	_	1					
	Q419005000	REMACHE 4x8 ALMG3 / ALUMINIO	RIVET 4X8 ALMG3 / ALUMINIUM	8	8	8	8	8	8					

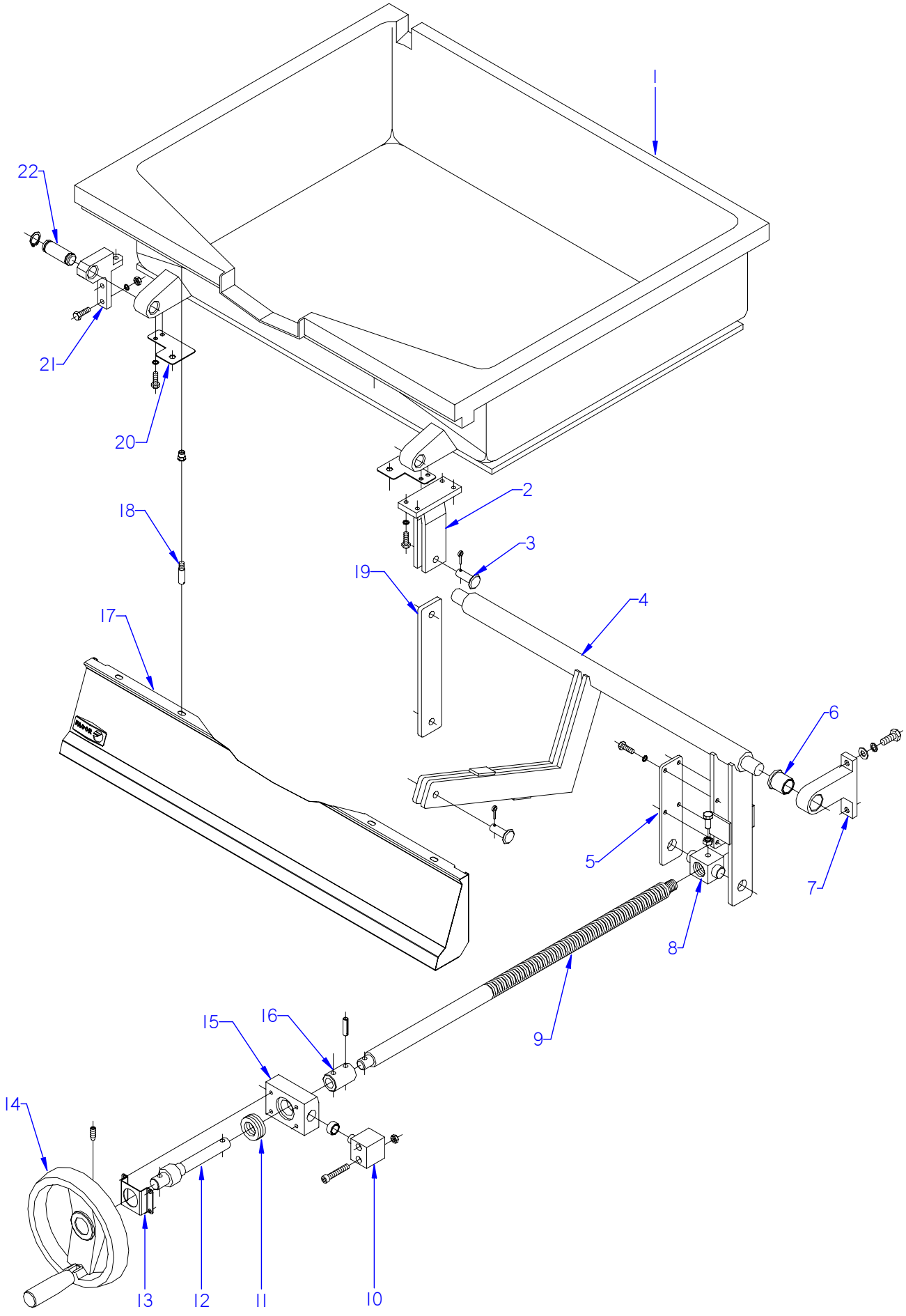

ITEM MARCADO EN COLOR = REPUESTO RECOMENDADO
COLOURED ITEM = RECOMMENDED SPARE PART

Nº plano / N º plane	Firma	Fecha / Date	Denominación / Denomination: CUBA / PAN	Lamina / Sheet	
C-2926	Irene Berrpe	2011-11	SARTEN BASCUL. SBE9-10 I AD	2	Fagor Industrial S.Coop. FAGOR Oñate

MOD.	SARTEN BASCULANTE TILTING BRATT PANS	ZONA / ZONE	CUBA / PAN	PLANO DIAGRAM	C-2926

ITEM	CODIGO REFERENCE	DENOMINACION	DENOMINATION	SBE9-10 I AD								ELIMINADO ELIMINATED	INTRODUCID. INTRODUCED	NOTAS
1	X026117000	CUBA INOXIDABLE SARTEN 910 AD	INOX TUB FRYPAN 910 AD	1										
	Q151336000	TORNILLO SOPORTE GUIAS	SCREW SUPPORT GUIDELINES	2										
	Q221342000	REMACHE EXAGONAL M5	HEXAGONAL RIVET M5	4										
2	X156163000	BRAZO DE GIRO	ROTATION ARM	1										
	Q012043000	TORNILLO EXAGONAL M6x20 A304	HEXAGONAL BOLT M6x20 A304	4										
	Q262040000	ARANDELA GROW. A6 A304	WASHER GROW. A6 A304	4										
3	X156123000	BULON Ø12	PIN Ø12	2										
	Q352024000	PASADOR DE ALETAS Ø4x25	COTTER PIN Ø4x25	2										
4	X156148000	BRAZO ELEVADOR COMPLETO	COMPLETE ELEVATION ARM	1										
5	X156149000	BRAZO LATERAL	SIDE ARM	1										
	Q012042000	TORNILLO EXAGONAL M6x15	HEXAGONAL BOLT M6x15	4										
	Q262040000	ARANDELA GROW. A6 A304	WASHER GROW. A6 A304	4										
6	X109550000	COJINETE SELFOIL B11	BEARING SELFOIL B11	2										
7	X150108000	SOPORTE DE GIRO	ROTATION SUPPORT	2										
	Q012063000	TORNILLO EXAG. M10x20 A304	HEX BOLT M10x20 A304	4										
	Q261060000	ARANDELA MUELLE A10	SPRING WASHER A10	4										
	Q232060000	ARANDELA A10	WASHER A10	4										
8	X146136000	TUERCA HUSILLO	SPINDLE NUT	1										
	Q011364000	TORNILLO EXAG. M10x25	HEX BOLT M10x25	1										
	Q161360000	TUERCA EXAG. M10 H. ZINCADA	HEXAG. SCREW M10 H. ZINC-CO	1										
9	X146134000	HUSILLO GAMA 900	SPINDLE RANGE 900	1										
10	X156113000	PIVOTE DE GIRO	ROTATION PIVOT	2										
	S116126000	COJINETE CILINDRICO	CYLINDRICAL BEARING	2										
	Q052046000	TORNILLO ALLEN M6x40 A304	ALLEN BOLT M6x40 A304	4										
	Q162040000	TUERCA EXAGONAL M6	HEXAGONAL NUT M6	4										
11	X156125000	RODAMIENTO 51204	BEARING 51204	1										
12	X156161000	EJE VOLANTE COMPLETO	COMPLETE FLYSHAFT	1										
13	X152619000	SOPORTE EJE VOLANTE	FLYSHAFT SUPPORT	1										
	Q012041000	TORNILLO EXAGONAL M6x10 A304	HEXAGONAL BOLT M6x10 A304	4										
	Q262040000	ARANDELA GROW. A6 A304	WASHER GROW. A6 A304	4										

MOD.	SARTEN BASCULANTE TILTING BRATT PANS	ZONA / ZONE	CUBA / PAN	PLANO DIAGRAM	C-2926

ITEM	CODIGO REFERENCE	DENOMINACION	DENOMINATION	SBE9-10 I AD								ELIMINADO ELIMINATED	INTRODUCID. INTRODUCED	NOTAS
14	X156139000	VOLANTE ELESA	FLYSHAFT ELESA	1										
	Q131552000	VARILLA ROSCADA M8x15	THREADED ROD M8X15	2										
15	X156114000	SOPORTE RODAMIENTO	BEARING SUPPORT	1										
16	X156115000	CASQUILLO	BUSHING	1										
	Q371027000	MANGUITO DE SUJECCION Ø8x30	FASTENING SLEEVE Ø8x30	2										
17	X022845000	PORTAMANDOS SARTEN 1M AD	FRYPAN CONTROL HOLDER 1M	1										
	U022836000	ESCUDO FAGOR	FAGOR EMBLEM	1	1									
	Q301304000	ARANDELA PLANA 23x6,5x2	FLAT WASHER 23X6.5X2	2	2									
	Q012042000	TORNILLO EXAGONAL M6x15	HEXAGONAL BOLT M6x15	2	2									
	Q221023000	CLIP SUJECIÓN RÁPIDA D-5	QUICK FASTENING CLIP D-5	2	2									
18	Q151336000	TORNILLO SOPORTE GUIAS	GUIDE SUPPORT BOLT	2										
19	X156151000	BRAZO	ARM	1										
20	X156156000	AMARRE PANEL PORTAMANDOS	CONTROL HOLDER PANEL FAST.	2										
	Q012041000	TORNILLO EXAGONAL M6x10 A304	HEXAGONAL BOLT M6x10 A304	4										
	Q262040000	ARANDELA GROW. A6 A304	WASHER GROW. A6 A304	4										
21	X156145000	SOPORTE GIRO CUBA	TUB ROTATION SUPPORT	2										
	Q012043000	TORNILLO EXAGONAL M6x20 A304	HEXAGONAL BOLT M6x20 A304	6										
	Q262040000	ARANDELA GROW. A6 A304	WASHER GROW. A6 A304	6										
	Q162040000	TUERCA EXAGONAL M6	HEXAGONAL NUT M6	6										
22	X109511000	BULON LATON	BRASS BOLT	2										
	Q301020000	ANILLO DE SEGURIDAD 20x1,2	CIRCLIP 20x1.2	4										

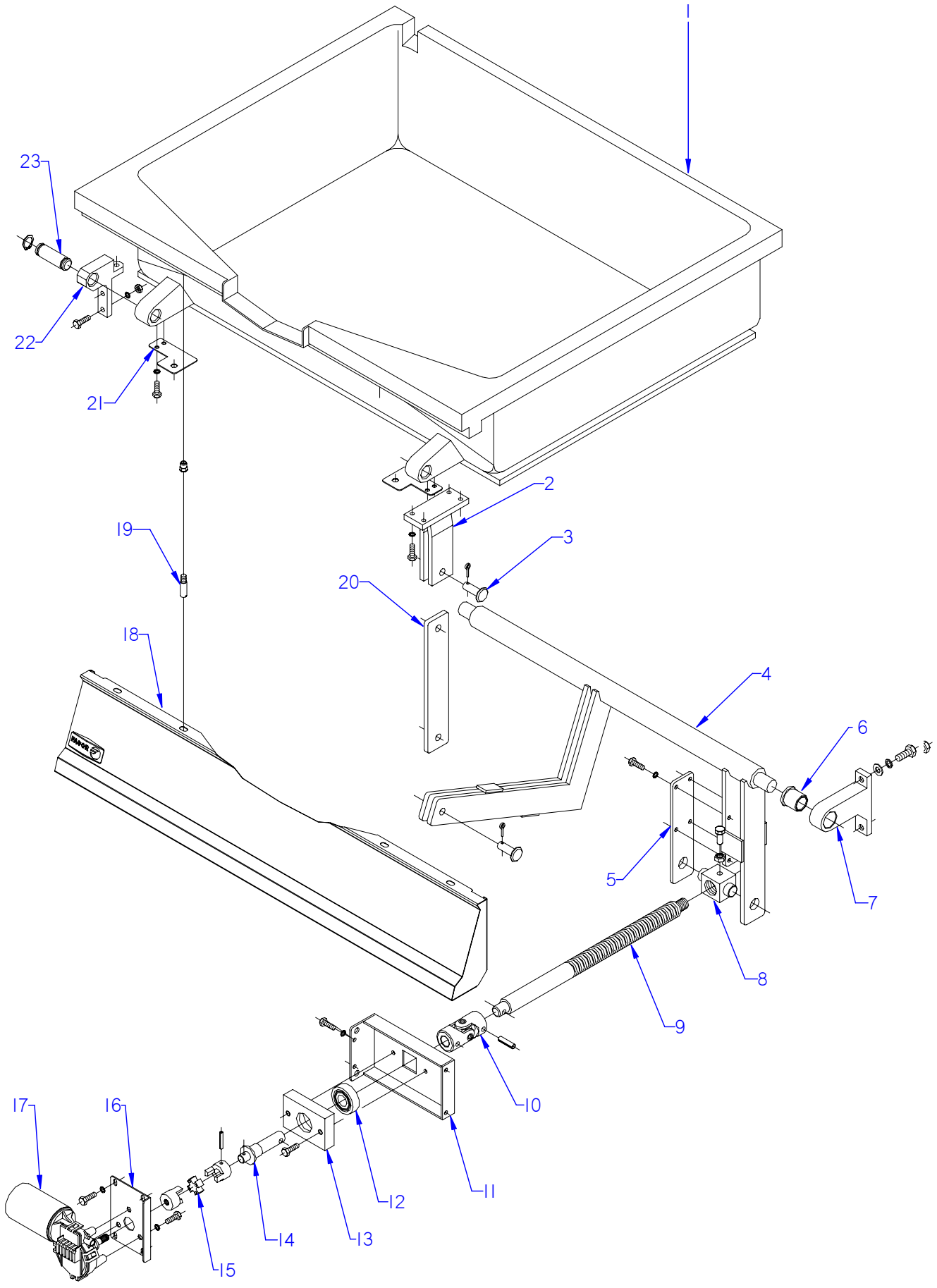

ITEM MARCADO EN COLOR = REPUESTO RECOMENDADO
COLOURED ITEM = RECOMMENDED SPARE PART

Nº plano / N º plane	Firma	Fecha / Date	Denominación / Denomination: CUBA / PAN	Lamina / Sheet	
C-2927		2011-11	SARTEN BASC. SBE9-10/ 15 IM AD	3	Fagor Industrial S.Coop. FAGOR Oñate

MOD.	SARTEN BASCULANTE TILTING BRATT PANS	ZONA / ZONE	CUBA / PAN	PLANO DIAGRAM	C-2927

ITEM	CODIGO REFERENCE	DENOMINACION	DENOMINATION	SBE9-10 I M AD	SBE9-15 I M AD							ELIMINADO ELIMINATED	INTRODUCID. INTRODUCED	NOTAS
1	X026117000	CUBA INOXIDABLE SARTEN 910 AD	INOX TUB FRYPAN 910 AD	1	_									
1	X426108000	CUBA INOXIDABLE SBE9-15 I AD	INOX TUB FRYPAN SBE9-15 I AD	_	1									
	Q151336000	TORNILLO SOPORTE GUIAS	SCREW SUPPORT GUIDELINES	2	2									
	Q221342000	REMACHE EXAGONAL M5	HEXAGONAL RIVET M5	4	4									
2	X156163000	BRAZO DE GIRO	ROTATION ARM	1	1									
	Q012043000	TORNILLO EXAGONAL M6x20 A304	HEXAGONAL BOLT M6x20 A304	4	4									
	Q262040000	ARANDELA GROW. A6 A304	WASHER GROW. A6 A304	4	4									
3	X156123000	BULON Ø12	PIN Ø12	2	2									
	Q352024000	PASADOR DE ALETAS Ø4x25	COTTER PIN Ø4x25	2	2									
4	X156148000	BRAZO ELEVADOR COM. SB9-10	COM. ELEVATION ARM SB9-10	1	_									
4	X426103000	BRAZO ELEVADOR COM. SBE9-15	COM. ELEVATION ARM SBE9-15	_	1									
5	X156149000	BRAZO LATERAL	SIDE ARM	1	1									
	Q012042000	TORNILLO EXAGONAL M6x15	HEXAGONAL BOLT M6x15	4	4									
	Q262040000	ARANDELA GROW. A6 A304	WASHER GROW. A6 A304	4	4									
6	X109550000	COJINETE SELFOIL B11	BEARING SELFOIL B11	2	2									
7	X150108000	SOPORTE DE GIRO	ROTATION SUPPORT	2	2									
	Q012063000	TORNILLO EXAG. M10x20 A304	HEX BOLT M10x20 A304	4	4									
	Q261060000	ARANDELA MUELLE A10	SPRING WASHER A10	4	4									
	Q232060000	ARANDELA A10	WASHER A10	4	4									
8	X146136000	TUERCA HUSILLO	SPINDLE NUT	1	1									
	Q011364000	TORNILLO EXAG. M10x25	HEX BOLT M10x25	1	1									
	Q161360000	TUERCA EXAG. M10 H. ZINCADA	HEXAG. SCREW M10 H. ZINC-CO	1	1									
9	X146134000	HUSILLO GAMA 900	SPINDLE RANGE 900	1	1									
10	X126114000	JUNTA UNIVERSAL 107A	UNIVERSAL JOINT 107A	1	1									
	Q371027000	MANGUITO DE SUJECCION Ø8x30	FASTENING SLEEVE Ø8x30	2	2									
11	X082643000	SOPORTE EJE MOTOR AD	MOTOR SHAFT SUPPORT AD	1	1									
	Q012032000	TORNILLO EXAGONAL M5x15 A304	HEXAGONAL BOLT M5x15 A304	4	4									
	Q262030000	ARANDELA GROW. A5 A304	WASHER GROW. A5 A304	4	4									
12	X346109000	RODAMIENTO SKF	SKF BEARING	1	1									
13	X346105000	SOPORTE RODAMIENTO	BEARING SUPPORT	1	1									
	Q012044000	TORNILLO EXAGONAL M6x25	HEXAGONAL BOLT M6x25	2	2									

MOD.	SARTEN BASCULANTE TILTING BRATT PANS	ZONA / ZONE	CUBA / PAN	PLANO DIAGRAM	C-2927

ITEM	CODIGO REFERENCE	DENOMINACION	DENOMINATION	SBE9-10 I M AD	SBE9-15 I M AD							ELIMINADO ELIMINATED	INTRODUCID. INTRODUCED	NOTAS
14	X346106000	EJE MOTOR	MOTOR SHAFT	1	1									
15	X346107000	ACOPLAMIE. ELASTICO LOVEJOY	ELASTIC LOVEJOY COUPLING	1	1									
	Q371032000	PASADOR ELASTICO Ø5x30	ELASTIC PIN Ø5x30	2	2									
16	X082641000	SOPORTE MOTOR AD	MOTOR SUPPORT AD	1	1									
	Q012042000	TORNILLO EXAGONAL M6x15	HEXAGONAL BOLT M6x15	4	4									
	Q262040000	ARANDELA GROW. A6 A304	WASHER GROW. A6 A304	4	4									
17	X343020000	MOTORREDUCTOR (BOSCH)	GEAR MOTOR (BOSCH)	1	1									
	Q012042000	TORNILLO EXAGONAL M6x15	HEXAGONAL BOLT M6x15	3	3									
	Q262040000	ARANDELA GROW. A6 A304	WASHER GROW. A6 A304	3	3									
	X022845000	PORTAMANDOS SBG9-10 I M AD	CONTROL HOLDER SBG9-10 I M	1	_									
18	X082830000	PORTAMANDOS SB9-15 I AD	CONTROL HOLDER SB9-15 I AD	_	1									
	U022836000	ESCUDO FAGOR	FAGOR EMBLEM	1	1									
	Q301304000	ARANDELA PLANA 23x6,5x2	FLAT WASHER 23X6.5X2	2	2									
	Q012042000	TORNILLO EXAGONAL M6x15	HEXAGONAL BOLT M6x15	2	2									
	Q221023000	CLIP SUJECIÓN RÁPIDA D-5	QUICK FASTENING CLIP D-5	2	2									
19	Q151336000	TORNILLO SOPORTE GUIAS	GUIDE SUPPORT BOLT	2	2									
20	X156151000	BRAZO	ARM	1	1									
21	X156156000	AMARRE PANEL PORTAMANDOS	CONTROL HOLDER PANEL FAST.	2	2									
	Q012041000	TORNILLO EXAGONAL M6x10 A304	HEXAGONAL BOLT M6x10 A304	4	4									
	Q262040000	ARANDELA GROW. A6 A304	WASHER GROW. A6 A304	4	4									
22	X156145000	SOPORTE GIRO CUBA	TUB ROTATION SUPPORT	2	2									
	Q012043000	TORNILLO EXAGONAL M6x20 A304	HEXAGONAL BOLT M6x20 A304	6	6									
	Q262040000	ARANDELA GROW. A6 A304	WASHER GROW. A6 A304	6	6									
	Q162040000	TUERCA EXAGONAL M6	HEXAGONAL NUT M6	6	6									
23	X109511000	BULON LATON	BRASS BOLT	2	2									
	Q301020000	ANILLO DE SEGURIDAD 20x1,2	CIRCLIP 20x1.2	4	4									
	Q012032000	TORNILLO EXAGONAL M5x15	HEXAGONAL BOLT M5x15	1	1									
	Q012033000	TORNILLO EXAGONAL M5x20	HEXAGONAL BOLT M5x20	1	1									

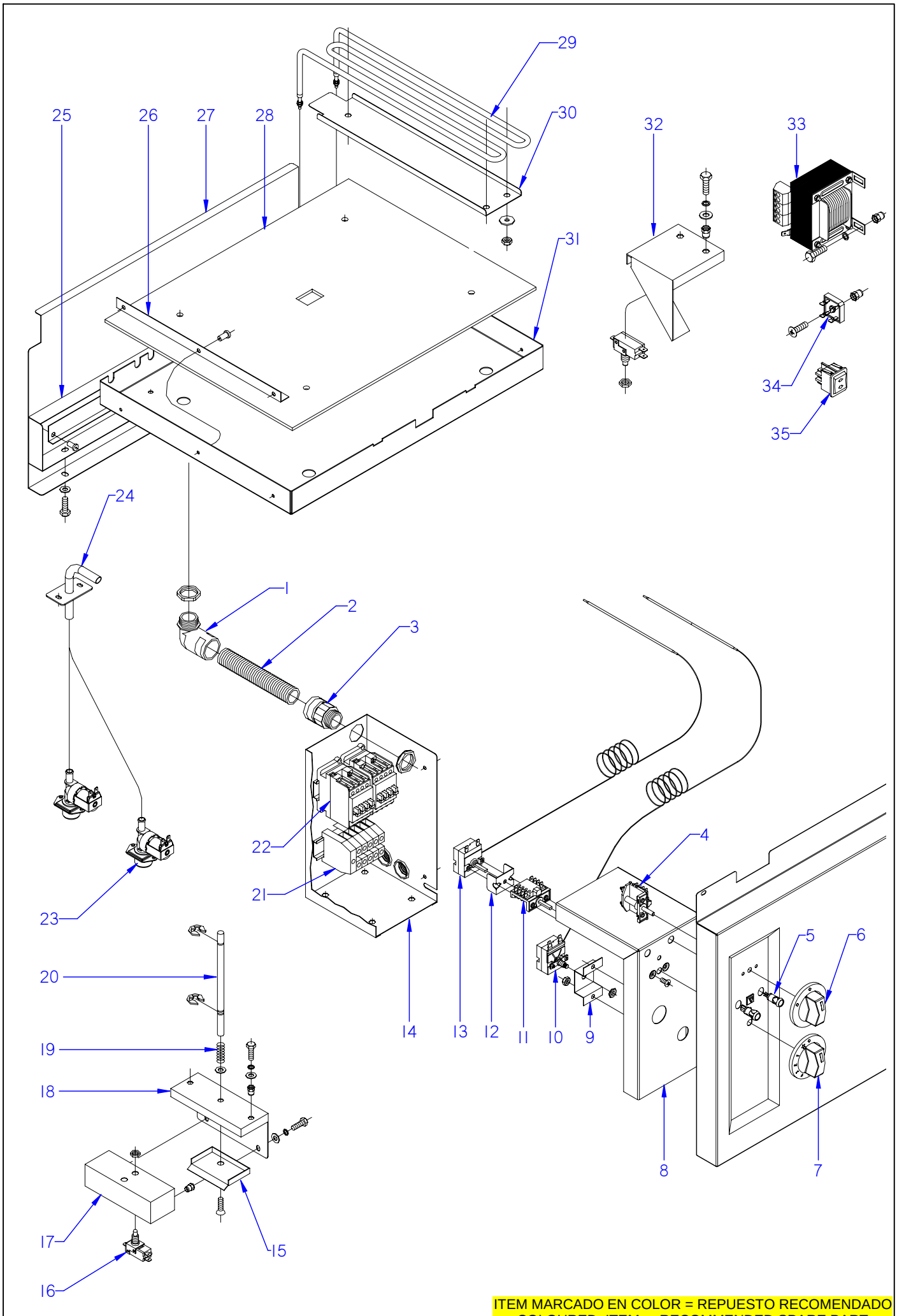

ITEM MARCADO EN COLOR = REPUESTO RECOMENDADO
COLOURED ITEM = RECOMMENDED SPARE PART

Nº plano / N º plane	Firma	Fecha / Date	Denominación / Denomination: FUNCIONAL ELECTRICO / FUNCTIONAL ELECTRICAL	Lamina / Sheet	
C-2928	Irene Berrpe	2011-11	SARTEN BASCUL. SBE9-10 / 15 I AD	4	Fagor Industrial S.Coop. FAGOR Oñate

MOD.	SARTEN BASCULANTE TILTING BRATT PANS	ZONA / ZONE	PARTE FUNCIONAL ELECTRICO FUNCTIONAL ELECTRICAL PART	PLANO DIAGRAM	C-2928

ITEM	CODIGO REFERENCE	DENOMINACION	DENOMINATION	SBE9-10 I AD	SBE9-10 I M AD	SBE9-15 I M AD						ELIMINADO ELIMINATED	INTRODUCID. INTRODUCED	NOTAS
1	Z703006000	RACORD A 90 SFWO-P213T	CONNECTION A 90 SFWO-P213T	1	1	1								
	X143012000	CONTRATUERCA PG21 GAESTOP.	COUNTERNUT PG21 GAESTOP.	1	1	1								
2	3712300000	TUBO PG21 0233.204.023	PIPE PG21 0233.204.023	1	1	1								
3	X713021000	RACORD ICK 5020	CONNECTION ICK 5020	1	1	1								
4	R693004000	CONMUTADOR DE FUNCIONES	FUNCTIONS SWITCH	1	1	1								
	Q151320000	TOR. ALOMADO M4X6 H.ZINCADO	CURVED SCREW M4X6 H. ZINC	2	2	2								
5	X143018000	PILOTO AMBAR SARTEN	FRYING PAM AMBER PILOT	1	1	1								
S/Nº	X143017000	PILOTO VERDE SARTEN	GREEN FRYPAN PILOT	1	1	1								
6	S142105000	MANDO AGUA MARMITA FG(08)	WATER PAN CONTROL FG(08)	1	1	1								
S/Nº	R052102000	JUNTA COMPONENT. ELECTRICOS	BOARD OF ELECTRICAL COMP.	1	1	1								
7	U173005000	BOTON DE MANDO Ø6	CONTROL BUTTON Ø6	1	1	1								
S/Nº	R052102000	JUNTA COMPONENT. ELECTRICOS	BOARD OF ELECTRICAL COMP.	1	1	1								
8	X082629000	TAPA CAJA SOPOR. VALVULA AD	VALVE SUPPORT BOX COVER AD	1	1	1								
9	X082628000	SOPORTE LIMITADOR AD	LIMITER SUPPORT AD	1	1	1								
	Q162030000	TUERCA EXAGONAL M5	HEXAGONAL NUT M5	2	2	2								
10	R612103000	TERMOSTATO LIMITADOR	THERMOSTAT LIMITER	1	1	1								
	Q013023000	TORNILL. EXAGONAL M4x20 LATON	HEXAGONAL BOLT M4X20 BRASS	1	1	1								
	Q163020000	TUERCA EXAGONAL M4 LATON	HEXAGONAL NUT M4 BRASS	1	1	1								
	Q183001000	TUERCA CUADRADA M4	SQUARE NUT M4	1	1	1								
	Q563004000	LENGÜETA COMPONENT. DOBLE	DOUBLE COMPONENT TONGUE	1	1	1								
	Z603022000	PLACA ASIENTO CONEXIÓN MASA	SEATING PLATE EARTH CONNEC	1	1	1								
11	X163007000	CONMUTADOR ACOPLE TERMOS	THERMOSTAT CONNECT SWITCH	1	1	1								
12	H363003000	"U" SOPORTE TERMOSTATO AD	THERMOSTAT U SUPPORT AD	1	1	1								
13	X153000000	TERMOSTATO 50-310 C	THERMOSTAT 50-310 C	1	1	1								
	Q042021000	TORNIL. AVELLANADO M4x10 A304	COUNTERSUNK BOLT M4X10 A30	2	2	2								
14	X082624000	SOPORTE VALVULA AD	VALVE SUPPORT AD	1	1	_								
14	X082656000	CAJA NUEVA AD SBE9-15 I M AD	BOX NEW SBE9 AD-15 AD M I	_	_	1								
	X723014000	PASAMUROS Ø 30	WALL BUSHING Ø 30	3	3	3								
	Q411304000	REMACHE AVIBULB Ø 4,8	AVIBULB RIVET Ø 4.8	4	4	4								
15	X022621000	PROTECCION SUPERIOR AD	UPPER PROTECTION AD	1	1	1								
	Q152024000	TORNILLO AVELLANADO M4x8 A30	COUNTERSUNK BOLT M4X8 A304	1	1	1								

MOD.	SARTEN BASCULANTE TILTING BRATT PANS	ZONA / ZONE	PARTE FUNCIONAL ELECTRICO FUNCTIONAL ELECTRICAL PART	PLANO DIAGRAM	C-2928

ITEM	CODIGO REFERENCE	DENOMINACION	DENOMINATION	SBE9-10 I AD	SBE9-10 I M AD	SBE9-15 I M AD						ELIMINADO ELIMINATED	INTRODUCID. INTRODUCED	NOTAS
16	X343015000	MICRORRUPTOR 32280001	MICROSWITCH 32280001	1	3	3								
17	X022620000	CAJA PORTA MICRO AD	MICRO HOLDER BOX AD	1	1	1								
	Q221342000	REMACHE EXAGONAL M5	HEXAGONAL RIVET M5	4	4	4								
	Q012031000	TORNILLO EXAGONAL M5x10 A304	HEXAGONAL BOLT M5x10 A304	2	2	2								
	Q302022000	ARANDELA 16x6x1,2 A304	WASHER 16x6x1.2 A304	2	2	2								
	Q262030000	ARANDELA GROW. A5 A304	WASHER GROW. A5 A304	2	2	2								
18	X022619000	SOPORTE CAJA PORTA MICRO AD	MICRO HOLDER BOX SUPPORT	1	1	1								
	Q221342000	REMACHE EXAGONAL M5	HEXAGONAL RIVET M5	2	2	2								
	Q012031000	TORNILLO EXAGONAL M5x10 A304	HEXAGONAL BOLT M5x10 A304	2	2	2								
	Q302022000	ARANDELA 16x6x1,2 A304	WASHER 16x6x1.2 A304	2	2	2								
	Q262030000	ARANDELA GROW. A5 A304	WASHER GROW. A5 A304	2	2	2								
19	Z700603000	MUELLE 07777	SPRING 07777	1	1	1								
20	X152682000	EJE PULSADOR MICRO	MICRO BUTTON SHAFT	1	1	1								
	Q271033000	ARANDELA DE SEGURIDAD Ø6	SAFETY WASHER Ø6	2	2	2								
21	P453025000	BORNES 10 WDU-10203.O	TERMINALS 10 WDU-10203.O	3	3	_								
21	Z683069000	BORNA 16	TERMINAL 16	_	_	3								
	Z263302000	BORNA DE PASO AZUL	BLUE THROUGH TERMINAL	1	1	_								
	P453026000	BORNE TIER 10 WPE-10103.O	TERMINAL TIER 10 WPE-10103.O	1	1	_								
	Z263303000	TOPE FINAL	END STOP	1	1	_								
	Z683097000	BORNA PASO WDU16 10204.8	STEP TERMINAL WDU16 10204.8	_	_	1								
	Z683070000	BORNA A TIERRA WEIDMULLER	TERMINAL TO EARTH WEIDMULL	_	_	1								
	Z683096000	TOPE FINAL WEW35 10590.0	END STOP WEW35 10590.0	_	_	1								
	R663055000	GUIA CONTACTOR L-120	CONTACTOR GUIDE L-120	1	1	1								
	Q419005000	REMACHE 4x8 ALMG3 / ALUMINIO	RIVET 4X8 ALMG3 / ALUMINIUM	2	2	2								
22	Z203050000	CONTAC. SIRIUS 3R 230V.50-60	CONTACT. SIRIUS 3R 230V.50-60	2	2	_								
22	X183011000	CON.3RT1024-1AN20 230V 50H	CON.3RT1024-1AN20 230V 50H	_	_	2								
	R663055000	GUIA CONTACTOR L-120	CONTACTOR GUIDE L-120	1	1	1								
	Q419005000	REMACHE 4x8 ALMG3 / ALUMINIO	RIVET 4X8 ALMG3 / ALUMINIUM	2	2	2								
23	Z701135000	E.V.SIMP.220V COD.255.208	E.V.SIMP.220V COD.255.208	2	2	2								
	Z601156000	REGULADOR 8L RO. 254.034	REGULATOR 8L RED 254.034	2	2	2								
	Q032021000	TORNILLO ALOMADO M4X10	CURVED SCREW M4X10	4	4	4								

MOD.	SARTEN BASCULANTE TILTING BRATT PANS	ZONA / ZONE	PARTE FUNCIONAL ELECTRICO FUNCTIONAL ELECTRICAL PART	PLANO DIAGRAM	C-2928

ITEM	CODIGO REFERENCE	DENOMINACION	DENOMINATION	SBE9-10 I AD	SBE9-10 I M AD	SBE9-15 I M AD						ELIMINADO ELIMINATED	INTRODUCID. INTRODUCED	NOTAS
24	X466119000	CONJUNTO TUBO LLENADO CR	FILLER PIPE ASSEMBLY CR	1	1	1								
	Q152004000	TORN. APLASTADO M5x13 A304	HEXAGONAL FLAT SCREW M5x13	2	2	2								
S/Nº	3676900000	TUBO GOMA NEGRA Ø 17*10	BLACK RUBBER PIPE 17*10	2	2	2								
	Q881308000	ABRAZADERA 8-14L	CLAMP 8-14L	2	2	2								
S/Nº	Z201106000	RACORD EN Y	Y-CONNECTION	4	4	4								
25	X042605000	TAPA CUBIERTA BORNAS 1M AD	TERMINAL COVER LID 1M AD	1	1	_								
25	X422620000	TAPA CUBIER. BORNAS 1,5 M AD	TERMINAL COVER LID 1,5 M AD	_	_	1								
	X402601000	ESCUADRA SEPARADOR RESIST.	RESIST. DIVIDER BRACKET	2	2	2								
	Q012032000	TORNILLO EXAGONAL M5x15 A304	HEXAGONAL BOLT M5x15 A304	5	5	5								
	Q262030000	ARANDELA GROW. A5 A304	WASHER GROW. A5 A304	5	5	5								
	Q419005000	REMACHE 4x8 ALMG3 / ALUMINIO	RIVET 4X8 ALMG3 / ALUMINIUM	3	3	3								
26	X142609000	AMARRE AISLANTE	INSULATION FASTENING	3	3	3								
27	X022612000	PROTECCION AGUA SBE-910 I AD	WATER PROTECT. SBE-910 I AD	_	1	_								
27	X082613000	PROTECCION AGUA SBE-915 I AD	WATER PROTECT. SBE-915 I AD	_	_	1								
28	X142656000	AISLANTE 730X520X5	INSULATION 730X520X5	1	1	_								
28	X083016000	BARLAN 575X515X5	BARLAN 575X515X5	_	_	2								
29	X143010000	RESISTENCIA SBE9-00	RESISTOR SBE9-00	6	6	9								
30	X142620000	AMARRE RESISTENCIAS SBE9-00	RESISTOR FASTENING SBE9-00	6	6	9								
	Q131555000	VARILLA ROSCADA M8x30	THREADED ROD M8X30	14	14	21								
	Q302024000	ARANDELA Ø44x9x1,5	WASHER Ø44x9x1.5	14	14	21								
	Q162050000	TUERCA EXAGONAL M8x1 INOX.	HEXAGONAL NUT M8x1 INOX.	14	14	21								
31	X042604000	CUBIERTA RESISTEN. 1 M AD	RESISTOR COVER 1 M AD	1	1	_								
31	X422619000	CUBIERTA RESISTENC. 1,5 M AD	RESISTOR COVER 1,5 M AD	_	_	1								
	Q131557000	VARILLA ROSCADA M8X50	THREADED ROD M8X50	4	4	6								
	Q302024000	ARANDELA Ø44x9x1,5	WASHER Ø44x9x1.5	4	4	6								
	Q162050000	TUERCA EXAGONAL M8x1 INOX.	HEXAGONAL NUT M8x1 INOX.	4	4	6								
32	X082642000	SOPORTE MICRO AD	MICRO BRACKET AD	_	1	1								
	Q221342000	REMACHE EXAGONAL M5	HEXAGONAL RIVET M5	_	2	2								
	Q012031000	TORNILLO EXAGONAL M5x10 A304	HEXAGONAL BOLT M5x10 A304	_	2	2								
	Q302022000	ARANDELA 16x6x1,2 A304	WASHER 16x6x1.2 A304	_	2	2								

MOD.	SARTEN BASCULANTE TILTING BRATT PANS	ZONA / ZONE	PARTE FUNCIONAL ELECTRICO FUNCTIONAL ELECTRICAL PART	PLANO DIAGRAM	C-2928

ITEM	CODIGO REFERENCE	DENOMINACION	DENOMINATION	SBE9-10 I AD	SBE9-10 I M AD	SBE9-15 I M AD						ELIMINADO ELIMINATED	INTRODUCID. INTRODUCED	NOTAS
33	X343021000	TRANSFORMADOR	TRANSFORMER	_	1	1								
	Q012031000	TORNILLO EXAGONAL M5x10 A304	HEXAGONAL BOLT M5x10 A304	_	4	4								
	Q302022000	ARANDELA 16x6x1,2 A304	WASHER 16x6x1.2 A304	_	4	4								
	X082632000	TAPA TRANSFORMADOR AD	TRANSFORMER COVER AD	_	1	1								
	Q012031000	TORNILLO EXAGONAL M5x10 A304	HEXAGONAL BOLT M5x10 A304	_	4	4								
	Q302022000	ARANDELA 16x6x1,2 A304	WASHER 16x6x1.2 A304	_	4	4								
	X082631000	CAJA TRANSFORMADOR AD	TRANSFORMER BOX AD	_	1	1								
	Q012031000	TORNILLO EXAGONAL M5x10 A304	HEXAGONAL BOLT M5x10 A304	_	4	4								
	Q302022000	ARANDELA 16x6x1,2 A304	WASHER 16x6x1.2 A304	_	4	4								
	X082633000	ESCUA. AMARRE TAPA TRANS. AD	TRANSF. COVER FAST. BRACKE	_	1	1								
	Q419005000	REMACHE 4x8 ALMG3 / ALUMINIO	RIVET 4X8 ALMG3 / ALUMINIUM	_	4	4								
34	X343022000	PUENTE RECTIFICADOR FB 3502	RECTIFIER BRIDGE FB 3502	_	1	1								
35	X022106000	BOTON PULSADOR	PRESS BUTTON	_	1	1								
	X022107000	CUERPO PULSADOR	PRESS BUTTON BODY	_	1	1								
	X022136000	PROTECTOR PULSADOR	PRESS BUTTON PROTECTOR	_	1	4								
	X022137000	MARCO PROTECTOR PULSADOR	PRESS BUTTON PROTEC. MARK	_	1	4								
	X022109000	INTERRUPTOR-PULSADOR	PRESS BUTTON SWITCH	_	1	1								
	X082630000	SOPORTE PULSADOR AD	BUTTON SUPPORT AD	_	1	1								
	X082638000	TOPE PULSADOR AD	PRESS BUTTON STOP AD	_	1	1								
	Q012032000	TORNILLO EXAGONAL M5x15 A304	HEXAGONAL BOLT M5x15 A304	_	4	4								
	Q262030000	ARANDELA GROW. A5 A304	WASHER GROW. A5 A304	_	4	4								
	Q162030000	TUERCA EXAGONAL M5	HEXAGONAL NUT M5	_	4	4								

MOD.	SARTEN BASCULANTE TILTING BRATT PANS	ZONA / ZONE	VARIOS / MISCELLANEOUS	PLANO DIAGRAM	

ITEM	CODIGO REFERENCE	DENOMINACION	DENOMINATION	SBE9-10 I AD	SBE9-10 I M AD	SBE9-15 I M AD						ELIMINADO ELIMINATED	INTRODUCID. INTRODUCED	NOTAS
	X046502000	FOLLETO DE INSTRUC.SBE900 AD	INSTRUCT. LEAFLET SBE900 AD	1	1	1								
	X403002000	ESQUEMA TEORICO ADHESIVO	THEOR. DIAGRAM LABEL	_	_	1								HC-75708
	X483003000	PLANO DE MONTAJE SGE7-10	ASSEMBLY PLAN SGE7-10	1	1	1								HC-80160
	X463007000	LEYENDA SARTEN BASCULANTE	TILTING PAN LEGEND	1	1	1								HC-83262
	X143015000	CABLEADO SBE	WIRING SBE	1	1	1								
	X143004000	CABLEADO RESISTENCIAS	RESISTOR WIRING	1	1	_								
	X143016000	CABLE. REGLETA CONTACTOR 10	CABLE. CONTACTOR STRIP 10	2	2	_								
	X423005000	CABLE. REGLETA CONTACTOR 15	CABLE. CONTACTOR STRIP 15	_	_	2								
	X283000000	CABLEADO MOTOR	MOTOR WIRING	_	1	1								
	X463006000	CABLEADO ENTRADA DE AGUA	WATER INPUT WIRING	1	1	1								
	X363018000	CABLE MANGUERA 3X2.5 FE-6-7	HOSE CABLE 3X2.5 FE-6-	1	1	_								
	J243009000	CABLE MANGUERA 3X6	HOSE CABLE 3X6	_	_	1								
	U333003000	CABLE MASA ENCENDEDOR	LIGHTER EARTH CABLE	_	_	1								

SBE9-10M SBE9-15

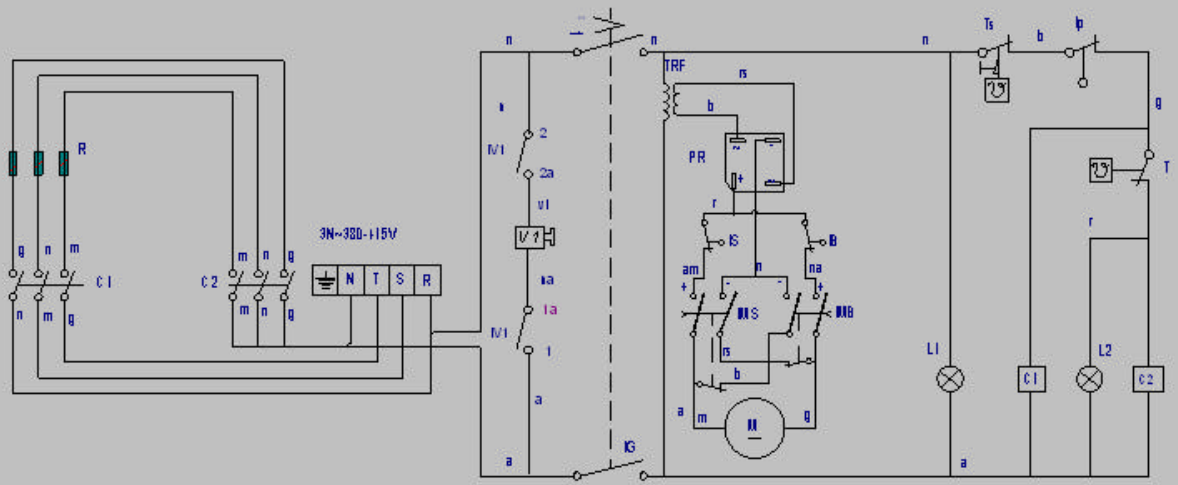

a: azul	a: bleu	a: blue	a: blow	a: azzurra
m: marron	m: marron	m: brown	m: braun	m: marrone
n: negro	n: noir	n: black	n: shwarz	n: nero
r: rojo	r: rouge	r: red	r: rot	r: rosso
b: blanco	b: blanc	b: white	b: weiss	b: bianco
g: gris	g: gris	g: grey	g: grau	g: grigio
rs: rosa	rs: rose	rs: pink	rs: rosa	rs: rosa
am: amarillo	am: jaune	am: yellow	am: gelb	am: giallo
na: naranja	na: orange	na: orange	na: orange	na: arancione
ue: uerde	ue: uert	ue: green	ue: grün	ue: uerde

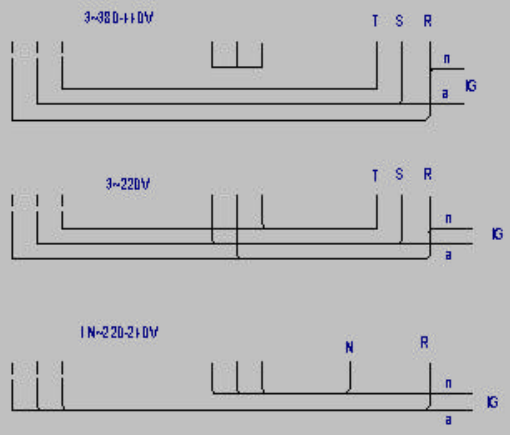

C1,C2: Contactor calentamiento
IB: Micro tope bajada

IMB: Pulsador bajada
IMS: Pulsador subida
IP: Micro seguridad
IS: Micro tope subida
IVI: Interruptor electrovaluula
L1: Lampara marcha
L2: Lampara calentamiento
M: Motor
PR: Puente rectificador
R: Resistencia calentamiento
T: Termostato
TRF: Transformador
TS: Termostato seguridad
VI: Electrovaluula

C1,C2: Contacteur chauffage
IB: Micro bride descente

IMB: Commande de baisse
IMS: Commande de montée
Ip: Micro sécurité
Is: Micro bride montée
IVI: Interrupteur d'électrouanne
L1: Veilleuse mise en route
L2: Veilleuse chauffage
M: Moteur
PR: Pont rectificateur
R: Résistance chauffage
T: Thermostat
TRF: Transformateur
TS: Thermostat sécurité
VI: Électrouanne

C1,C2: Heating relay
IB: Descent tops witch

IMB: Descent switch
IMS: Eleuation switch
IP: Security switch
IS: Eleuating top switch
IVI: Electorualue switch
L1: On light
L2: Heating light
M: Motor
PR: Rectifier bridge
R: Heating element
T: Thermostat
TRF: Transformer
TS: Security thermostat
VI: Electorualue switch

C1,C2: Aufheizkantaktor
IB: Mikro-Schalter unten

IMB: Kippschalter unten
IMS: Kippschalter oben
IP: Mikro-Sicherheitsschalter
IS: Mikro-Schalter oben

L1: Funktionsleuchte
L2: Erwärmungsleuchte
M: Motor
PR: Richtleiterüberbrückung
R: Heizsystem
T: Termostat
TRF: Transformator
TS: Sicherheitsthermostat

C1,C2: Contactore riscaldamento
IB: Micro arresto discesa

IMB: Pulsante discesa
IMS: Pulsante salita
IP: Micro sicurezza
IS: Micro arresto salita
IVI: Interruttore de electrovaluola
L1: Lampada funzionamento
L2: Lampada riscaldamento
M: Motore
PR: Ponte rettificatore
R: Resistenza riscaldamento
T: Termostato
TRF: Transformatore
TS: Termostato di sicurezza
VI: Electrovaluola

	Esquema teórico SBEM		Poliester mate	X-403002		
Nº	Pieza	Cant.	Material	Nº Clasificacion	Acabado	
Nº	Modificacion		Propuesta de	Fecha	Tolerancias generales	
1	VI sartuda		e.carrascal	2008-09-09	<5±	50-400± :
					5-25± :	>400±
					25-50± :	○±

	Firma	Fecha
Dibujado	KONTXI	9/5/2001
Proyectado		
Comprobado		
Escala		

FAGOR

Fagor Industrial, Koop. Elk., Mugatua

Mecanizado superficial

ZARTAGIN IRAULGARRIA

Plano numero HC-75708 -01

Sustituye al Nº

Sustituido por

Plano hauez dalete erakuez kentzaguna kamenizgale

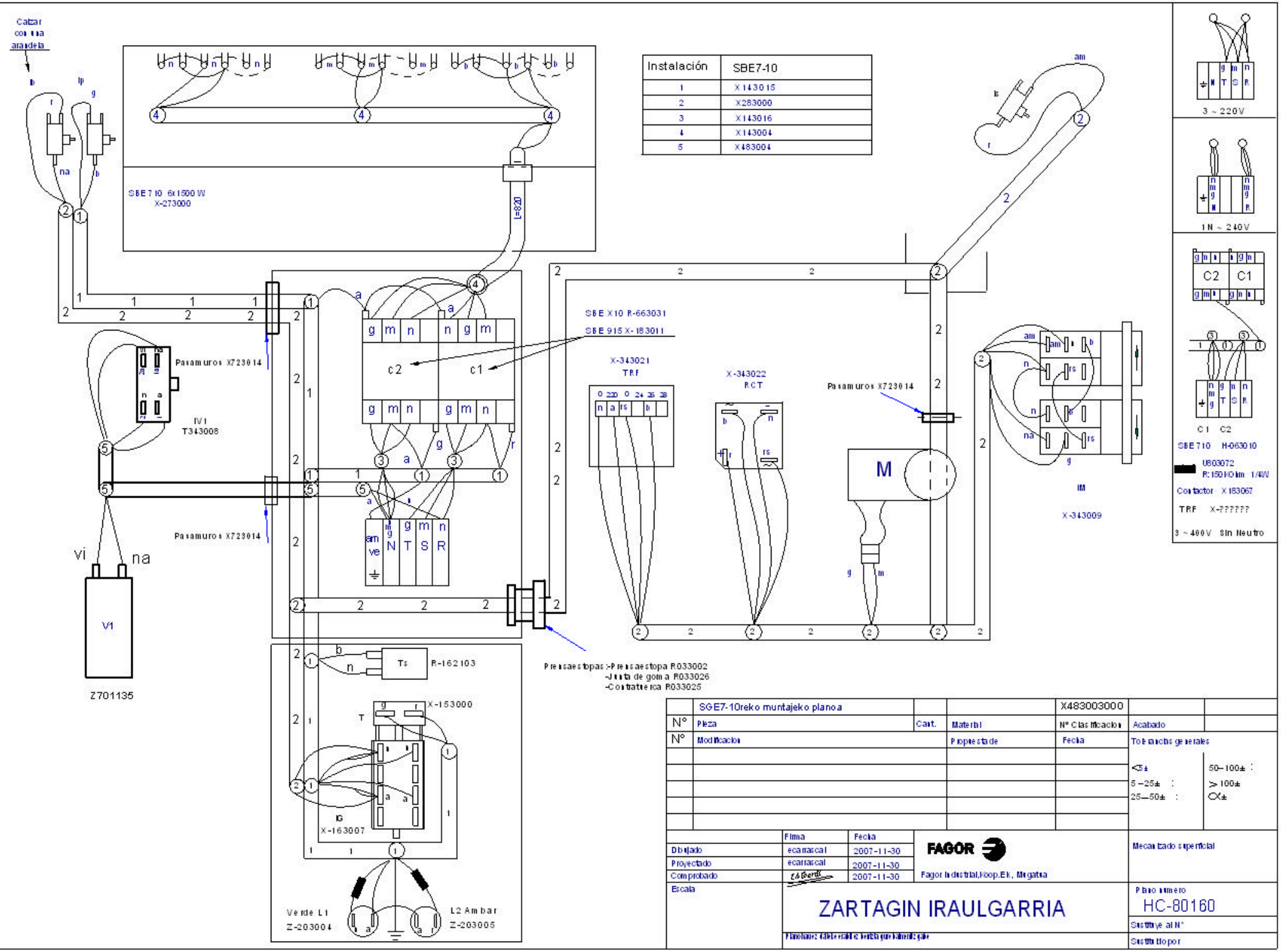

Instalación	SBE7-10
1	X143015
2	X283000
3	X143016
4	X143004
5	X483004

	SGE7-10reko muntajeko planoa			X483003000	
Nº	Pieza	Cant.	Material	Nº Clasificación	Acabado
Nº	Modificación		Propiedad de	Fecha	Tolerancias generales

	Firma	Fecha
Dibujado	ecarrascal	2007-11-30
Proyectado	ecarrascal	2007-11-30
Comprobado		2007-11-30
Escala		

FAGOR

Fagor Industrial,Koop.Elk., Mogatxa

Mecanizado superficial

ZARTAGIN IRAULGARRIA

Plano número HC-80160

Sustituye al Nº

Sustituido por

Simb/LENG		ESPAÑOL	ENGLISH	FRANÇAIS	DEUTSCH	ITALIANO
C1, C2	=	Contactor Calentamiento	Contacteur Chauffe	Heating Contactor	Heizschütz	Contatore Riscaldamento
CN	=	Control de Nivel de agua	Control of water Level	Commande de niveau d'eau	Steuerung des Wasserspiegeles	Controllo del livello d'acqua
E	=	Generador de Chispa	Spark generator	Générateur d'étincelle	Funkengenerator	Generatore della scintilla
IB	=	Micro tope bajada	Microswitch of lowered Limit	Microcontact de la limite abaissée	Mikroschalter der gesenkten Begrenzung	Microinterruttore del limite abbassato
IG	=	Interruptor general	General switch	Commutateur général	Allgemeiner Schalter	Interruttore generale
IGV	=	Interruptor electrovalvulas de agua	Switch electrovalvula water	Commutez l'eau d'electrovalvula	Schalten Sie electrovalvula Wasser	Commuti l'acqua di electrovalvula
IE	=	Pulsador de Encendido	Ignition Switch	Commutateur d'allumage	Zündung-Schalter	Interruttore di accensione
IMB	=	Pulsador bajada	lowered switch	commutateur abaissé	gesenkter Schalter	interruttore abbassato
IMS	=	Pulsador subida	Raised switch	Commutateur augmenté	Angehobener Schalter	Interruttore sollevato
IP	=	Micro seguridad	security microswitch	microcontact de sécurité	Sicherheitsmikroschalter	microinterruttore di sicurezza
IS	=	Micro tope subida	Microswitch of rise Limit	Microcontact de la limite d'élévation	Mikroschalter der Aufstieg Begrenzung	Microinterruttore del limite di aumento
L1	=	Lámpara marcha	Operation Light	Lumière d'opération	Betriebs-Licht	Luce di funzionamento
L2	=	Lámpara calentamiento	Heating Light	Lumière de chauffage	Heizungs-Licht	Luce del riscaldamento
M	=	Motor de elevacion	Motor of elevation	Moteur d'altitude	Motor des Aufzugs	Motore dell'altezza
P	=	Presostato de Camara	Water Level Switch	Commutateur de niveau d'eau	Wasserspiegel-Schalter	Interruttore del livello d'acqua
PR	=	Puente rectificador	Electrical bridge rectifier	Pont redresseur électrique	Elektrischer Brückengleichrichter	Raddrizzatore a ponte elettrico
R	=	Resistencia Calentamiento.	Résistance Chauffe	Heating Resistors	Widerstand Aufheizung	Resistenza Riscaldamento
RE	=	Regulador Energia	Regulator of Energy	Régulateur d'énergie	Regler von Energie	Regolatore di energia
T	=	Termostato	Thermostat	Thermostat	Thermostat	Termostato
TRF	=	Transformador	Transformer	Transformateur	Transformator	Trasformatore
TS	=	Termostato de seguridad	Security Thermostat	Thermostat de sécurité	Sicherheits-Thermostat	Termostato di sicurezza
TRP	=	Termopar	Thermocouple	Thermocouple	Thermoelement	Termocoppia
VG1,VG2	=	ElectroVálvula gas	Electrical gas valve	Clapet à gaz électrique	Elektrisches Gichtventil	Valvola a gas elettrica
V1	=	Valvula Agua CALIENTE	ElectroValve of Hot Water	Électrovalve d'eau chaude	Elektroventil des Heißwassers	Elettrovalvola di acqua calda
V2	=	Valvula Agua FRIA	ElectroValve of cold Water	Électrovalve d'eau froide	Elektroventil des kalten Wassers	Elettrovalvola di acqua fredda
V3	=	Valvula Agua Caldera	electrovalve of water boiler	électrovalve de chauffe-eau	Elektroventil des Warmwasserboilers	elettrovalvola del reattore ad acqua
	=	**COLORES**	**COLOUR**	**COULEURS**	**FARBEN**	**COLORE**
a	=	Azul	Blue	Bleu	Blau	Blu
am	=	Amarillo	Yellow	Jaune	Gelb	Giallo
am/ve	=	Amarillo/verde	Yellow / green	Jaune / vert	Gelb/grün	Giallo/verde
b	=	Blanco	White	Blanc	Weiß	Bianco
g	=	Gris	Grey	Gris	Grau	Grigio
m	=	Marrón	Brown	Marron	Braun	Marrone
n	=	Negro	Black	Noir	Schwarz	Nero
na	=	Naranja	Orange	Orange	Orange	Arancio
r	=	Rojo	Red	Rouge	Rot	Rosso
rs	=	Rosa	Pink	Rose	Rosa	Roseo
ve	=	Verde	Green	Vert	Grün	Verde
vi	=	Violeta	Purple	Violet	Violett	Viola
						X463007000