DESPIECE TECNICO

Lavavajillas de arrastre compactos
Lave-vaisselle d' avancement compacts
Rack compact conveyor dishwasher
Compact korbtransport geschirrspüler
Lavastoviglie a trascinamento compatte
Lava-louças de arrratre compacto

Modelos:

FI-160
FI-200
ECO-160
ECO-200

Octubre 2008 October

Revisado Agosto 2010

Fagor Industrial

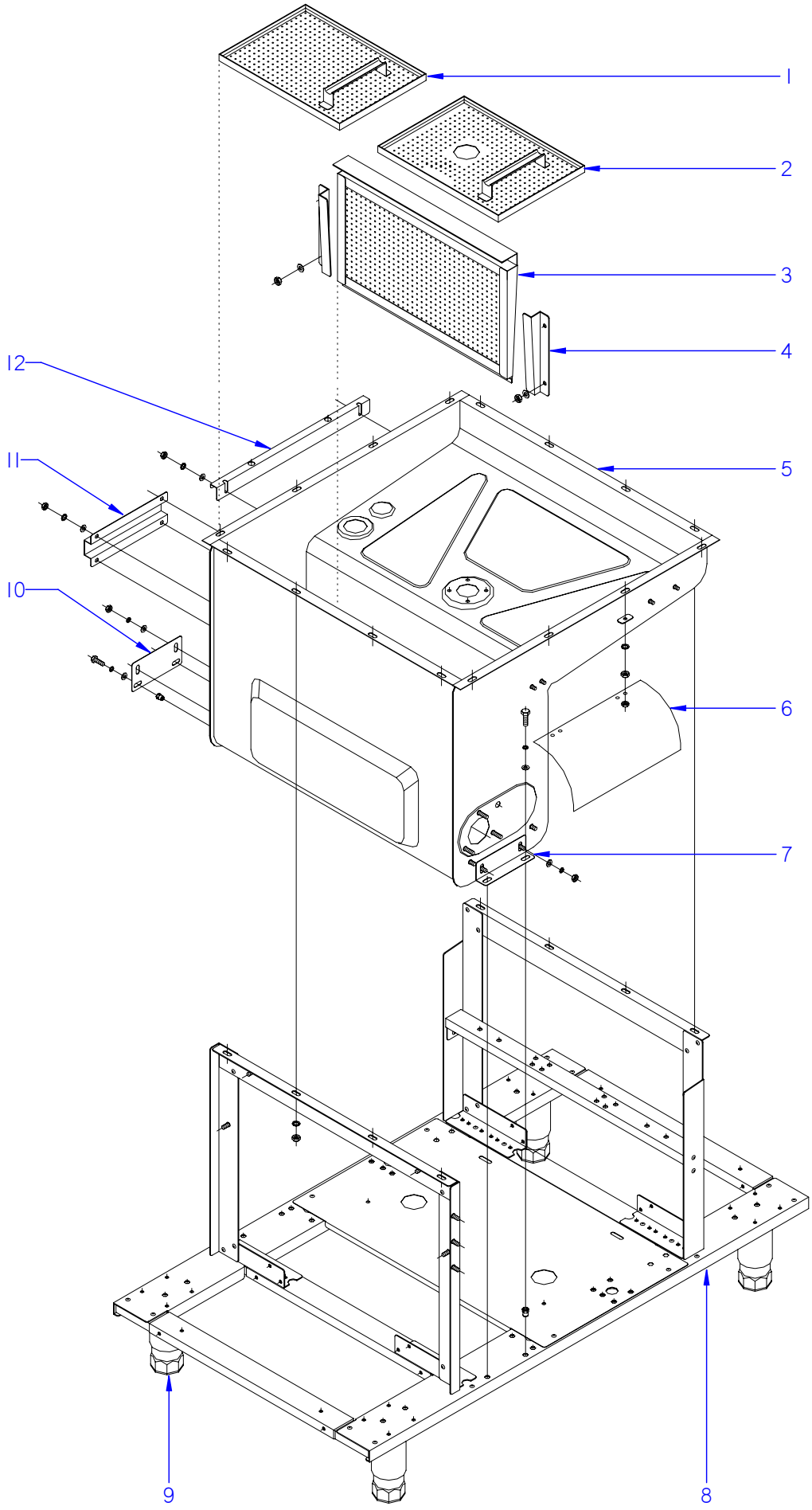

ITEM MARCADO EN COLOR = REPUESTO RECOMENDADO
COLOURED ITEM = RECOMMENDED SPARE PART

N plano	Firma	Fecha	Aparato		Lamina	
C-2120		2008-10	ARMAZON Y CUBA LAVAVAJILLAS COMPACTOS		1	Fagor Industrial S.Coop. FAGOR Oñate

MOD.	LAVAVAJILLAS COMPACTOS COMPACT DISHWASHERS	ZONA	ARMAZON Y CUBA / TUB AND FRAME	PLANO	C-2120

ITEM	CODIGO	DENOMINACION	TEXTO	FI-160 ECO-160	FI-200 ECO-200	FI-200 W					NOTAS
1	Z270803000	BANDEJA POSTERIOR COMPLETA	COMPLETE REAR TRAY	1	1	1					
2	Z270801000	BANDEJA ANTERIOR COMPLETA	COMPLETE FRONT TRAY	1	1	1					
3	Z710907000	FILTRO COMPLETO	COMPLETE FILTER	1	1	1					
4	Z710309000	GUIA FILTRO ANTERIOR	FRONT FILTER GUIDE	1	1	1					
S/Nº	Z710310000	GUIA FILTRO POSTERIOR	REAR FILTER GUIDE	1	1	1					
	Q262040000	ARANDELA GROW. A6 A.304	WASHER GROW. A6 A.304	12	12	12					
	Q162040000	TUERCA EXAGONAL M6	HEXAGONAL NUT M6	12	12	12					
	Q012042000	TORNILLO EXAGONAL M6X15	HEXAGONAL BOLT M6x15	4	4	4					
5	Z270320000	CUBA SOLDADA	WELDED TUB	1	1	1					
	Z310341000	ARANDELA RECTANGULAR	RECTANGULAR WASHER	16	16	16					
	Q262040000	ARANDELA GROW. A6 A.304	WASHER GROW. A6 A.304	16	16	16					
	Q162040000	TUERCA EXAGONAL M6	HEXAGONAL NUT M6	16	16	16					
6	Z313041000	CUBIERTA COMPONENTES	COMPONENT COVER	2	2	2					
7	Z270324000	AMARRE CUBA ANTERIOR	FRONT TUB FASTENING	1	1	1					
8	Z270101000	ARMAZON MONTADO	FRAME MOUNTED	1	1	_					
8	Z270123000	ARMAZON W MONTADO	FRAME W MOUNTED	_	_	1					
	Q232040000	ARANDELA A6	WASHER A6	4	4	4					
	Q262030000	ARANDELA GROW. A5 A.304	WASHER GROW. A5 A.304	4	4	4					
	Q212031000	TUERCA SOMBRERETE M5	COWL NUT M5	4	4	4					
	Q232040000	ARANDELA A6	WASHER A6	8	8	8					
9	X260151000	PATA REGULABLE	ADJUSTABLE LEG	4	4	4					
10	Z270325000	AMARRE CUBA POSTERIOR	REAR TUB FASTENING	1	1	1					
11	Z281111000	PROTECTOR MANGUERA ECO	ECO HOSE PROTECTOR	1	1	1					SOLO MODELOS DERECHA
12	Z272907000	SOPORTE PANEL	PANEL SUPPORT	1	1	1					
	Q152004000	TORNILLO APLASTADO M5x13 A304	FLAT HEADED BOLT M5x13 A304	10	10	10					
	Q262030000	ARANDELA GROW. A5 A.304	WASHER GROW. A5 A.304	10	10	10					
	Q232040000	ARANDELA A6	WASHER A6	12	12	12					
	Q162040000	TUERCA EXAGONAL M6	HEXAGONAL NUT M6	2	2	2					
	Q262040000	ARANDELA GROW. A6 A.304	WASHER GROW. A6 A.304	2	2	2					

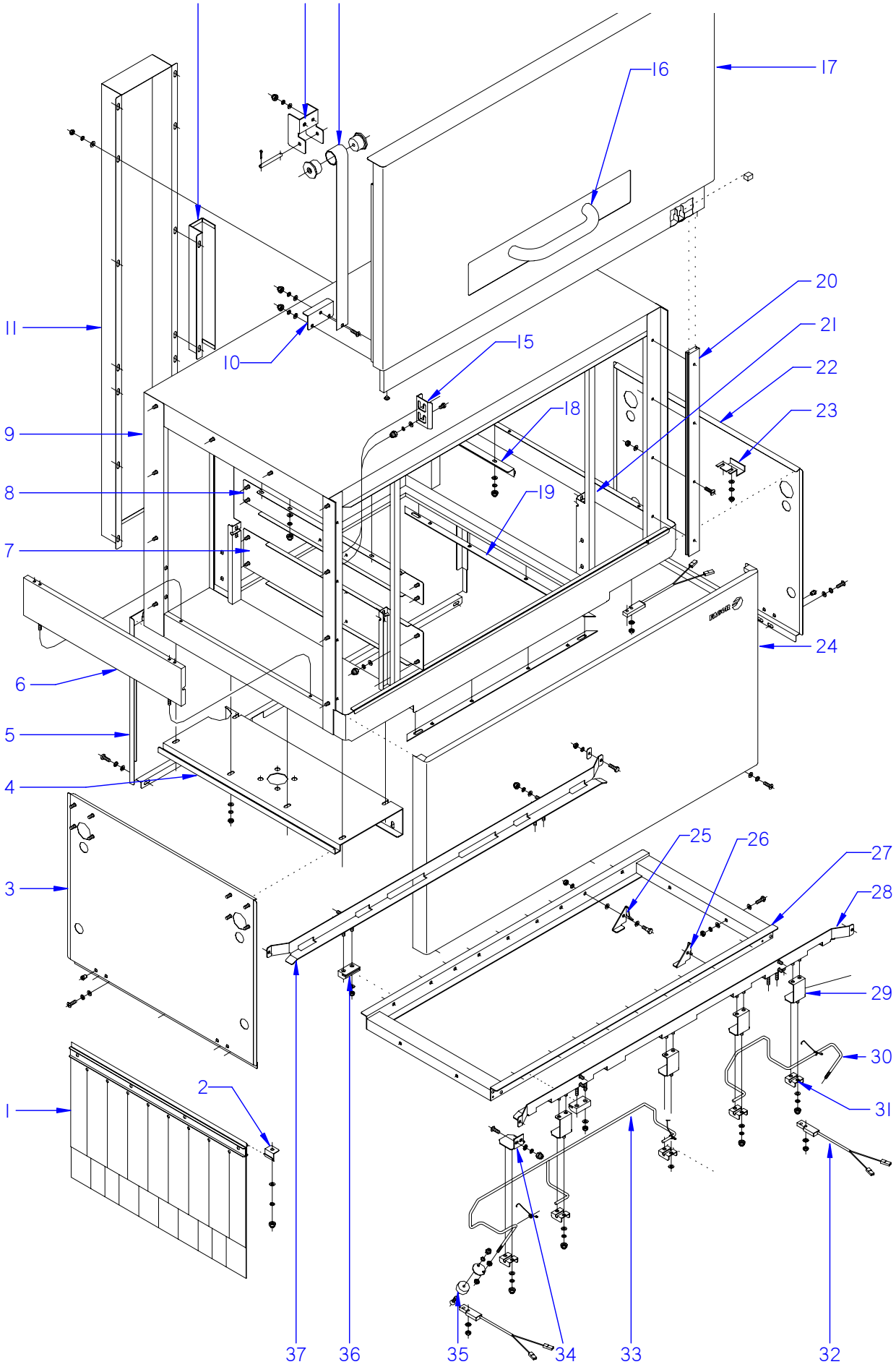

ITEM MARCADO EN COLOR = REPUESTO RECOMENDADO
COLOURED ITEM = RECOMMENDED SPARE PART

N plano	Firma	Fecha	Aparato	Lamina	
C-2121		2008-10	TUNEL DE LAVADO Y ACLARADO LAVAVAJILLAS COMPACTOS	2	Fagor Industrial S.Coop. FAGOR Oñate

MOD.	LAVAVAJILLAS COMPACTOS COMPACT DISHWASHERS	ZONA	TUNEL DE LAVADO Y ACLARADO WASH AND RINSE TUNNEL	PLANO	C-2121

ITEM	CODIGO	DENOMINACION	TEXTO	FI-160 I ECO-160 I	FI-160 D ECO-160 D	FI-200 I ECO-200 I	FI-200 D ECO-200 D	FI-200 W L	FI-200 W R		NOTAS
1	Z276429000	CORTINA INTERIOR COMPLETA	COMPLETE INTERIOR CURTAIN	2	2	2	2	2	2		
	Z276419000	CORTINA EXTERIOR COMPLETA	COMPLETE EXTERIOR CURTAIN	2	2	2	2	2	2		
2	Z270326000	SUJECION CORTINA	CURTAIN FASTENING	4	4	4	4	4	4		
	Q232040000	ARANDELA A6	WASHER A6	4	4	4	4	4	4		
	Q262030000	ARANDELA GROW. A5 A.304	WASHER GROW. A5 A.304	4	4	4	4	4	4		
	Q212031000	TUERCA SOMBRERETE M5	COWL NUT M5	4	4	4	4	4	4		
3	Z272936000	PANEL LATERAL	SIDE PANEL	1	1	1	1	1	1		
4	Z270341000	REFUERZO SOPORTE COMPL.	COMPL. SUPPORT REINFORCEM	1	1	1	1	1	1		
	Q232040000	ARANDELA A6	WASHER A6	8	8	8	8	8	8		
	Q262040000	ARANDELA GROW. A6 A.304	WASHER GROW. A6 A.304	8	8	8	8	8	8		
	Q162040000	TUERCA EXAGONAL M6	HEXAGONAL NUT M6	8	8	8	8	8	8		
5	Z272935000	PANEL POSTERIOR COMPLETO	COMPLETE REAR PANEL	1	1	1	1	1	1		ELIMINADO 28.01.10
5	Z272938000	PANEL POSTERIOR COMPLETO	COMPLETE REAR PANEL	1	1	1	1	1	1		INTRODUCIDO 28.01.10
6	Z270337000	SUPLEMENTO COMPLETO	COMPLETE SUPPLEMENT	1	1	1	1	_	_		
6	Z270343000	SUPLEMENTO COMPLETO W	COMPLETE SUPPLEMENT W	_	_	_	_	2	2		
	Q232040000	ARANDELA A6	WASHER A6	4	4	4	4	8	8		
	Q212031000	TUERCA SOMBRERETE M5	COWL NUT M5	4	4	4	4	8	8		
	Q152004000	TORNILLO APLASTADO M5x13 A304	FLAT HEADED BOLT M5x13 A304	2	2	2	2	4	4		
	Q262030000	ARANDELA GROW. A5 A.304	WASHER GROW. A5 A.304	4	4	4	4	8	8		
7	Z270330000	INFERIOR PORTICO COMPLETO	COMPLETE LOWER GANTRY	2	2	2	2	2	2		
	Q232040000	ARANDELA A6	WASHER A6	4	4	4	4	4	4		
	Q212031000	TUERCA SOMBRERETE M5	COWL NUT M5	4	4	4	4	4	4		
	Q262030000	ARANDELA GROW. A5 A.304	WASHER GROW. A5 A.304	4	4	4	4	4	4		
8	Z270332000	SUPERIOR PORTICO COMPLETO	COMPLETE UPPER GANTRY	2	2	2	2	2	2		
	Q232040000	ARANDELA A6	WASHER A6	9	9	9	9	9	9		
	Q212031000	TUERCA SOMBRERETE M5	COWL NUT M5	9	9	9	9	9	9		
	Q262030000	ARANDELA GROW. A5 A.304	WASHER GROW. A5 A.304	9	9	9	9	9	9		
9	Z270351000	CAJA SOLDADA	WELDED BOX	1	1	1	1	1	1		

MOD.	LAVAVAJILLAS COMPACTOS COMPACT DISHWASHERS	ZONA	TUNEL DE LAVADO Y ACLARADO WASH AND RINSE TUNNEL	PLANO	C-2121

ITEM	CODIGO	DENOMINACION	TEXTO	FI-160 I ECO-160 I	FI-160 D ECO-160 D	FI-200 I ECO-200 I	FI-200 D ECO-200 D	FI-200 W L	FI-200 W R		NOTAS
10	Z270515000	AMARRE RESORTE	SPRING FASTENING	2	2	2	2	2	2		ELIMINADO 06.02.09
10	Z270517000	AMARRE RESORTE	SPRING FASTENING	2	2	2	2	2	2		INTRODUCIDO 06.02.09
	Q152004000	TORNILLO APLASTADO M5x13 A304	FLAT HEADED BOLT M5x13 A304	2	2	2	2	2	2		
	Q262030000	ARANDELA GROW. A5 A.304	WASHER GROW. A5 A.304	6	6	6	6	6	6		
	Q232040000	ARANDELA A6	WASHER A6	6	6	6	6	6	6		
	Q212031000	TUERCA SOMBRERETE M5	COWL NUT M5	6	6	6	6	6	6		
11	Z313049000	CUBIERTA POST.CUADRO ELECT.	ELECT. PANEL REAR COVER	1	1	1	1	1	1		
	Q232040000	ARANDELA A6	WASHER A6	34	34	34	34	34	34		
	Q262040000	ARANDELA GROW. A6 A.304	WASHER GROW. A6 A.304	34	34	34	34	34	34		
	Q162040000	TUERCA EXAGONAL M6	HEXAGONAL NUT M6	16	16	16	16	16	16		
	Q212040000	TUERCA SOMBRERETE M6	COWL NUT M6	14	14	14	14	14	14		
12	Z273046000	GUIA TOMA CORRIENTE	POWER SOCKET GUIDE	_	_	_	_	1	1		
13	Z270511000	SOPORTE RESORTE	SPRING SUPPORT	2	2	2	2	2	2		
	Z270514000	EJE RESORTE	SPRING SHAFT	2	2	2	2	2	2		
	Q352001000	PASADOR DE ALETAS 2X20	COTTER PIN 2X20	4	4	4	4	4	4		
	Q232040000	ARANDELA A6	WASHER A6	4	4	4	4	4	4		
	Q262030000	ARANDELA GROW. A5 A.304	WASHER GROW. A5 A.304	4	4	4	4	4	4		
	Q212031000	TUERCA SOMBRERETE M5	COWL NUT M5	4	4	4	4	4	4		
14	Z270513000	RESORTE FUERZA CONSTANTE	CONSTANT FORCE SPRING	2	2	2	2	2	2		
	Z270512000	ENCAJE RESORTE	SPRING SOCKET	4	4	4	4	4	4		
15	Z270531000	SUJECION PUERTA	DOOR FASTENING	1	1	1	1	1	1		ELIMINADO 10.02.09
S/Nº	Z510556000	SOPORTE ENGANCHE PUERTA	SUPPORT DOOR LATCH	1	1	1	1	1	1		INTRODUCIDO 10.02.09
S/Nº	Z510550000	ENGANCHE PUERTA COMPLETO	FULL DOOR HOOK	1	1	1	1	1	1		INTRODUCIDO 10.02.09
	Q212031000	TUERCA SOMBRERETE M5	COWL NUT M5	2	2	2	2	2	2		
16	Z200550000	ASA PUERTA COMPLETA	COMPLETE DOOR HANDLE	1	1	1	1	1	1		
	Q308007000	ARANDELA DUBO 5	WASHER DUBO 5	2	2	2	2	2	2		
	Q162030000	TUERCA EXAGONAL M5	HEXAGONAL NUT M5	2	2	2	2	2	2		
17	Z270501000	PUERTA MONTADA	FITTED DOOR	1	1	1	1	1	1		
	Z270516000	TOPE	STOP	2	2	2	2	2	2		
	Z200506000	IMAN	MAGNET	1	1	1	1	1	1		
S/Nº	Z276122000	CHECK LIST ARRASTRE FAGOR	CHECK LIST	1	1	1	1	1	1		INTRODUCIDO 19.07.10

MOD.	LAVAVAJILLAS COMPACTOS COMPACT DISHWASHERS	ZONA	TUNEL DE LAVADO Y ACLARADO WASH AND RINSE TUNNEL	PLANO	C-2121

ITEM	CODIGO	DENOMINACION	TEXTO	FI-160 I ECO-160 I	FI-160 D ECO-160 D	FI-200 I ECO-200 I	FI-200 D ECO-200 D	FI-200 W L	FI-200 W R		NOTAS
18	Z270327000	APOYO CORTINA	CURTAIN SUPPORT	1	1	1	1	1	1		
	Q262030000	ARANDELA GROW. A5 A.304	WASHER GROW. A5 A.304	3	3	3	3	3	3		
	Q232040000	ARANDELA A6	WASHER A6	3	3	3	3	3	3		
	Q212031000	TUERCA SOMBRERETE M5	COWL NUT M5	3	3	3	3	3	3		
19	Z270334000	PERFIL	PROFILE	4	4	4	4	4	4		
20	Z270336000	GUIA PUERTA	DOOR GUIDE	2	2	2	2	2	2		
	Q152045000	TORNILLO AMARRE M6X25	FASTENING BOLT M6X25	8	8	8	8	8	8		
	Q232040000	ARANDELA A6	WASHER A6	8	8	8	8	8	8		
	Q222012000	TUERCA AUTOBLOCANTE M6	SELF-LOCKING NUT M6	8	8	8	8	8	8		
21	Z270329000	FRONTAL PORTICO DERECHO	RIGHT GANTRY FRONT	1	1	1	1	1	1		
S/Nº	Z270328000	FRONTAL PORTICO IZQUIERDO	LEFT GANTRY FRONT	1	1	1	1	1	1		
	Q212031000	TUERCA SOMBRERETE M5	COWL NUT M5	2	2	2	2	2	2		
	Q262030000	ARANDELA GROW. A5 A.304	WASHER GROW. A5 A.304	2	2	2	2	2	2		
	Q232040000	ARANDELA A6	WASHER A6	2	2	2	2	2	2		
22	Z272936000	PANEL LATERAL	SIDE PANEL	1	1	1	1	1	1		
23	Z272906000	SUJECION PANELES	PANEL FASTENING	2	2	2	2	2	2		
24	Z272933000	PANEL FRONTAL COMPLETO	COMPLETE FRONT PANEL	1	1	1	1	1	1		
25	Z275078000	UÑA ARRASTRE DERECHA LASER	LASER RIGHT DRAG CLAW	9	9	9	9	9	9		
26	Z275077000	UÑA ARRASTRE IZQUIERDA LASER	LASER LEFT DRAG CLAW	9	9	9	9	9	9		
	Q232050000	ARANDELA A8	WASHER A8	36	36	36	36	36	36		
	Q152046000	TORNILLO EXAGON. CON CUELLO	HEXAGONAL BOLT. WITH NECK	18	18	18	18	18	18		
	Q232040000	ARANDELA A6	WASHER A6	18	18	18	18	18	18		
	Q222012000	TUERCA AUTOBLOCANTE M6	SELF-LOCKING NUT M6	18	18	18	18	18	18		
27	Z275051000	SOPORTE UÑAS DE LAVADO	WASH CLAW SUPPORT	1	1	1	1	1	1		
28	Z275065000	GUIA LAVADO ANTER. IZQUIERDO	LEFT FRONT WASH GUIDE	1	_	1	_	1	_		
28	Z275066000	GUIA LAVADO ANTER. DERECHO	RIGHT FRONT WASH GUIDE	_	1	_	1	_	1		
29	Z271211000	"U" SOPORTE PULSADORES	BUTTON U SUPPORT	4	4	4	4	4	4		
	Q262030000	ARANDELA GROW. A5 A.304	WASHER GROW. A5 A.304	8	8	8	8	8	8		
	Q232040000	ARANDELA A6	WASHER A6	8	8	8	8	8	8		
	Q212031000	TUERCA SOMBRERETE M5	COWL NUT M5	8	8	8	8	8	8		

MOD.	LAVAVAJILLAS COMPACTOS COMPACT DISHWASHERS	ZONA	TUNEL DE LAVADO Y ACLARADO WASH AND RINSE TUNNEL	PLANO	C-2121

ITEM	CODIGO	DENOMINACION	TEXTO	FI-160 I ECO-160 I	FI-160 D ECO-160 D	FI-200 I ECO-200 I	FI-200 D ECO-200 D	FI-200 W L	FI-200 W R		NOTAS
30	Z271205000	PULSADOR ACLARADO IZQUIERD.	LEFT RINSE BUTTON	1	_	1	_	1	_		
S/Nº	Z271222000	PULSADOR ACLARADO DERECHO	RIGHT RINSE BUTTON	_	1	_	1	_	1		
	Z271203000	MUELLE TORS. IZDO 27601	LEFT TORS. SPRING 27601	2	2	2	2	2	2		
	Z271204000	MUELLE TORS. DCHO 27561	RIGHT TORS. SPRING 27561	2	2	2	2	2	2		
31	Z271201000	SOPORTE PULSADOR	BUTTON SUPPORT	4	4	4	4	4	4		
	Q262030000	ARANDELA GROW. A5 A.304	WASHER GROW. A5 A.304	8	8	8	8	8	8		
	Q232040000	ARANDELA A6	WASHER A6	8	8	8	8	8	8		
	Q212031000	TUERCA SOMBRERETE M5	COWL NUT M5	8	8	8	8	8	8		
32	Z100522000	INTERRUPTOR MAGNETICO AC	MAGNETIC SWITCH AC	3	3	3	3	3	3		
	Q242020000	ARANDELA ABANICO A4 A.304	FAN WASHER A4 A.304	6	6	6	6	6	6		
	Q162020000	TUERCA EXAGONAL M4	HEXAGONAL NUT M4	6	6	6	6	6	6		
33	Z271251000	PULSADOR LAVADO IZQUIERDO	LEFT WASH BUTTON	1	_	1	_	_	_		
33	Z271246000	PULSADOR LAVADO IZQUIERDO W	LEFT WASH BUTTON W	_	_	_	_	1	_		
33	Z271253000	PULSADOR LAVADO DERECHO	RIGHT WASH BUTTON	_	1	_	1	_	_		
33	Z271247000	PULSADOR LAVADO DERECHO W	RIGHT WASH BUTTON W	_	_	_	_	_	1		
34	Z271213000	ESCUADRA SOPORTE	SUPP. BRACKET	1	1	1	1	1	1		
	Q152004000	TORNILLO APLASTADO M5x13 A304	FLAT HEADED BOLT M5x13 A304	2	2	2	2	2	2		
	Q262030000	ARANDELA GROW. A5 A.304	WASHER GROW. A5 A.304	2	2	2	2	2	2		
	Q232040000	ARANDELA A6	WASHER A6	2	2	2	2	2	2		
	Q212031000	TUERCA SOMBRERETE M5	COWL NUT M5	2	2	2	2	2	2		
35	Z271207000	IMAN	MAGNET	2	2	2	2	2	2		
	Z271206000	SOPORTE IMAN	MAGNET BRACKET	2	2	2	2	2	2		
	Q072033000	TORN.G.S. M5X20 A304	BOLT G.S. M5X20 A304	2	2	2	2	2	2		
	Q212031000	TUERCA SOMBRERETE M5	COWL NUT M5	2	2	2	2	2	2		
	Q232030000	ARANDELA A5	WASHER A5	2	2	2	2	2	2		
	Q162040000	TUERCA EXAGONAL M6	HEXAGONAL NUT M6	4	4	4	4	4	4		
36	Z275075000	DESLIZAMIENTO GUIAS	GUIDE SLIDE	4	4	4	4	4	4		
	Q232040000	ARANDELA A6	WASHER A6	8	8	8	8	8	8		
	Q222012000	TUERCA AUTOBLOCANTE M6	SELF-LOCKING NUT M6	8	8	8	8	8	8		
	Q012042000	TORNILLO EXAGONAL M6X15	HEXAGONAL BOLT M6x15	4	4	4	4	4	4		
	Q262040000	ARANDELA GROW. A6 A.304	WASHER GROW. A6 A.304	4	4	4	4	4	4		

MOD.	LAVAVAJILLAS COMPACTOS COMPACT DISHWASHERS	ZONA	TUNEL DE LAVADO Y ACLARADO WASH AND RINSE TUNNEL	PLANO	C-2121

ITEM	CODIGO	DENOMINACION	TEXTO	FI-160 I ECO-160 I	FI-160 D ECO-160 D	FI-200 I ECO-200 I	FI-200 D ECO-200 D	FI-200 W L	FI-200 W R		NOTAS
37	Z275034000	GUIA POSTERIOR LAVADO	REAR WASH GUIDE	1	1	1	1	1	1		
	Z310341000	ARANDELA RECTANGULAR	RECTANGULAR WASHER	4	4	4	4	4	4		
	Q162040000	TUERCA EXAGONAL M6	HEXAGONAL NUT M6	4	4	4	4	4	4		
	Q232040000	ARANDELA A6	WASHER A6	8	8	8	8	8	8		
	Q212031000	TUERCA SOMBRERETE M5	COWL NUT M5	8	8	8	8	8	8		
	Q262030000	ARANDELA GROW. A5 A.304	WASHER GROW. A5 A.304	8	8	8	8	8	8		

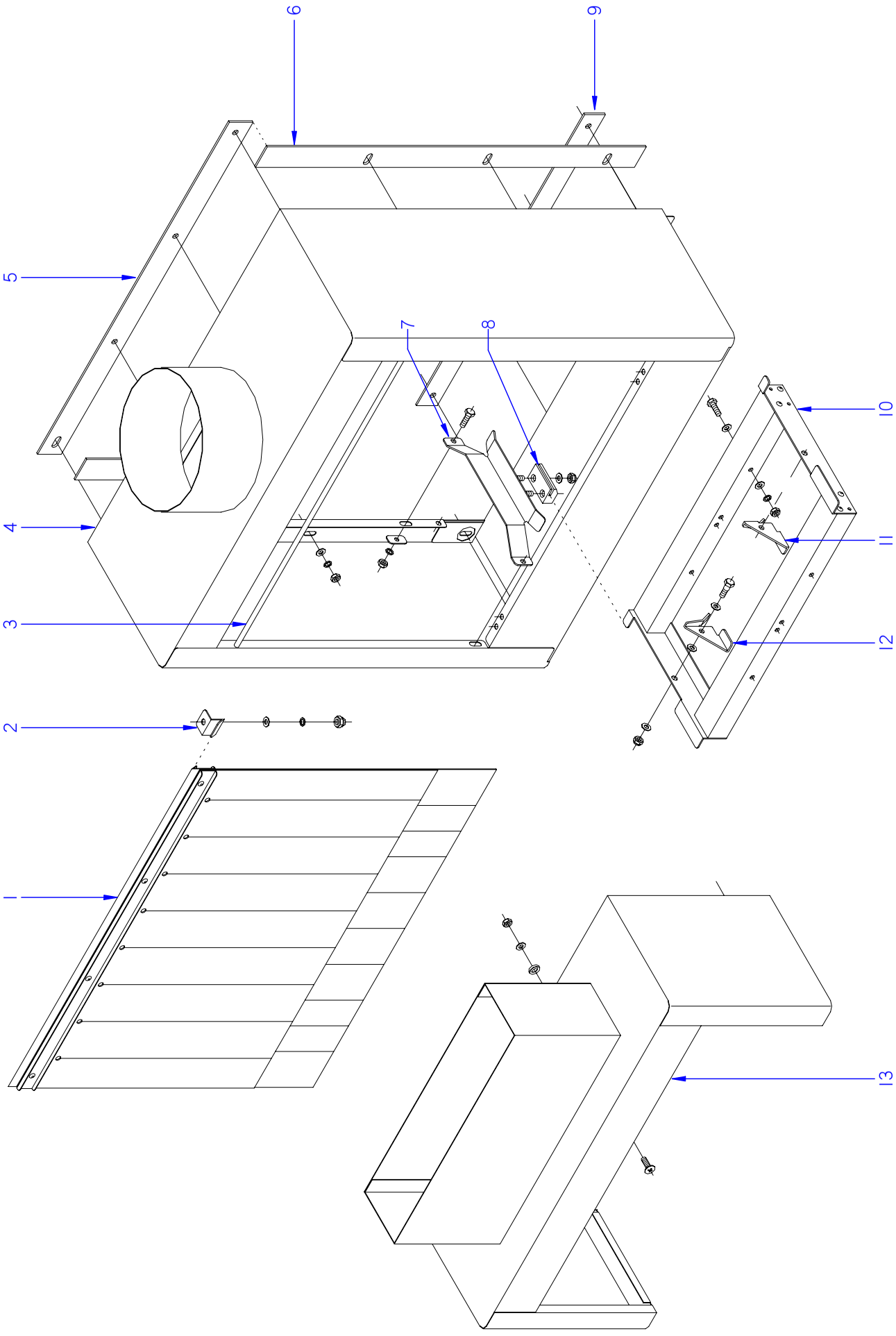

ITEM MARCADO EN COLOR = REPUESTO RECOMENDADO
COLOURED ITEM = RECOMMENDED SPARE PART

N plano	Firma	Fecha	Aparato	Lamina	
C-2122		2008-10	TUNEL ASPIRADOR DE VAHOS LAVAVAJILLAS COMPACTOS	3	Fagor Industrial S.Coop. Oñate

MOD.	LAVAVAJILLAS COMPACTOS COMPACT DISHWASHERS	ZONA	TUNEL ASPIRADOR DE VAHOS STEAM INTAKE TUNNEL	PLANO	C-2122

ITEM	CODIGO	DENOMINACION	TEXTO	FI-160 ECO-160	FI-200 ECO-200	FI-200 W					NOTAS
1	Z276419000	CORTINA EXTERIOR COMPLETA	COMPLETE EXTERIOR CURTAIN	2	2	2					
	Q302022000	ARANDELA 16X6X1.2 A.304	WASHER 16X6X1.2 A.304	12	12	12					
	Q262040000	ARANDELA GROW. A6 A304	WASHER GROW. A6 A304	12	12	12					
	Q162040000	TUERCA EXAGONAL M6	HEXAGONAL NUT M6	12	12	12					
2	Z270326000	SUJECION CORTINA	CURTAIN FASTENING	2	2	_					
	Q262040000	ARANDELA GROW. A6 A.304	WASHER GROW. A6 A.304	2	2	_					
	Q232040000	ARANDELA A6	WASHER A6	2	2	_					
	Q212040000	TUERCA SOMBRERETE M6	COWL NUT M6	2	2	_					
3	Z276520000	PROTECTOR SUPER. SOLDADO	UPPER PROTECTION WELDED	1	1	1					
	Q262030000	ARANDELA GROW. A5 A.304	WASHER GROW. A5 A.304	2	2	2					
	Q232030000	ARANDELA A5	WASHER A5	2	2	2					
	Q012032000	TORNILLO EXAGONAL M5X15	HEXAGONAL BOLT M5x15	2	2	2					
4	Z276501000	TUNEL ASPIRADOR VAHOS COMP.	COMP. STEAM EXTRACTOR TUN	1	1	_					
5	Z276206000	JUNTA SUPERIOR COMPACTO	COMPACT UPPER JOINT	1	1	_					
6	Z276208000	JUNTA LATERAL COMPACTO	COMPACT SIDE JOINT	2	2	_					
7	Z276215000	GUIA ENTRADA-SALIDA	INPUT-OUTPUT GUIDE	2	2	_					
	Q012042000	TORNILLO EXAGONAL M6X15 A304	HEXAGONAL BOLT M6x15 A304	4	4	_					
	Q262040000	ARANDELA GROW. A6 A.304	WASHER GROW. A6 A.304	4	4	_					
	Z310341000	ARANDELA RECTANGULAR	RECTANGULAR WASHER	4	4	_					
	Q162040000	TUERCA EXAGONAL M6	HEXAGONAL NUT M6	4	4	_					
8	Z275075000	DESLIZAMIENTO GUIAS	GUIDE SLIDE	2	2	_					
	Q232040000	ARANDELA A6	WASHER A6	4	4	_					
	Q222012000	TUERCA AUTOBLOCANTE M6	SELF-LOCKING NUT M6	4	4	_					
9	Z276207000	JUNTA INFERIOR COMPACTO	COMPACT LOWER GUIDE	1	1	_					
10	Z276221000	SOPORTE UÑA ENTRADA	INPUT CLAW SUPPORT	1	1	_					
	Q012042000	TORNILLO EXAGONAL M6X15 A304	HEXAGONAL BOLT M6x15 A304	2	2	_					
	Q232050000	ARANDELA A8	WASHER A8	4	4	_					
	Q232040000	ARANDELA A6	WASHER A6	2	2	_					
	Q222012000	TUERCA AUTOBLOCANTE M6	SELF-LOCKING NUT M6	2	2	_					
11	Z275077000	UÑA ARRASTRE IZQUIERDA LASER	LASER LEFT DRAG CLAW	1	1	_					

MOD.	LAVAVAJILLAS COMPACTOS COMPACT DISHWASHERS	ZONA	TUNEL ASPIRADOR DE VAHOS STEAM INTAKE TUNNEL	PLANO	C-2122

ITEM	CODIGO	DENOMINACION	TEXTO	FI-160 ECO-160	FI-200 ECO-200	FI-200 W					NOTAS
12	Z275078000	UÑA ARRASTRE DERECHA LASER	LASER RIGHT DRAG CLAW	1	1	_					
	Q232050000	ARANDELA A8	WASHER A8	4	4	_					
	Q152046000	TORNILLO EXAGON. CON CUELLO	HEXAGONAL BOLT. WITH NECK	2	2	_					
	Q232040000	ARANDELA A6	WASHER A6	2	2	_					
	Q222012000	TUERCA AUTOBLOCANTE M6	SELF-LOCKING NUT M6	2	2	_					
13	Z276293000	TUNEL ASPIRAD. VAHOS W COMP.	COMP. W STEAM EXTRAC.TUNN	_	_	1					

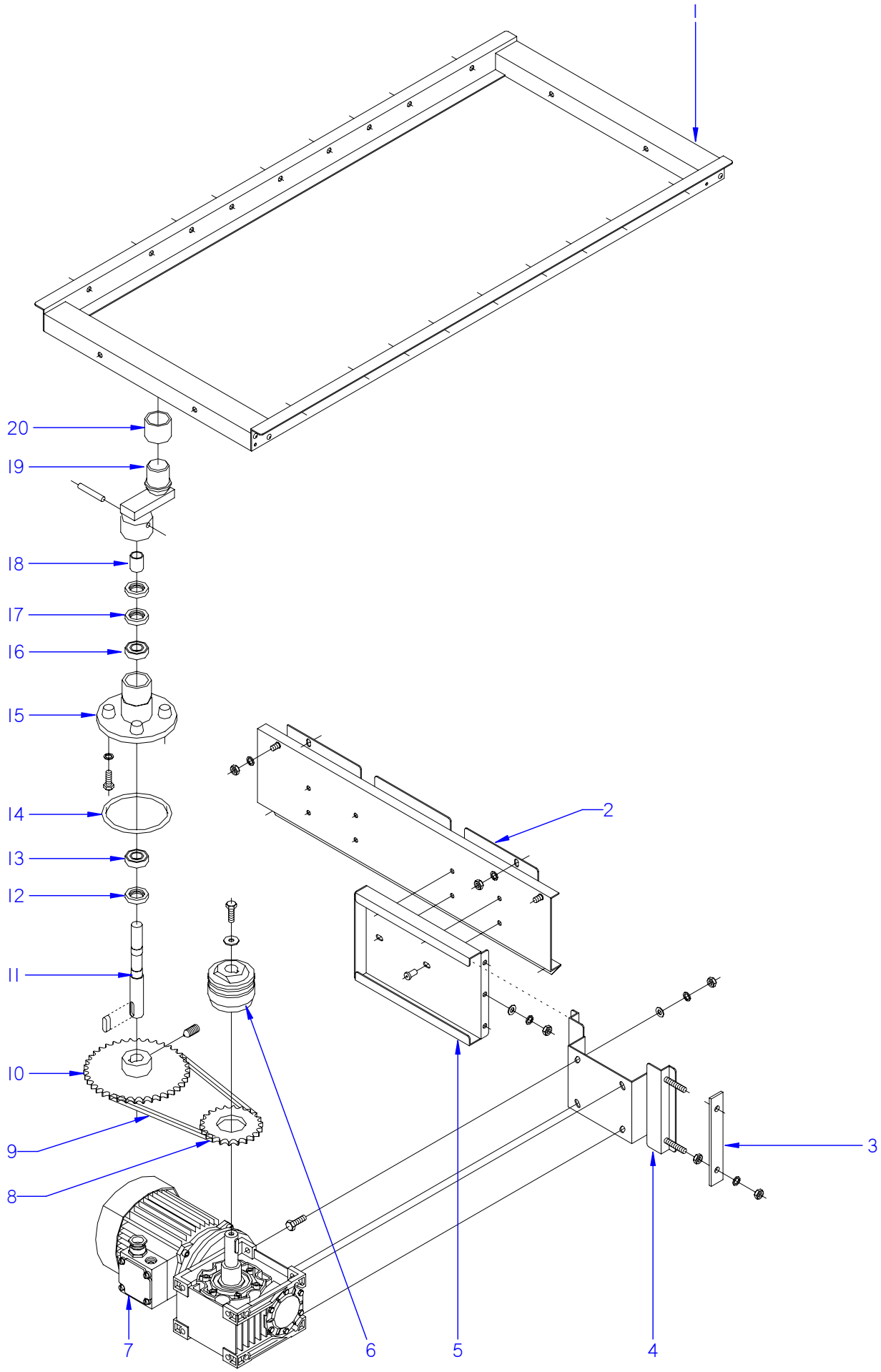

ITEM MARCADO EN COLOR = REPUESTO RECOMENDADO
COLOURED ITEM = RECOMMENDED SPARE PART

N plano	Firma	Fecha	Aparato		Lamina	
C-2123		2008-10	SISTEMA DE ARRASTRE	LAVAVAJILLAS COMPACTOS	4	Fagor Industrial S.Coop. FAGOR Oñate

MOD.	LAVAVAJILLAS COMPACTOS COMPACT DISHWASHERS	ZONA	SISTEMA DE ARRASTRE / SWEEP ZONE	PLANO	C-2123

ITEM	CODIGO	DENOMINACION	TEXTO	FI-160 ECO-160	FI-200 ECO-200	FI-200 W					NOTAS
1	Z275051000	SOPORTE UÑAS DE LAVADO	WASH CLAW SUPPORT	1	1	1					
2	Z270113000	SOPORTE TRANSVERSAL	TRANSVERSAL SUPPORT	1	1	1					
	Q262040000	ARANDELA GROW. A6 A.304	WASHER GROW. A6 A.304	4	4	4					
	Q162040000	TUERCA EXAGONAL M6	HEXAGONAL NUT M6	4	4	4					
	Q221343000	REMACHE EXAGONAL M6	HEXAGONAL RIVET M6	11	11	11					
3	Z275006000	TENSOR	TENSIONER	1	1	1					
	Q162050000	TUERCA EXAGONAL M8x1 INOX.	HEXAGONAL NUT M8x1 INOX.	3	3	3					
	Q262050000	ARANDELA GROW. A8 A.304	WASHER GROW. A8 A.304	3	3	3					
4	Z275002000	SOPORTE MOTORREDUCTOR	GEARED MOTOR SUPPORT	1	1	1					
	Q012053000	TORNILLO EXAGONAL M8X20	HEXAGONAL BOLT M8x20	4	4	4					
	Q262050000	ARANDELA GROW. A8 A.304	WASHER GROW. A8 A.304	4	4	4					
	Q162050000	TUERCA EXAGONAL M8x1 INOX.	HEXAGONAL NUT M8x1 INOX.	4	4	4					
5	Z275005000	GUIA MOTORREDUCTOR	GEARED MOTOR GUIDE	1	1	1					
	Q152018000	PERNO SOLDADO M6X10	WELDED BOLT M6X10	2	2	2					
	Q262040000	ARANDELA GROW. A6 A.304	WASHER GROW. A6 A.304	3	3	3					
	Q162040000	TUERCA EXAGONAL M6	HEXAGONAL NUT M6	3	3	3					
6	Z105008000	LIMITADOR DE PAR LS 70	TORQUE LIMITER LS 70	1	1	1					
7	Z275073000	MOTORREDUCTOR SIN-FIN MONTA	WORM GEAR MOTOR MOUNTED	1	_	_					
7	Z295003000	MOTORREDUCTOR SIN-FIN MONTA	WORM GEAR MOTOR MOUNTED	_	1	1					
8	Z105009000	CORONA	CROWN	1	1	_					
8	Z104104000	CORONA 60 Hz,	CROWN 60 Hz,	1	1	1					
9	Z275008000	CADENA IRIS 12.7X7.95X730	IRIS CHAIN 12.7x7.95x730	1	1	1					
	Z105012000	ENGANCHE CADENA SIMPLE	SIMPLE CHAIN FASTENER	1	1	1					
10	Z275007000	PIÑON	PINION	1	_	1					
10	Z105013000	PIÑON	PINION	_	1	_					
	Z105051000	VARILLA ROSCADA M. 8X16	THREADED ROD M-8x16	1	1	1					
11	Z275011000	EJE	SHAFT	1	1	1					
	Z105014000	CHAVETA 25X6X6	COTTER PIN 25X6X6	1	1	1					
12	Z105016000	RETEN RADIAL 20x35x7	RADIAL SEAL 20x35x7	1	1	1					
13	Z105017000	RODAMIENTO 6003-2RS	BEARING 6003 - 2RS	1	1	1					
14	Q307045000	JUNTA TORICA 105.28x94.62	"O" RING 105.28x94.62	1	1	1					

MOD.	LAVAVAJILLAS COMPACTOS COMPACT DISHWASHERS	ZONA	SISTEMA DE ARRASTRE / SWEEP ZONE	PLANO	C-2123

ITEM	CODIGO	DENOMINACION	TEXTO	FI-160 ECO-160	FI-200 ECO-200	FI-200 W					NOTAS
15	Z275021000	SOPORTE RODAMIENTOS	BEARING SUPPORT	1	1	1					
	Q012053000	TORNILLO EXAGONAL M8X20	HEXAGONAL BOLT M8x20	4	4	4					
	Q262050000	ARANDELA GROW. A8 A.304	WASHER GROW. A8 A.304	4	4	4					
16	Z105017000	RODAMIENTO 6003-2RS	BEARING 6003 - 2RS	1	1	1					
17	Z105016000	RETEN RADIAL 20x35x7	RADIAL SEAL 20x35x7	2	2	2					
18	Z105055000	CASQUILLO DISTANCIADOR	SPACER BUSHING	1	1	1					
19	Z275025000	BULON ARRASTRE	DRIVE BOLT	1	1	1					
	Q362000000	PASADOR INOX.6,3x50	PIN INOX.6.3x50	1	1	1					
20	Z105027000	CASQUILLO	BUSHING	1	1	1					

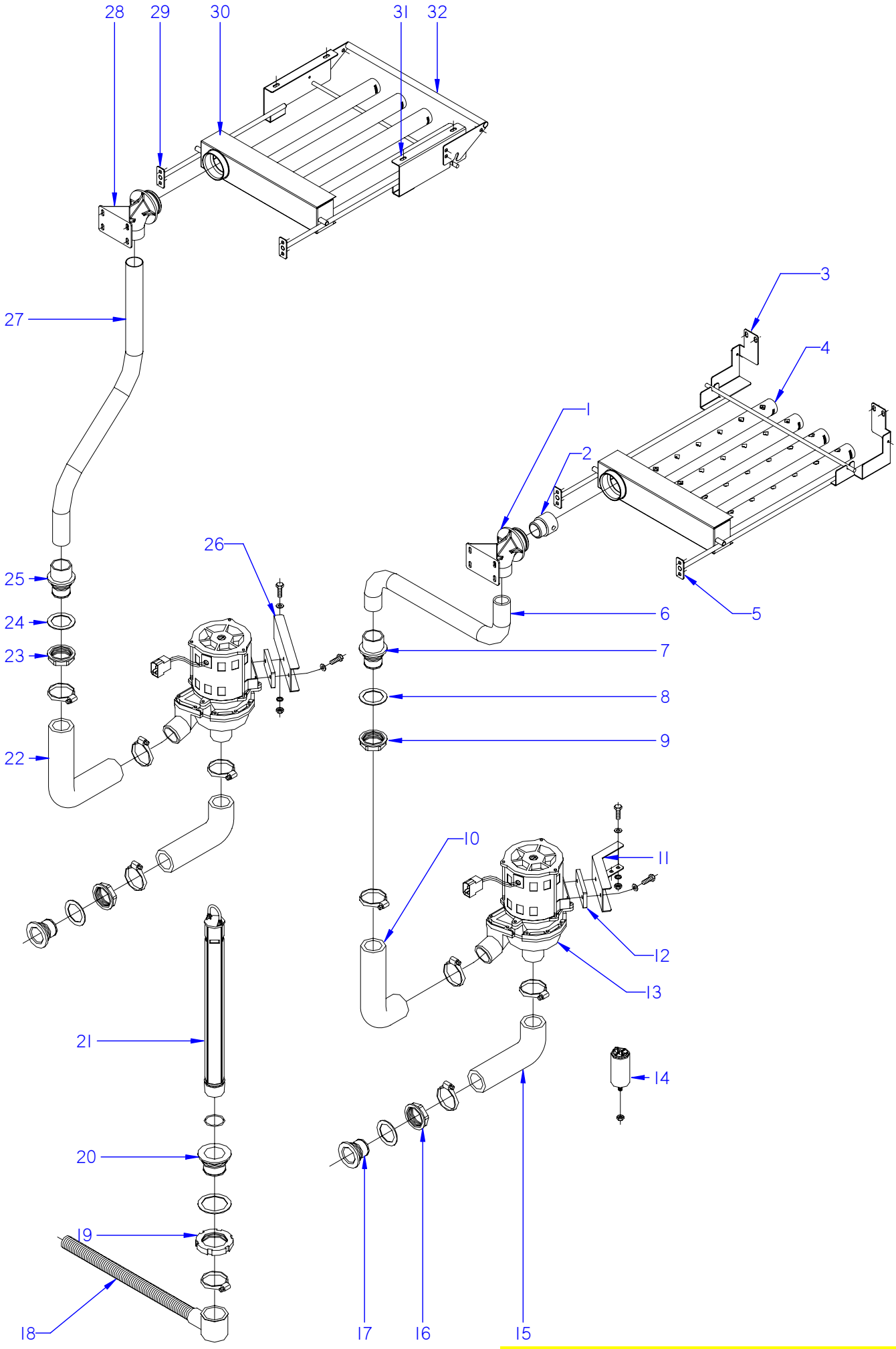

ITEM MARCADO EN COLOR = REPUESTO RECOMENDADO
COLOURED ITEM = RECOMMENDED SPARE PART

N plano	Firma	Fecha	Aparato	SISTEMA DE LAVADO	Lamina	
C-2124		2008-10	LAVAVAJILLAS COMPACTOS		5	Fagor Industrial S.Coop. FAGOR Oñate

MOD.	LAVAVAJILLAS COMPACTOS COMPACT DISHWASHERS	ZONA	SISTEMA DE LAVADO / WASHING SYSTEM	PLANO	C-2124

ITEM	CODIGO	DENOMINACION	TEXTO	FI-160 ECO-160	FI-200 ECO-200	FI-200 W					NOTAS
1	Z330789000	PASAMUROS SUPER. PRELAVADO	PREWASH UPPER BUSHING.	1	1	1					
	Q262040000	ARANDELA GROW. A6 A.304	WASHER GROW. A6 A.304	4	4	4					
	Q232040000	ARANDELA A6	WASHER A6	4	4	4					
	Q162040000	TUERCA EXAGONAL M6	HEXAGONAL NUT M6	4	4	4					
2	Z330787000	REDUCCION PRELAVADO	PREWASH REDUCTION	1	1	1					
3	Z370711000	SOPORTE INFERIOR DERECHO	RIGHT LOWER SUPPORT	1	1	1					
	Q262040000	ARANDELA GROW. A6 A.304	WASHER GROW. A6 A.304	4	4	4					
	Q232040000	ARANDELA A6	WASHER A6	4	4	4					
	Q162040000	TUERCA EXAGONAL M6	HEXAGONAL NUT M6	4	4	4					
4	Z270761000	DISTRIBUIDOR COMPACTO DCHO.	RIGHT COMPACT DISTRIBUTOR	1	1	1					
	Z270721000	TAPON CIERRE	CLOSING PLUG	4	4	4					
	Q307062000	JUNTA TORICA 23.47X28.71X2.62	O-RING 23.47X28.71X2.62	4	4	4					
5	Z370715000	SOPORTE INFERIOR IZQUIERDO	LEFT LOWER SUPPORT	1	1	1					
	Q262040000	ARANDELA GROW. A6 A.304	WASHER GROW. A6 A.304	4	4	4					
	Q232040000	ARANDELA A6	WASHER A6	4	4	4					
	Q162040000	TUERCA EXAGONAL M6	HEXAGONAL NUT M6	4	4	4					
6	Z330774000	CONDUC. INF. DCHA. PRELAVADO	PREWASH RIGHT LOW. PIPE	1	1	1					
7	Z330751000	PASAMUROS IMPULSION PRELAV.	PREWASH IMPULSE BUSHING	1	1	1					ELIMINADO 06.02.09
7	Z330790000	PASAMUROS IMPULSION PRELAV.	PREWASH IMPULSE BUSHING	1	1	1					INTRODUCIDO 06.02.09
8	Q307058000	ARANDELA Ø60x44X2	WASHER Ø60x44X2	1	1	1					
9	Z710708000	TUERCA PASAMUROS	WALL BUSHING NUT	1	1	1					
	Q307065000	JUNTA TORICA Ø43,01X37,77X2.62	O-RING Ø43.01X37.77X2.62	1	1	1					
10	Z710905000	CONDUCTO IMPULSION ANTER.	FRONT IMPULSE PIPE	1	1	1					
	Q881307000	ABRAZADERA 40-60	CLAMP 40-60	2	2	2					
11	Z711001000	SOPORTE MOTOBOMBA ANTER.	FRONT MOTOR PUMP SUPPORT	1	1	1					
12	Z201003000	BASE BOMBA LAVADO 1003016	WASH PUMP BASE 1003016	2	2	2					
	Q232040000	ARANDELA A6	WASHER A6	4	4	4					
	Q012042000	TORNILLO EXAGONAL M6X15	HEXAGONAL BOLT M6x15	4	4	4					
13	Z201011000	BOMBA DE LAVADO	WASH PUMP	2	2	_					
13	Z203511000	BOMBA DE LAVADO 60 Hz.	WASH PUMP 60 Hz.	2	2	2					

MOD.	LAVAVAJILLAS COMPACTOS COMPACT DISHWASHERS	ZONA	SISTEMA DE LAVADO / WASHING SYSTEM	PLANO	C-2124

ITEM	CODIGO	DENOMINACION	TEXTO	FI-160 ECO-160	FI-200 ECO-200	FI-200 W					NOTAS
14	V321300000	CONDENSADOR 10 M.F.	CONDENSER 10 M.F.	2	2	2					
	Q162050000	TUERCA EXAGONAL M8x1 INOX.	HEXAGONAL NUT M8x1 INOX.	2	2	2					
15	Z710904000	CONDUCTO ASPIRACION	EXTRACTOR PIPE	2	2	2					
	Q881307000	ABRAZADERA 40-60	CLAMP 40-60	2	2	2					
16	Z710708000	TUERCA PASAMUROS	WALL BUSHING NUT	2	2	2					
17	Z710903000	PASAMUROS ASPIRACION	EXTRACTOR BUSHING	2	2	2					
	Q307058000	ARANDELA Ø60x44X2	WASHER Ø60x44X2	2	2	2					
18	Z200910000	MANGUERA DESAGUE	DRAINAGE HOSE	1	1	1					
	Q881307000	ABRAZADERA 40-60	CLAMP 40-60	1	1	1					
19	Q220001000	TUERCA RANURADA M56X2,5 HOS	GROOVED NUT M56X2.5 HOS	1	1	1					
20	Z710902000	PASAMUROS DESAGUE	DRAINAGE BUSHING	1	1	1					
	Q307059000	JUNTA Ø72x56x2	JOINT Ø72x56x2	1	1	1					
21	Z270901000	ALIVIADERO	OVERFLOW	1	1	1					
	Q307051000	JUNTA TORICA Ø36.17X41.41X2.6	O-RING Ø36.17X41.41X2.6	1	1	1					
22	Z710906000	CONDUCTO IMPULSION POSTER.	REAR IMPULSE PIPE	1	1	1					
	Q881307000	ABRAZADERA 40-60	CLAMP 40-60	2	2	2					
23	Z710708000	TUERCA PASAMUROS	WALL BUSHING NUT	1	1	1					
	Q307065000	JUNTA TORICA Ø43,01X37,77X2.62	O-RING Ø43.01X37.77X2.62	1	1	1					
24	Q307058000	ARANDELA Ø60x44X2	WASHER Ø60x44X2	1	1	1					
25	Z330751000	PASAMUROS IMPULSION PRELAV.	PREWASH IMPULSE BUSHING	1	1	1					ELIMINADO 06.02.09
25	Z330790000	PASAMUROS IMPULSION PRELAV.	PREWASH IMPULSE BUSHING	1	1	1					INTRODUCIDO 06.02.09
26	Z711002000	SOPORTE MOTOBOMBA POSTER.	REAR MOTOR PUMP SUPPORT	1	1	1					
	Q012042000	TORNILLO EXAGONAL M6X15	HEXAGONAL BOLT M6x15	4	4	4					
	Q232040000	ARANDELA A6	WASHER A6	4	4	4					
	Q262040000	ARANDELA GROW. A6 A.304	WASHER GROW. A6 A.304	4	4	4					
	Q162040000	TUERCA EXAGONAL M6	HEXAGONAL NUT M6	4	4	4					
27	Z330776000	CONDUC. SUP. DCHA PRELAVADO	PREWASH RIGHT UPPER PIPE	1	1	1					
28	Z330789000	PASAMUROS SUPER. PRELAVADO	PREWASH UPPER BUSHING.	1	1	1					
	Q262040000	ARANDELA GROW. A6 A.304	WASHER GROW. A6 A.304	4	4	4					
	Q232040000	ARANDELA A6	WASHER A6	4	4	4					
	Q162040000	TUERCA EXAGONAL M6	HEXAGONAL NUT M6	4	4	4					

MOD.	LAVAVAJILLAS COMPACTOS COMPACT DISHWASHERS	ZONA	SISTEMA DE LAVADO / WASHING SYSTEM	PLANO	C-2124

ITEM	CODIGO	DENOMINACION	TEXTO	FI-160 ECO-160	FI-200 ECO-200	FI-200 W					NOTAS
29	Z370701000	SOPORTE SUPERIOR DERECHO	RIGHT UPPER SUPPORT	1	1	1					
	Q262040000	ARANDELA GROW. A6 A.304	WASHER GROW. A6 A.304	4	4	4					
	Q232040000	ARANDELA A6	WASHER A6	4	4	4					
	Q162040000	TUERCA EXAGONAL M6	HEXAGONAL NUT M6	4	4	4					
30	Z270764000	DISTRIBUIDOR COMPACTO IZDO.	LEFT COMPACT DISTRIBUTOR	1	1	1					
	Z270721000	TAPON CIERRE	CLOSING PLUG	4	4	4					
	Q307062000	JUNTA TORICA 23.47X28.71X2.62	O-RING 23.47X28.71X2.62	4	4	4					
31	Z370705000	SOPORTE SUPERIOR IZQUIERDO	LEFT UPPER SUPPORT	1	1	1					
	Q262040000	ARANDELA GROW. A6 A.304	WASHER GROW. A6 A.304	4	4	4					
	Q232040000	ARANDELA A6	WASHER A6	4	4	4					
	Q162040000	TUERCA EXAGONAL M6	HEXAGONAL NUT M6	4	4	4					
32	Z370725000	SUJECION DISTRIB. PRELAVADO	PREWASH DISTRIB. FASTENING	1	1	1					
	Q152047000	TORNILLO CILINDRI. CON CUELLO	CYLINDRICAL SCREW WITH NEC	2	2	2					
	Q262030000	ARANDELA GROW. A5 A.304	WASHER GROW. A5 A.304	2	2	2					
	Q212031000	TUERCA SOMBRERETE M5	COWL NUT M5	2	2	2					

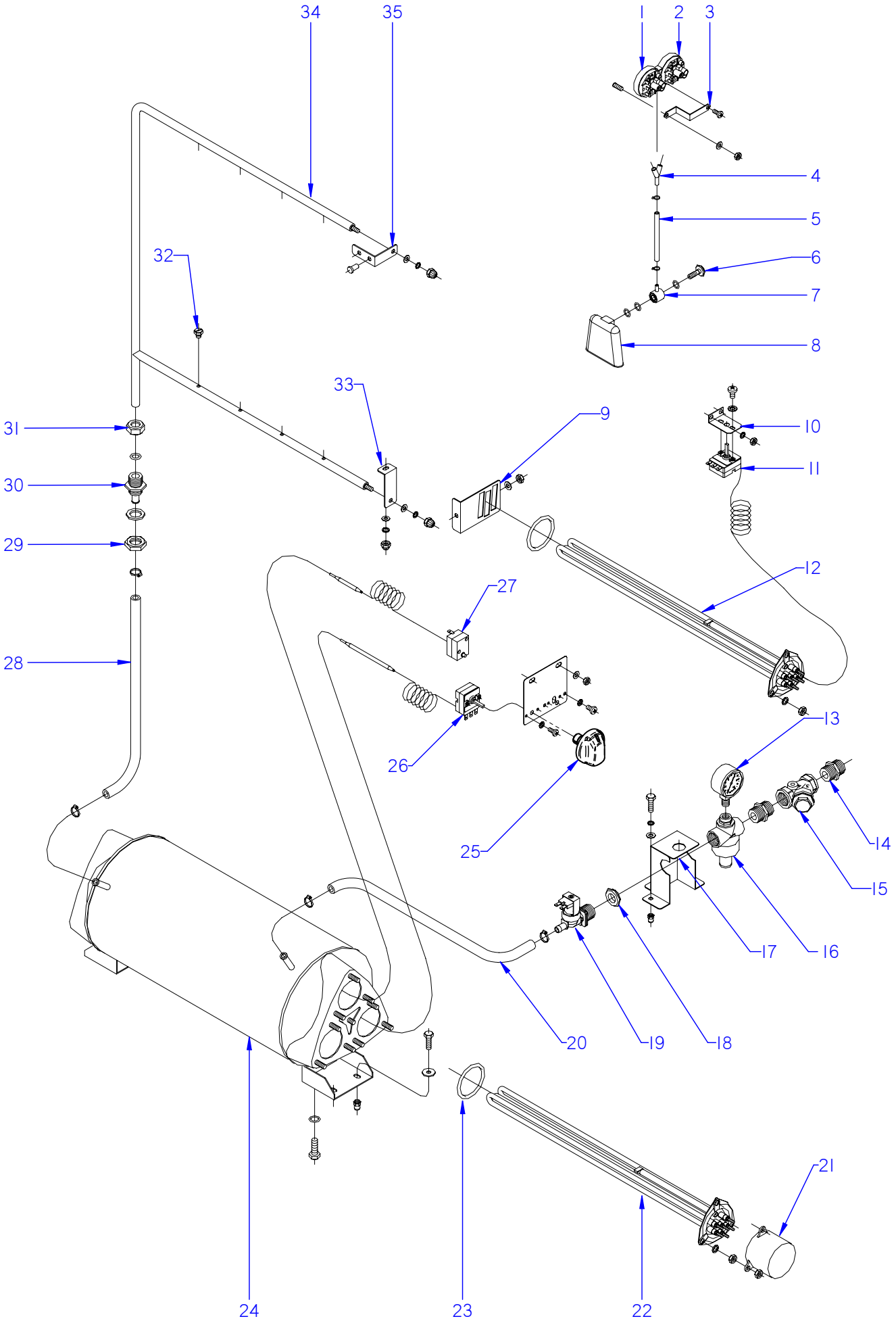

ITEM MARCADO EN COLOR = REPUESTO RECOMENDADO
COLOURED ITEM = RECOMMENDED SPARE PART

N plano	Firma	Fecha	Aparato	SISTEMA DE ACLARADO	Lamina	
C-2125		2008-10	LAVAVAJILLAS COMPACTOS FI / W		6	Fagor Industrial S.Coop. FAGOR Oñate

MOD.	LAVAVAJILLAS COMPACTOS COMPACT DISHWASHERS	ZONA	SISTEMA DE ACLARADO / RINSE SYSTEM	PLANO	C-2125

ITEM	CODIGO	DENOMINACION	TEXTO	FI-160	FI-200	FI-200 W					NOTAS
1	Z403021000	PRESOSTATO SIMPLE	SIMPLE PRESSURE SWITCH	1	1	1					ELIMINADO 12.05.09
2	Z273006000	PRESOSTATO SIMPLE	SIMPLE PRESSURE SWITCH	1	1	1					
3	Z602923000	SOPORTE PRESOSTATO	PRESSURE SWITCH SUPPORT	1	1	1					
	Q082032000	TORNILLO ALOMADO BZ-3,5X9,5	CURVED SCREW BZ-3.5x9.5	1	1	1					
	Q232040000	ARANDELA A6	WASHER A6	1	1	1					
	Q162040000	TUERCA EXAGONAL M6	HEXAGONAL NUT M6	1	1	1					
4	Z103077000	RACORD EN Y	Y-CONNECTION	1	1	1					ELIMINADO 12.05.09
5	3702400000	TUBO GOMA NEGRO D 8*4	BLACK RUBBER PIPE Ø 8*4	1	1	1					
	P102154000	BRIDA ELASTICA TUBO	ELASTIC PIPE FLANGE	2	2	2					
6	Z203013000	TORNILLO PRESOSTATO	PRESSURE SWITCH BOLT	1	1	1					
	Q307003000	JUNTA TORICA 16.01X10.77X2.62	O-RING 16.01X10.77X2.62	3	3	3					
7	Z203012000	EMPALME PRESOSTATO	PRESSURE SWITCH CONNEX	1	1	1					
8	Z203011000	CAMARA PRESOSTATO	PRESSURE SWITCH	1	1	1					
9	Z273602000	SUJECION RESISTENCIA	RESISTOR FASTENING	1	1	1					
	Q232040000	ARANDELA A6	WASHER A6	1	1	1					
	Q162040000	TUERCA EXAGONAL M6	HEXAGONAL NUT M6	1	1	1					
	Q307044000	JUNTA TORICA Ø 67.18x56.52x5.3	O-RING Ø 67.18x56.52x5.3	1	1	1					
10	Z850111000	SOPORTE TERMOSTATO	THERMOSTAT SUPPORT	1	1	1					
	Q232040000	ARANDELA A6	WASHER A6	2	2	2					
	Q162040000	TUERCA EXAGONAL M6	HEXAGONAL NUT M6	2	2	2					
	Q152024000	TORNILLO AVELLANADO M4X8 A304	COUNTERSUNK BOLT M4X8 A304	2	2	2					
11	Z203014000	TERMOSTATO CALDERIN	WASH DRUM THERMOSTAT	2	2	2					
S/Nº	Z273072000	REGULACION TERMOSTATO 63ºC	THERMOSTAT CONTROL 63ºC	1	1	1					INTRODUCIDO 23.01.09
12	Z121741000	RESISTENCIA COMP.230V.	COMP. RESISTOR 230V.	1	1	_					
12	Z271705000	RESISTENCIA W ARRASTRE	DRIVE RESISTOR W	_	_	1					
	Q262040000	ARANDELA GROW. A6 A.304	WASHER GROW. A6 A.304	3	3	3					
	Q162040000	TUERCA EXAGONAL M6	HEXAGONAL NUT M6	3	3	3					
13	Z102316000	MANOMETRO	MANOMETER	1	1	_					
14	Z102301000	MANGUITO 3/4"	HOSE 3/4"	2	2	_					
15	Z102308000	FILTRO 3/4	FILTER 3/4"	1	1	_					
16	Z102307000	REDUCTOR PRESION	PRESSURE REDUCER	1	1	_					

MOD.	LAVAVAJILLAS COMPACTOS COMPACT DISHWASHERS	ZONA	SISTEMA DE ACLARADO / RINSE SYSTEM	PLANO	C-2125

ITEM	CODIGO	DENOMINACION	TEXTO	FI-160	FI-200	FI-200 W					NOTAS
17	Z271120000	SOPORTE CONDUCCION 3/4	PIPE SUPPORT 3/4	1	1	_					
	Q012042000	TORNILLO EXAGONAL M6X15	HEXAGONAL BOLT M6x15	2	2	_					
	Q262040000	ARANDELA GROW. A6 A.304	WASHER GROW. A6 A.304	2	2	_					
18	Q221324000	TUERCA 3/4 GAS	NUT 3/4 GAS	1	1	_					
19	Z701135000	ELECTROVALVULA SIMP.220V	SOLENOID VALVE SIMP.220V	1	1	_					
20	3676900000	TUBO GOMA NEGRA Ø 17*10	BLACK RUBBER PIPE 17*10	1	1	_					
	Q881302000	ABRAZADERA 12-20	CLAMP 12-20	2	2	_					
21	Z101723000	CAPERUZA RESISTENCIA	RESISTOR HOOD	3	3	3					
	Q012042000	TORNILLO EXAGONAL M6X15	HEXAGONAL BOLT M6x15	4	4	4					
	Q301304000	ARANDELA PLANA 23X6,5X2	FLAT WASHER 23X6.5X2	4	4	4					
	Q012063000	TORNILLO EXAGONAL M10X20	HEXAGONAL SCREW M10X20	1	1	1					
22	Z121741000	RESISTENCIA COMP.230V.	COMP. RESISTOR 230V.	3	3	_					
22	Z271705000	RESISTENCIA W ARRASTRE	DRIVE RESISTOR W	_	_	3					
	Q221305000	TUERCA EXAG.AUTOBL. M4 ZINC.	HEX BOLT SELF-LOCK M4 ZINC	18	18	18					
23	Q307044000	JUNTA TORICA Ø 67,18x56,52x5,3	O-RING Ø 67.18x56.52x5.3	3	3	3					
24	Z311701000	CALDERIN	BOILER	1	1	1					
	Q163140000	TUERCA EXAGONAL M6 LATON	HEXAGONAL NUT M6 BRASS	18	18	18					
25	Z203069000	BOTON DE MANDO	CONTROL BUTTON	1	1	1					
S/Nº	Z273037000	SOPORTE TERMOST. A.C.	THERMOSTAT SUPPORT A.C.	2	2	2					
	Q232040000	ARANDELA A6	WASHER A6	6	6	6					
	Q162040000	TUERCA EXAGONAL M6	HEXAGONAL NUT M6	6	6	6					
	Q152024000	TORNILLO AVELLANADO M4X8 A304	COUNTERSUNK BOLT M4X8 A30-	4	4	4					
26	Z203014000	TERMOSTATO CALDERIN	WASH DRUM THERMOSTAT	1	1	1					
S/Nº	Z273073000	REGULACION TERMOSTATO 70ºC	THERMOSTAT CONTROL 70ºC	1	1	1					INTRODUCIDO 23.01.09
27	Z276365000	TERMOSTATO 150ºC	THERMOSTAT 150ºC	1	1	1					
28	3676900000	TUBO GOMA NEGRA Ø 17*10	BLACK RUBBER PIPE 17*10	1	1	1					
	Q881302000	ABRAZADERA 12-20	CLAMP 12-20	2	2	2					
29	Q223023000	TUERCA EXAGONAL 5-8 LATON	HEX NUT 5-8 BRASS	1	1	1					
30	Z271901000	PASAMUROS ACLARADO	RINSE BUSHING	1	1	1					
	Q307032000	JUNTA Ø32X21X3	JOINT Ø32X21X3	1	1	1					
31	Q223108000	TUERCA M.24X2.5	NUT M.24X2.5	1	1	1					

MOD.	LAVAVAJILLAS COMPACTOS COMPACT DISHWASHERS	ZONA	SISTEMA DE ACLARADO / RINSE SYSTEM	PLANO	C-2125

ITEM	CODIGO	DENOMINACION	TEXTO	FI-160	FI-200	FI-200 W					NOTAS
32	Z211903000	TOBERA ACLARADO	RINSE NOZZLE	8	8	8					
33	Z271912000	AMARRE INFERIOR ACLARADO	LOWER RINSE FASTENING	1	1	1					
	Q262030000	ARANDELA GROW. A5 A.304	WASHER GROW. A5 A.304	1	1	1					
	Q232040000	ARANDELA A6	WASHER A6	3	3	3					
	Q212031000	TUERCA SOMBRERETE M5	COWL NUT M5	1	1	1					
34	Z271902000	12Z2719020 ARBOL DE ACLARADO	12Z2719020 RINSE SHAFT	1	1	1					
	Q307063000	JUNTA TORICA 12,29X19,35X3,53	O-RING 12.29X19.35X3.53	1	1	1					
35	Z271911000	SOPORTE SUPERIOR ACLARADO	UPPER RINSE SUPPORT	1	1	1					
	Q412004000	REMACHE MONOBOLT Ø4.8	MONOBOLT RIVET Ø4.8	2	2	2					
	Q262030000	ARANDELA GROW. A5 A.304	WASHER GROW. A5 A.304	1	1	1					
	Q232040000	ARANDELA A6	WASHER A6	1	1	1					
	Q212031000	TUERCA SOMBRERETE M5	COWL NUT M5	1	1	1					

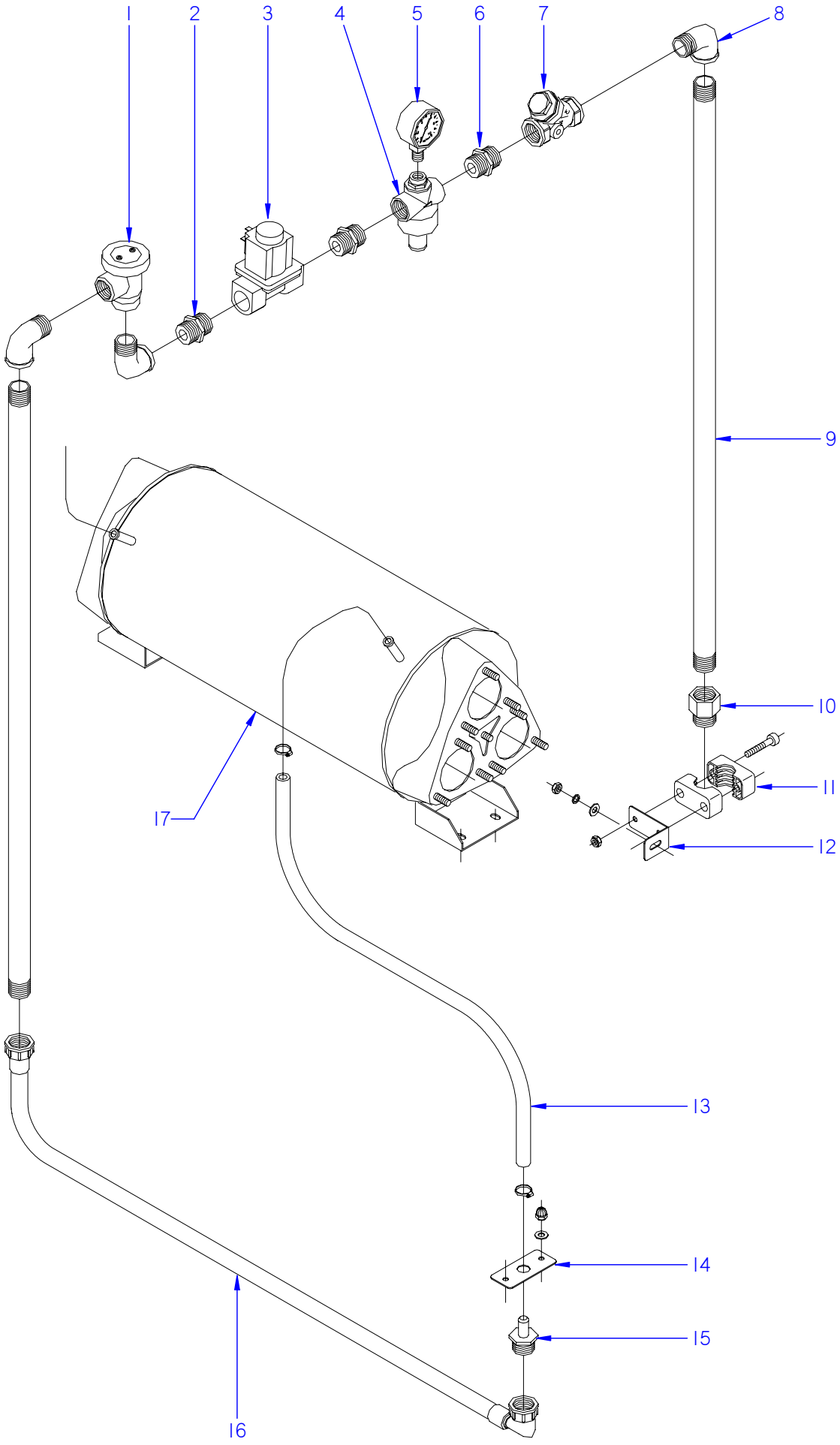

ITEM MARCADO EN COLOR = REPUESTO RECOMENDADO
COLOURED ITEM = RECOMMENDED SPARE PART

N plano	Firma	Fecha	Aparato		Lamina	
C-2126		2008-10	LAVAVAJILLAS COMPACTOS W	ENTRADA DE AGUA	7	Fagor Industrial S.Coop. FAGOR Oñate

MOD.	LAVAVAJILLAS COMPACTOS COMPACT DISHWASHERS	ZONA	ENTRADA DE AGUA / WATER INLET	PLANO	C-2126

ITEM	CODIGO	DENOMINACION	TEXTO	FI-200 W							NOTAS
1	Z718418000	VALVULA ANTIRRETORNO W	NON-RETURN VALVE W	1							
2	Z718453000	MANGUITO 3/4"GAS-NPT	HOSE 3/4" GAS-NPT	2							
3	Z718415000	ELECTROVALVULA USA	SOLENOID VALVE USA	1							
4	Z102307000	REDUCTOR PRESION	PRESSURE REDUCER	1							
5	Z271125000	MANOMETRO W NSF	MANOMETER W NSF	1							
6	Z102301000	MANGUITO 3/4"	HOSE 3/4"	1							
7	Z102308000	FILTRO 3/4	FILTER 3/4"	1							
8	Z718421000	CODO M-H 3/4" LATON	L-BEND M-H 3/4" BRASS	2							
9	Z271121000	CONDUCCION ANTIRRETORNO W	NON-RETURN PIPE W	2							
10	T125033000	ADAPTADOR ROSCA 3/4"-3/4NPT	THREAD ADAPTER 3/4"-3/4NPT	1							
11	Z718413000	BRIDA ADA 3/4 SIN BASE-TOR	FLANGE ADA 3/4 W/O BASE-TOR	8							
	Q052046000	TORNILLO ALLEN M6X40 A.304	ALLEN BOLT M6X40 A.304	8							
	Q301370000	ARANDELA PLANA A13	FLAT WASHER A13	8							
	Q222012000	TUERCA AUTOBLOCANTE M6	SELF-LOCKING NUT M6	8							
12	Z271122000	SOPORTE ANTIRRETORNO	NON-RETURN SUPPORT	4							
	Q232040000	ARANDELA A6	WASHER A6	4							
	Q262040000	ARANDELA GROW. A6 A.304	WASHER GROW. A6 A.304	4							
	Q162040000	TUERCA EXAGONAL M6	HEXAGONAL NUT M6	4							
	Q212040000	TUERCA SOMBRERETE M6	COWL NUT M6	4							
13	3676900000	TUBO GOMA NEGRA Ø 17*10	BLACK RUBBER PIPE 17*10	1							
	Q881302000	ABRAZADERA 12-20	CLAMP 12-20	2							
14	Z271123000	SOPORTE EMPALME 3/4	CONNECTION SUPPORT 3/4"	1							
15	Z102309000	EMPALME 3-4	CONNECTION 3-4'	1							
16	Z602121000	MANGUERA ENTRADA AGUA	WATER INTAKE HOSE	1							
17	Z311701000	CALDER(1200003017)	BOILER (1200003017)	1							

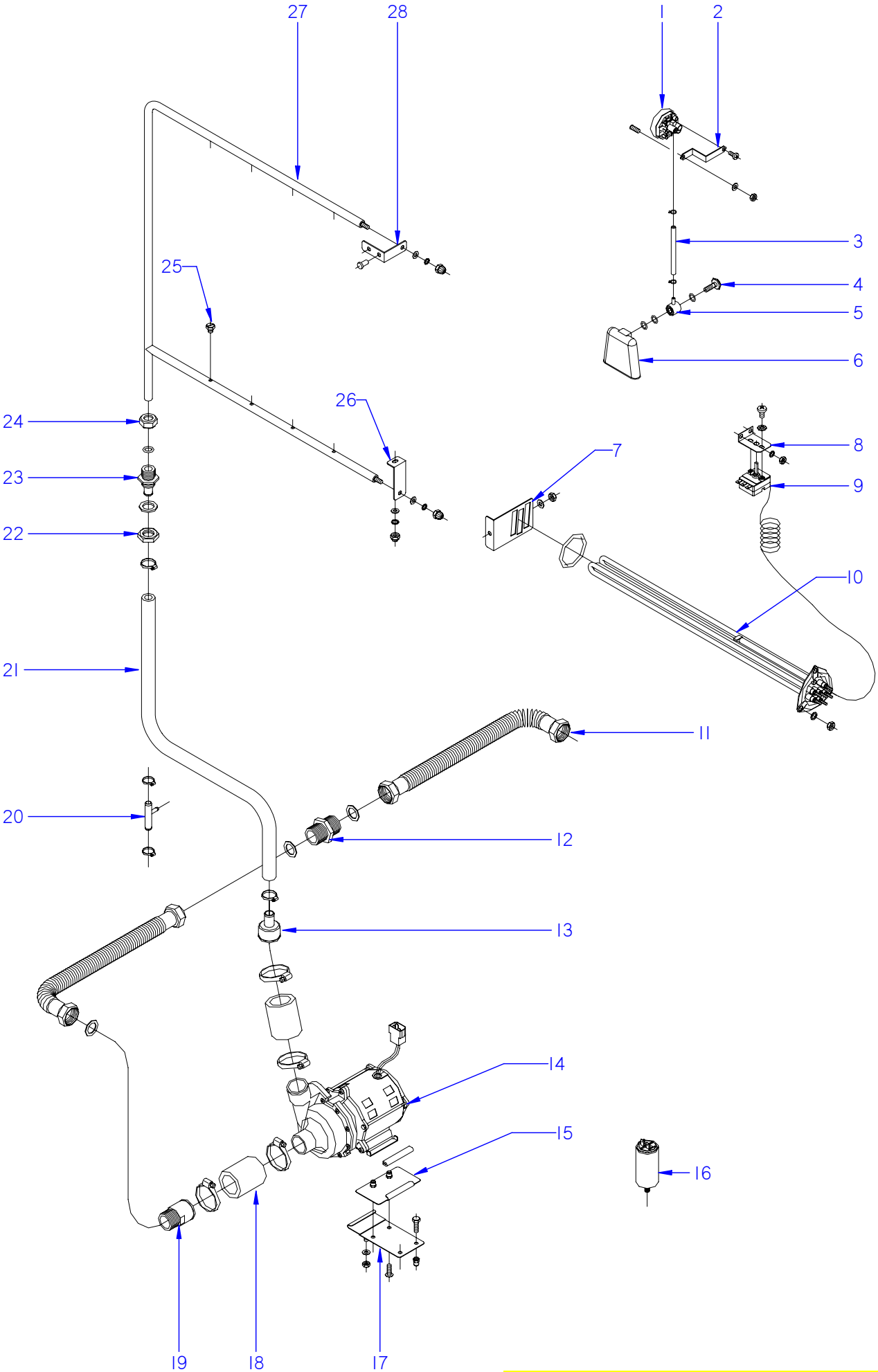

ITEM MARCADO EN COLOR = REPUESTO RECOMENDADO
COLOURED ITEM = RECOMMENDED SPARE PART

N plano	Firma	Fecha	Aparato	SISTEMA DE ACLARADO	Lamina	
C-2127		2008-10	LAVAVAJILLAS COMPACTOS ECO		8	Fagor Industrial S.Coop. FAGOR Oñate

MOD.	LAVAVAJILLAS COMPACTOS COMPACT DISHWASHERS	ZONA	SISTEMA DE ACLARADO / RINSE SYSTEM	PLANO	C-2127

ITEM	CODIGO	DENOMINACION	TEXTO	ECO-160	ECO-200						NOTAS
1	Z273006000	PRESOSTATO SIMPLE	SIMPLE PRESSURE SWITCH	1	1						
2	Z602923000	SOPORTE PRESOSTATO	PRESSURE SWITCH SUPPORT	1	1						
	Q082032000	TORNILLO ALOMADO BZ-3,5X9,5	CURVED SCREW BZ-3.5x9.5	1	1						
	Q232040000	ARANDELA A6	WASHER A6	1	1						
	Q162040000	TUERCA EXAGONAL M6	HEXAGONAL NUT M6	1	1						
3	3702400000	TUBO GOMA NEGRO D 8*4	BLACK RUBBER PIPE Ø 8*4	1	1						
	P102154000	BRIDA ELASTICA TUBO	ELASTIC PIPE FLANGE	2	2						
4	Z203013000	TORNILLO PRESOSTATO	PRESSURE SWITCH BOLT	1	1						
	Q307003000	JUNTA TORICA 16.01X10.77X2.62	O-RING 16.01X10.77X2.62	3	3						
5	Z203012000	EMPALME PRESOSTATO	PRESSURE SWITCH CONNEX	1	1						
6	Z203011000	CAMARA PRESOSTATO	PRESSURE SWITCH	1	1						
7	Z273602000	SUJECION RESISTENCIA	RESISTOR FASTENING	1	1						
	Q232040000	ARANDELA A6	WASHER A6	1	1						
	Q162040000	TUERCA EXAGONAL M6	HEXAGONAL NUT M6	1	1						
	Q307044000	JUNTA TORICA Ø 67.18x56.52x5.3	O-RING Ø 67.18x56.52x5.3	1	1						
8	Z850111000	SOPORTE TERMOSTATO	THERMOSTAT SUPPORT	1	1						
	Q232040000	ARANDELA A6	WASHER A6	2	2						
	Q162040000	TUERCA EXAGONAL M6	HEXAGONAL NUT M6	2	2						
	Q152024000	TORNILLO AVELLANADO M4X8 A304	COUNTERSUNK BOLT M4X8 A30	2	2						
9	Z203014000	TERMOSTATO CALDERIN	WASH DRUM THERMOSTAT	2	2						
10	Z121741000	RESISTENCIA 9600 230V.	RESISTOR 9600 230V	1	1						
	Q221305000	TUERCA EX.AUTO M4 ZINCADA	EX.AUTO NUT M4 ZINC-COATED	6	6						
11	Z951101000	TUBO CORRUGADO	CORRUGATED PIPE	2	2						
12	Z162306000	MANGUITO DOBLE ROSCA LATON 1	DOUBLE HOSE BRASS THREAD	1	1						
	Q306038000	ARANDELA JUNTA Ø 31X21X1.5	JOINT WASHER Ø 31X21X1.5	3	3						
13	Z162312000	REDUCCION	REDUCTION	1	1						
14	Z401001000	BOMBA LAVADO	WASH PUMP	1	1						
	Z281112000	PROTECTOR MOTOBOMBA	MOTOR PUMP GUARD	1	1						
	3701700000	PERFIL GOMA U 9*4 (2METROS)	RUBBER PROFILE U 9*4 (2 METR	2	2						
15	Z162313000	AMARRE MOTOBOMBA COMPL.	COMPL. MOTOR PUMP FASTENI	1	1						
16	V817100000	CONDENSADOR 6 M.F.	CONDENSER 6 M.F.	1	1						

MOD.	LAVAVAJILLAS COMPACTOS COMPACT DISHWASHERS	ZONA	SISTEMA DE ACLARADO / RINSE SYSTEM	PLANO	C-2127

ITEM	CODIGO	DENOMINACION	TEXTO	ECO-160	ECO-200						NOTAS
17	Z162315000	SOPORTE MOTOBOMBA COMPL.	COMPL. MOTOR PUMP SUPPOR	1	1						
	Q152004000	TORNILLO APLASTADO M5x13 A304	FLAT HEADED BOLT M5x13 A304	2	2						
	Q012042000	TORNILLO EXAGONAL M6X15	HEXAGONAL BOLT M6x15	2	2						
	Q162040000	TUERCA EXAGONAL M6	HEXAGONAL NUT M6	2	2						
	Q262030000	ARANDELA GROW. A5 A.304	WASHER GROW. A5 A.304	2	2						
	Q232040000	ARANDELA A6	WASHER A6	2	2						
18	Z162301000	CONDUCTO ASPIRAC. IMPULSION	EXTRACTOR PIPE. IMPULSE	2	2						
	Q881307000	ABRAZADERA 40/60	CLAMP 40/60	4	4						
19	Z701102000	MANGUITO	HOSE	1	1						
20	Z601157000	TOMA PRESION	PRESSURE INTAKE	1	1						
	Q881336000	ABRAZADERA 16/27	CLAMP 16/27	2	2						
21	3715300000	TUBO GOMA NEGRA Ø 14*24	BLACK RUBBER PIPE 14*24	1	1						
	Q881336000	ABRAZADERA 16*27	CLAMP 16*27	2	2						
22	Q223023000	TUERCA EXAGONAL 5-8 LATON	HEX NUT 5-8 BRASS	1	1						
23	Z281901000	PASAMUROS ACLARADO	RINSE BUSHING	1	1						
	Q307032000	JUNTA Ø32X21X3	JOINT Ø32X21X3	1	1						
24	Q223108000	TUERCA M.24X2.5	NUT M.24X2.5	1	1						
25	Z211903000	TOBERA ACLARADO	RINSE NOZZLE	8	8						
26	Z271912000	AMARRE INFERIOR ACLARADO	LOWER RINSE FASTENING	1	1						
	Q262030000	ARANDELA GROW. A5 A.304	WASHER GROW. A5 A.304	1	1						
	Q232040000	ARANDELA A6	WASHER A6	3	3						
	Q212031000	TUERCA SOMBRERETE M5	COWL NUT M5	1	1						
27	Z271902000	12Z2719020 ARBOL DE ACLARADO	12Z2719020 RINSE SHAFT	1	1						
	Q307063000	JUNTA TORICA 12,29X19,35X3,53	O-RING 12.29X19.35X3.53	1	1						
28	Z271911000	SOPORTE SUPERIOR ACLARADO	UPPER RINSE SUPPORT	1	1						
	Q412004000	REMACHE MONOBOLT Ø4.8	MONOBOLT RIVET Ø4.8	2	2						
	Q262030000	ARANDELA GROW. A5 A.304	WASHER GROW. A5 A.304	1	1						
	Q232040000	ARANDELA A6	WASHER A6	1	1						
	Q212031000	TUERCA SOMBRERETE M5	COWL NUT M5	1	1						

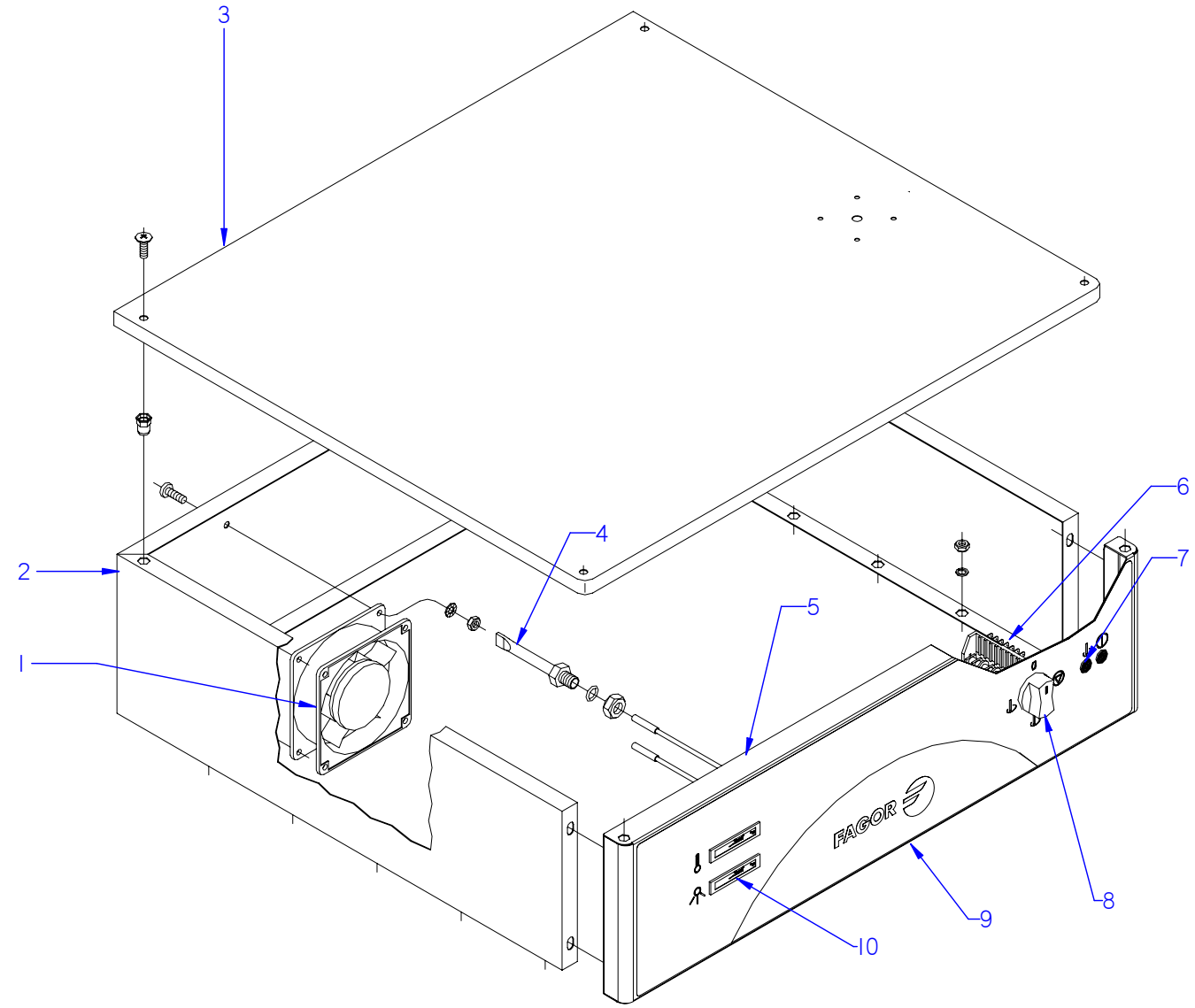

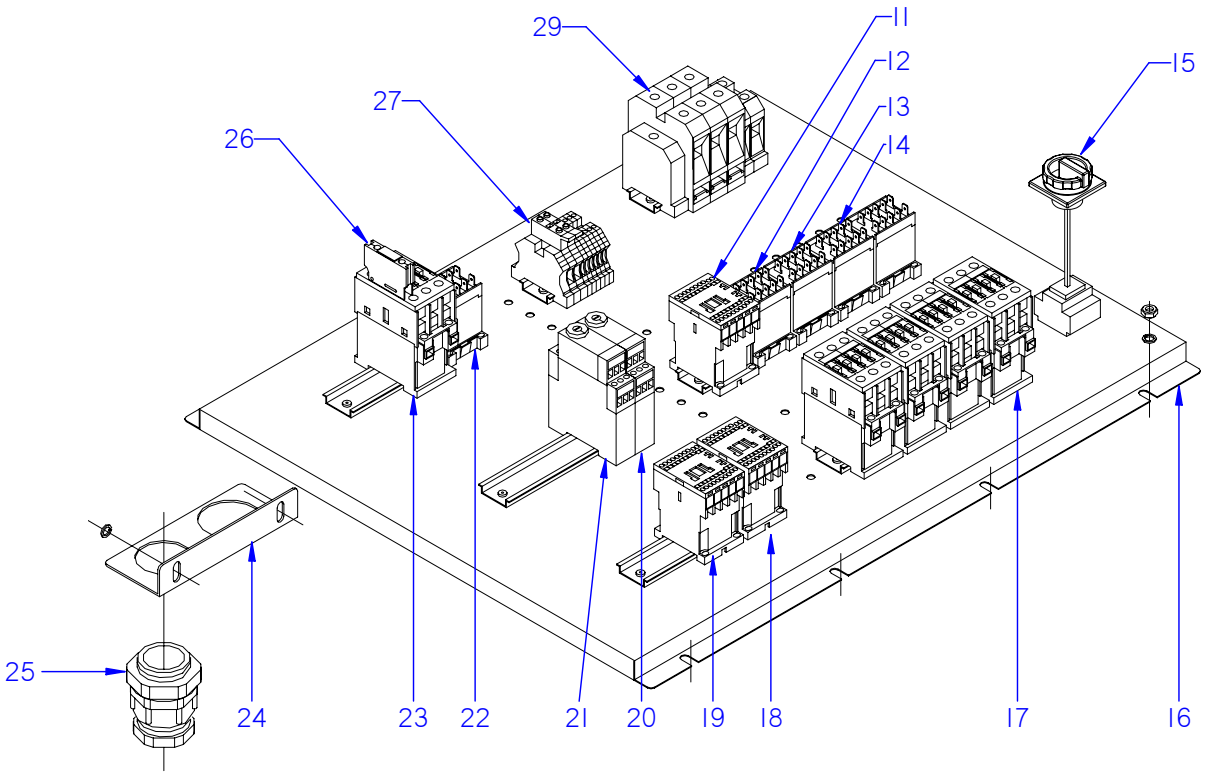

ITEM MARCADO EN COLOR = REPUESTO RECOMENDADO
COLOURED ITEM = RECOMMENDED SPARE PART

N plano	Firma	Fecha	Aparato		Lamina	
C-2128		2008-10	CONJUNTO FUNCIONAL ELECTRICO LAVAVAJILLAS COMPACTOS		9	Fagor Industrial S.Coop. FAGOR Oñate

MOD.	LAVAVAJILLAS COMPACTOS COMPACT DISHWASHERS	ZONA	CONJUNTO FUNCIONAL ELECTRICO FUNCTIONAL ELECTRIC UNIT	PLANO	C-2128

ITEM	CODIGO	DENOMINACION	TEXTO	FI-160	FI-200	ECO-160	ECO-200				NOTAS
1	Z103066000	VENTILADOR 230V.50-60HZ	FAN 230V.50-60HZ	1	1	1	1				
2	Z313043000	CUBIERTA CUADRO ELECTRICO	ELECTRIC PANEL COVER	1	1	1	1				ELIMINADO 01.12.09
2	Z313089000	CUBIERTA CUADRO ELECTRICO	ELECTRIC PANEL COVER	1	1	1	1				INTRODUCIDO 01.12.09
3	Z313048000	TAPA CUADRO ELECTRICO	ELECTRIC PANEL COVER	1	1	1	1				ELIMINADO 01.12.09
3	Z313093000	TAPA CUADRO ELECTRICO	ELECTRIC PANEL COVER	1	1	1	1				INTRODUCIDO 01.12.09
	Q152017000	TORNILLO AMARRE M6X13 A304	FASTENING BOLT M6X13 A304	4	4	4	4				
4	Z263002000	VAINA INDICADOR COMPLETA	COMPLETE INDICATOR SHELL	1	1	1	1				
	Q307048000	JUNTA TORICA 9,128x16,18x3,53	O-RING 9.128x16.18x3.53	1	1	1	1				
	Q162070000	TUERCA EXAGONAL M12	HEXAGONAL NUT M12	1	1	1	1				
5	Z313085000	FRENTE CUADRO ELECTRICO	ELECTRIC PANEL FRONT	1	1	1	1				ELIMINADO 01.12.09
5	Z273075000	FRENTE CUADRO ELECTRICO	ELECTRIC PANEL FRONT	1	1	1	1				INTRODUCIDO 01.12.09
	Q041324000	TORN. AVELLANADO M4X25 H.ZINC.	HEXAGONAL COUNTERSUNK M4	2	2	2	2				
6	Z273005000	COMMUTADOR DE FUNCIONES	FUNCTIONS SWITCH	1	1	1	1				
	Z602906000	CASQUILLO	BUSHING	2	2	2	2				
7	Z313080000	PILOTO AMBAR Ø18	AMBAR PILOT LIGHT Ø18	2	2	2	2				
8	Z203069000	BOTON DE MANDO	CONTROL BUTTON	1	1	1	1				ELIMINADO 01.12.09
8	Z513024000	BOTON DE MANDO	CONTROL BUTTON	1	1	1	1				INTRODUCIDO 01.12.09
9	Z273064000	EMBELLECEDOR ADHESIVO FI-160	ADHESIVE TRIM FI-160	1	_	_	_				ELIMINADO 01.12.09
9	Z273077000	EMBELLECEDOR ADHESIVO FI-160	ADHESIVE TRIM FI-160	1	_	_	_				INTRODUCIDO 01.12.09
9	Z313078000	EMBELLECEDOR ADHESIVO FI-200	ADHESIVE TRIM FI-200	_	1	_	_				ELIMINADO 01.12.09
9	Z313079000	EMBELLECEDOR ADHESIVO FI-200	ADHESIVE TRIM FI-200	_	1	_	_				INTRODUCIDO 01.12.09
9	Z283023000	EMBELLECEDOR ADHES. ECO-160	ADHES. TRIM ECO-160	_	_	1	_				ELIMINADO 01.12.09
9	Z283026000	EMBELLECEDOR ADHES. ECO-160	ADHES. TRIM ECO-160	_	_	1	_				INTRODUCIDO 01.12.09
9	Z323021000	EMBELLECEDOR ADHES. ECO-200	ADHES. TRIM ECO-200	_	_	_	1				ELIMINADO 01.12.09
9	Z323022000	EMBELLECEDOR ADHES. ECO-200	ADHES. TRIM ECO-200	_	_	_	1				INTRODUCIDO 01.12.09
10	Z203072000	INDICADOR ANALOGICO RECT.	RECT. ANALOGUE DISPLAY	2	2	1	1				ELIMINADO 01.12.09
10	Z513023000	INDICADOR ANALOGICO	RECT. ANALOGUE DISPLAY	2	2	1	1				INTRODUCIDO 01.12.09
11	Z743009000	CONTACTOR SIRIUS 3RT10 16-2AP	SIRIUS 3RT10 16-2AP CONTACTO	1	1	_	1				
12	Z213007000	CONTACTOR (BOMBA LAVADO)	CONTACTOR (WASH PUMP)	1	1	1	1				
13	Z683087000	CONTACTOR 3TF20 01-3AL2 230	CONTACTOR 3TF20 01-3AL2 230	1	1	1	1				
14	Z213007000	CONTACTOR (AVANCE 1)	CONTACTOR (ADVANCE 1)	2	2	2	2				

MOD.	LAVAVAJILLAS COMPACTOS COMPACT DISHWASHERS	ZONA	CONJUNTO FUNCIONAL ELECTRICO FUNCTIONAL ELECTRIC UNIT	PLANO	C-2128

ITEM	CODIGO	DENOMINACION	TEXTO	FI-160	FI-200	ECO-160	ECO-200				NOTAS
15	P663014000	SECCIONADOR 3P.125A SIEMENS	SECTIONATOR 3P.125A SIEMENS	1	1	_	_				INTRODUCIDO 01.12.09
S/Nº	P663015000	BLOQUE 4º P. SECCIONAD. 125A S.	SECTION. 125A 4º POLO SIEMEN	1	1	_	_				INTRODUCIDO 01.12.09
15	P683039000	SECCIONADOR 4P.63A SIEMENS	SECTIONATOR 4P.63A SIEMENS	_	_	1	1				INTRODUCIDO 01.12.09
16	Z313040000	SOPORTE CUADRO ELECTRICO	ELECTRIC PANEL SUPPORT	1	1	1	1				
17	X183011000	CONTACTOR 3RT1024-1AN20 230	CONTACTOR 3RT1024-1AN20 230	4	4	4	4				
18	Z203050000	CONTAC. SIRIUS (EXTRAC-COND.)	CONTACT. SIRIUS (EXTRAC-CON	1	1	1	1				
19	Z203050000	CONTACTOR. SIRIUS (SECADO)	CONTACTOR. SIRIUS (DRYER)	1	1	1	1				
20	Z123022000	TEMPORIZA. SYRELEC TRU INICIO	TIMER . SYRELEC TRU START	1	1	1	1				
21	Z123022000	TEMPORI. SYRELEC TRU SECADO	TIMER . SYRELEC TRU DRYER	1	1	1	1				
22	Z213007000	CONTACTOR (PUERTA)	CONTACTOR (DOOR)	1	1	1	1				
23	X183011000	CONTACTOR (RESISTEC.SECADO)	CONTACTOR (DRYER RESIST.)	1	1	1	1				
24	Z312966000	SOPORTE PRENSAESTOPAS	STUFFING BOX SUPPORT	1	1	1	1				
25	R033002000	PRENSA ESTOPAS	STUFFING BOX	1	1	1	1				
26	Z103070000	BLOQ. AUX. 3RH1921-1CA10	AUX. BLOCK 3RH1921-1CA10	1	1	1	1				
27	R073005000	BORNAS PORTA FUSIBLES	FUSE HOLDER TERMINALS	2	2	2	2				
	P184011000	CARTUCHO FUSIBLE 4A	FUSE CARTRIDGE 4A	2	2	2	2				
	Z103029000	BORNE PAS WDU 2.5 10200-0	TERMINAL PAS WDU 2.5 10200-0	6	6	6	6				
	Z263303000	TOPE FINAL	END STOP	2	2	2	2				
28	R143011000	BORNA WDU-70/N REF.951219	TERMINAL WDU-70/N REF.951219	3	3	_	_				ELIMINADO 01.12.09
	R263003000	BORNA PASO 35MM	THROUGH TERMINAL 35MM	_	_	3	3				ELIMINADO 01.12.09
	P453026000	BORNE TIER 10 WPE-10103.O	TERMINAL TIER 10 WPE-10103.O	1	1	1	1				
	R673010000	BORNA PASO AZUL 35MM	THROUGH TERMINAL BLUE 35MM	1	1	1	1				
	Z103035000	BORNA TIERRA 35MM	EARTH TERMINAL 35MM	1	1	1	1				
	Z683068000	SEÑALIZ.DEK-6WEIDMULLER	SIGNS DEK-6WEIDMULLER	1	1	1	1				
	Z683096000	TOPE FINAL WEW35 10590.0	END STOP WEW35 10590.0	1	1	1	1				
	Z513083000	BORNE DISTRIBUIDOR 70 MM2	DISTRIBUI. 70 MM2 TERMINAL	1	1	_	_				INTRODUCIDO 01.12.09
	Z273083000	BORNE DISTRIBUIDOR 35 MM2	DISTRIBUI. 35 MM2 TERMINAL	_	_	3	3				INTRODUCIDO 01.12.09

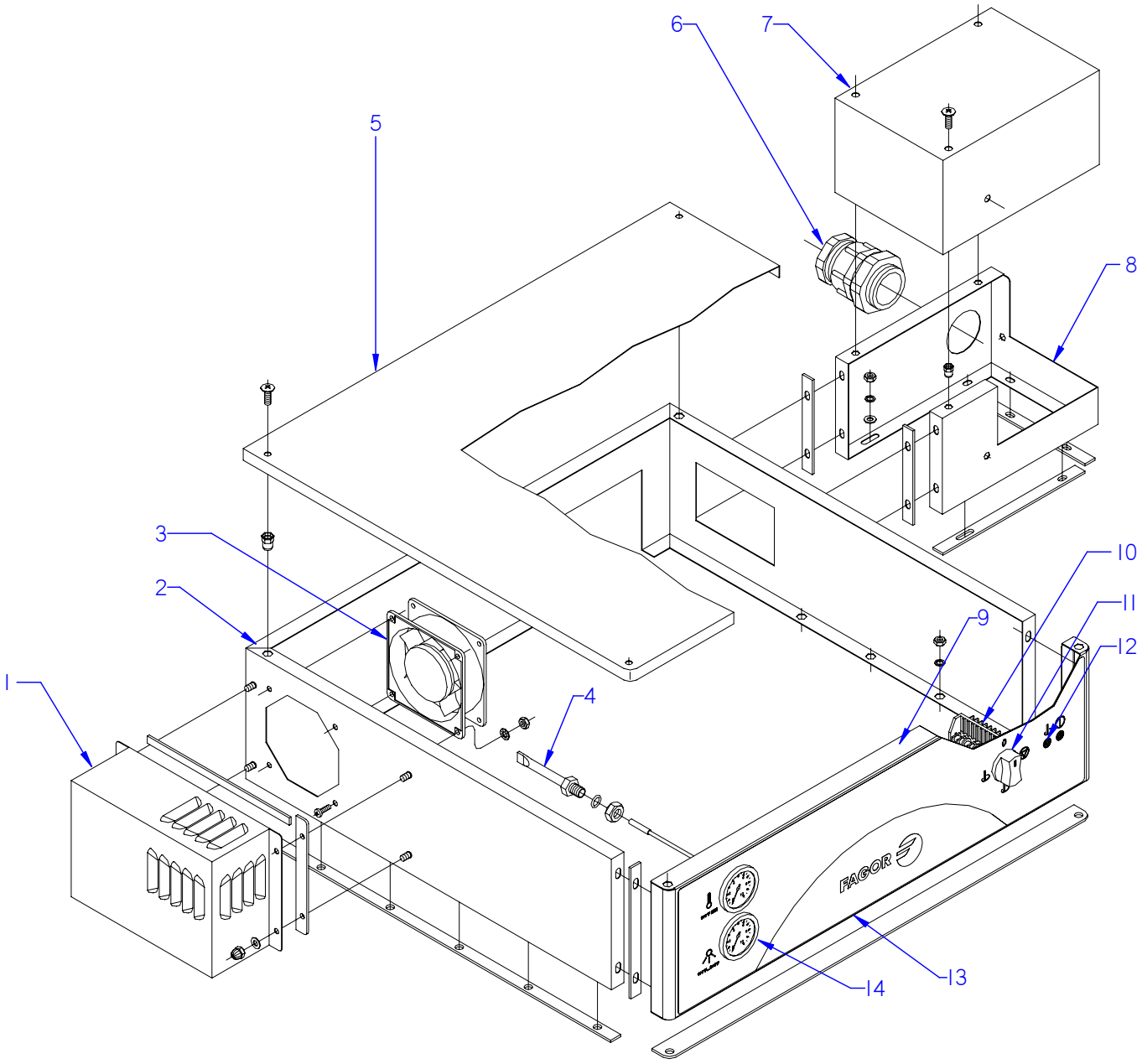

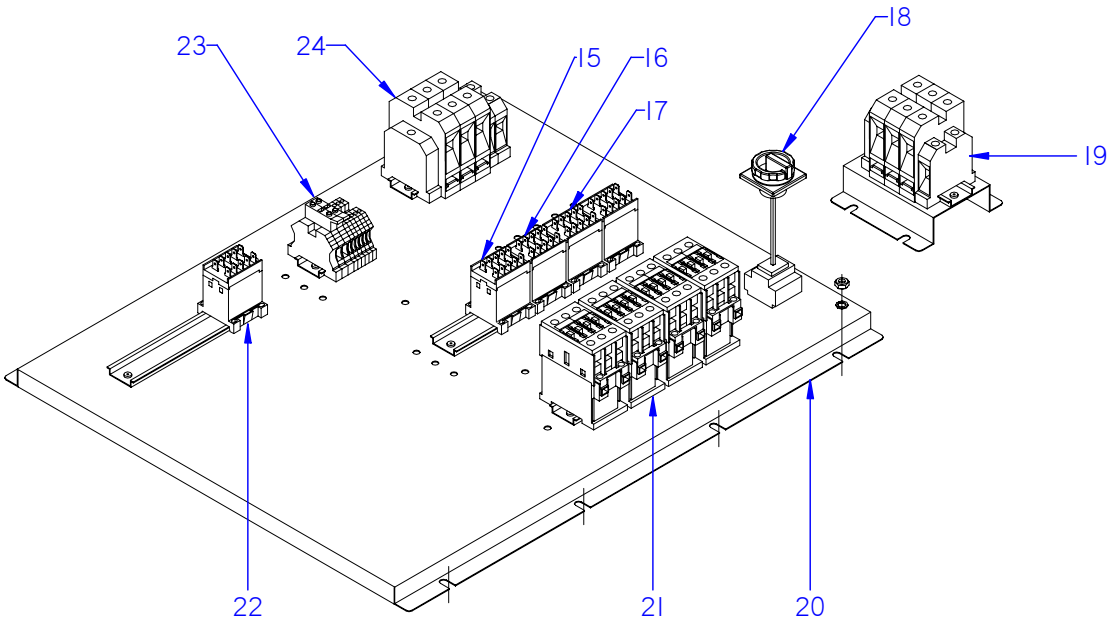

ITEM MARCADO EN COLOR = REPUESTO RECOMENDADO
COLOURED ITEM = RECOMMENDED SPARE PART

N plano	Firma	Fecha	Aparato		Lamina	
C-2129		2008-10	CONJUNTO FUNCIONAL ELECTRICO LAVAVAJILLAS COMPACTOS W		10	Fagor Industrial S.Coop. FAGOR Oñate

MOD.	LAVAVAJILLAS COMPACTOS COMPACT DISHWASHERS	ZONA	CONJUNTO FUNCIONAL ELECTRICO FUNCTIONAL ELECTRIC UNIT	PLANO	C-2129

ITEM	CODIGO	DENOMINACION	TEXTO	FI-200 W							NOTAS
1	Z273045000	TAPA VENTILADOR W	FAN COVER W	1							
	Z273051000	JUNTA LAT. TAPA VENTILADOR W	FAN COVER SIDE JOINT W	2							
	Z273052000	JUNTA SUP. TAPA VENTILADOR W	FAN COVER UPPER JOINT W	1							
	Q232040000	ARANDELA A6	WASHER A6	4							
	Q212040000	TUERCA SOMBRERETE M6	COWL NUT M6	4							
2	Z273041000	CUBIERTA CUADRO ELECTRIC. W	ELECTRIC PANEL COVER W	1							ELIMINADO 01.12.09
2	Z273025000	CUBIERTA CUADRO ELECTRIC. W	ELECTRIC PANEL COVER W	1							INTRODUCIDO 01.12.09
	Z273049000	JUNTA FRONTAL CUADRO ELE. W	ELEC PANEL FRONT JOINT W	2							
	Z273047000	JUNTA LATERAL CUADRO ELE. W	ELEC PANEL SIDE JOINT W	2							
3	Z103066000	VENTILADOR 230V.50-60HZ	FAN 230V.50-60HZ	1							
4	Z263002000	VAINA INDICADOR COMPLETA	COMPLETE INDICATOR SHELL	1							
	Q307048000	JUNTA TORICA 9,128x16,18x3,53	O-RING 9.128x16.18x3.53	1							
	Q162070000	TUERCA EXAGONAL M12	HEXAGONAL NUT M12	1							
5	Z313048000	TAPA CUADRO ELECTRICO	ELECTRIC PANEL COVER	1							ELIMINADO 01.12.09
5	Z313093000	TAPA CUADRO ELECTRICO	ELECTRIC PANEL COVER	1							INTRODUCIDO 01.12.09
	Q152017000	TORNILLO AMARRE M6X13 A304	FASTENING BOLT M6X13 A304	4							
6	Z312941000	PRENSA ESTOPAS PG-42	STUFFING BOX PG-42	1							
7	Z273043000	TAPA TERMINAL BOX	BOX TERMINAL COVER	1							
	Q221343000	REMACHE EXAGONAL M6	HEXAGONAL RIVET M6	5							
8	Z273042000	TERMINAL BOX	BOX TERMINAL	1							
	Z273053000	JUNTA W LATERAL TERMINAL BOX	BOX TERMINAL SIDE JOINT W	2							
	Z273054000	JUNTA W LAT INF. TERMINAL BOX	BOX TERMINAL LOW. SIDE JOINT	1							
	Z273055000	JUNTA W FRONT INF. TERMINAL B	BOX TERMINAL B LOW. FRONT J	2							
9	Z273067000	FRENTE CUADRO ELECTRICO W	ELECTRIC PANEL FRONT W	1							ELIMINADO 01.12.09
9	Z273068000	FRENTE CUADRO ELECTRICO W	ELECTRIC PANEL FRONT W	1							INTRODUCIDO 01.12.09
	Z273050000	JUNTA W FRENTE CUADRO	PANEL FRONT JOINT W	1							
	Z273048000	JUNTA W TRAS CUADRO ELEC	ELECT. PANEL REAR JOINT W	1							
10	Z273005000	COMMUTADOR DE FUNCIONES	FUNCTIONS SWITCH	1							
	Z602906000	CASQUILLO	BUSHING	2							
11	Z203069000	BOTON DE MANDO	CONTROL BUTTON	1							ELIMINADO 01.12.09
11	Z513024000	BOTON DE MANDO	CONTROL BUTTON	1							INTRODUCIDO 01.12.09

MOD.	LAVAVAJILLAS COMPACTOS COMPACT DISHWASHERS	ZONA	CONJUNTO FUNCIONAL ELECTRICO FUNCTIONAL ELECTRIC UNIT	PLANO	C-2129

ITEM	CODIGO	DENOMINACION	TEXTO	FI-200 W							NOTAS
12	Z313080000	PILOTO AMBAR Ø18	AMBAR PILOT LIGHT Ø18	2							
13	Z298401000	EMBELLECEDOR ADHES. FI-200 W	ADHES. TRIM FI-200 W	1							
13	Z273070000	EMBELLECEDOR ADHES. FI-200 W	ADHES. TRIM FI-200 W	1							ELIMINADO 01.12.09
14	Z273060000	TERMOMETRO W NSF	THERMOMETER W NSF	2							INTRODUCIDO 01.12.09
15	Z213007000	CONTACTOR (BOMBA LAVADO)	CONTACTOR (WASH PUMP)	1							
16	Z683087000	CONTACTOR 3TF20 01-3AL2 230	CONTACTOR 3TF20 01-3AL2 230	1							
17	Z213007000	CONTACTOR (AVANCE 1)	CONTACTOR (ADVANCE 1)	2							
18	P663014000	SECCIONADOR 3P.125A SIEMENS	SECTIONATOR 3P.125A SIEMEN	1							INTRODUCIDO 01.12.09
S/Nº	P663015000	BLOQUE 4º P. SECCIONAD. 125A S.	SECTION. 125A 4º POLO SIEMEN	1							INTRODUCIDO 01.12.09
19	R143011000	BORNA WDU-70/N REF.951219	TERMINAL WDU-70/N REF.95121	3							
	Z103035000	BORNA TIERRA 35MM	EARTH TERMINAL 35MM	1							
	Z683096000	TOPE FINAL WEW35 10590.0	END STOP WEW35 10590.0	1							
	R663055000	GUIA CONTACTOR L-120	CONTACTOR GUIDE L-120	1							
	Z273044000	SOPORTE GUIA CONTACTOR	CONTACTOR GUIDE SUPPORT	1							
	Q411304000	REMACHE AVIBULB Ø4,8	AVIBULB RIVET Ø4.8	2							
20	Z313040000	SOPORTE CUADRO ELECTRICO	ELECTRIC PANEL SUPPORT	1							
21	X183011000	CONTACTOR 3RT1024-1AN20 230	CONTACTOR 3RT1024-1AN20 23	4							
22	Z213007000	CONTACTOR (PUERTA)	CONTACTOR (DOOR)	1							
23	R073005000	BORNAS PORTA FUSIBLES	FUSE HOLDER TERMINALS	2							
	Z273059000	FUSIBLE 5 A UL	FUSE 5 A UL	2							
	Z103029000	BORNE PAS WDU 2.5 10200-0	TERMINAL PAS WDU 2.5 10200-0	6							
	Z263303000	TOPE FINAL	END STOP	2							
24	R143011000	BORNA WDU-70/N REF.951219	TERMINAL WDU-70/N REF.95121	3							ELIMINADO 01.12.09
	Z513083000	BORNE DISTRIBUIDOR 70 MM2	DISTRIBUI. 70 MM2 TERMINAL	1							INTRODUCIDO 01.12.09
	P453026000	BORNE TIER 10 WPE-10103.O	TERMINAL TIER 10 WPE-10103.O	1							
	Z683096000	TOPE FINAL WEW35 10590.0	END STOP WEW35 10590.0	1							

MOD.	LAVAVAJILLAS COMPACTOS COMPACT DISHWASHERS	ZONA	VARIOS / VARIOUS	PLANO	

ITEM	CODIGO	DENOMINACION	TEXTO	FI-160	FI-200	ECO-160	ECO-200	FI-200 W			NOTAS
	Z276111000	FOLLETO DE INSTRUCCIONES FI	INSTRUCTION LEAFLET FI	1	1	_	_	_			
	Z286110000	FOLLETO INSTRUCCIONES ECO	INSTRUCTION LEAFLET ECO	_	_	1	1	_			
	Z276112000	FOLLETO INSTRUCCION. FI-200W	INSTRUCTION LEAFLET FI-200W	_	_	_	_	1			
	Z273018000	ESQUEMA TEORICO ADHESIVO FI	THEOR. DIAGRAM LABEL FI	1	1	_	_	_			PLANO HC-17294
	Z283020000	ESQUEMA TEORICO ADHESI. ECO	THEORETICAL DIAGRAM LABEL	_	_	1	1	_			PLANO HC-17304
	Z273058000	ESQUEMA TEORICO ADHESIVO W	THEOR. DIAGRAM LABEL W		_	_	_	1			PLANO HC-17756
	Z313070000	LEYENDA ESQUEMAS COMPACTO	COMPACT DIAGRAM LEGEND	1	1	1	1	1			PLANO HC-17259
	Z273034000	ESQUEMA MONTAJE COMPACTO	COMPACT ASSEMBLY DIAGRAM	1	1	1	1	1			PLANO HD-16280
	Z275080000	MONTAJE RODAMIEN. ARRASTRE	DRIVE BEARING ASSEMBLY	1	1	1	1	1			PLANO HC-17217
	Z273030000	INSTALACION ELECTRICA BASE	ELECTRIC INSTALLATION BASE	1	1	1	1	_			
	Z273056000	INSTALACION ELECTRICA W BASE	ELECTRIC INSTALLATION W BAS		_	_	_	1			
	Z273031000	INSTALAC. ELECTRICA CALDERÍN	BOILER ELECTRIC INSTALLATIO	1	1	_	_	_			
	Z273057000	INSTAL. ELECTRICA W CALDERÍN	BOILER W ELECTRIC INSTALLAT		_	_	_	1			
	Z273032000	INSTALACION VELOCIDAD II	SPEED INSTALLATION II	_	1	_	1	1			
	Z323001000	CABLEADO ECO-280	WIRING ECO-280	_	_	1	1	_			
	Z718416000	CABLEADO ELECTROVALVULA W	SOLENOID VALVE WIRING W		_	_	_	1			
	Z273016000	MICRO FIN DE CARRERA	LIMIT SWITCH MICRO	1	1	1	1	1			
	Z273085000	CABLEADO SECCIONADOR 125A	SECTIONATOR 125A WIRING	1	1	_	_	1			INTRODUCIDO 01.12.09
	Z273084000	CABLEADO SECCIONADOR 63A	SECTIONATOR 63A WIRING	_	_	1	1	_			INTRODUCIDO 01.12.09

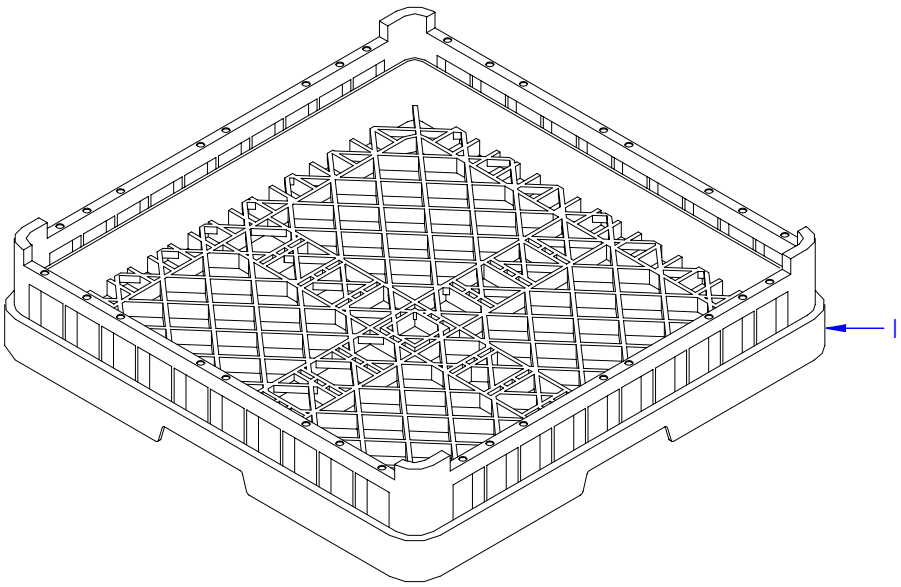

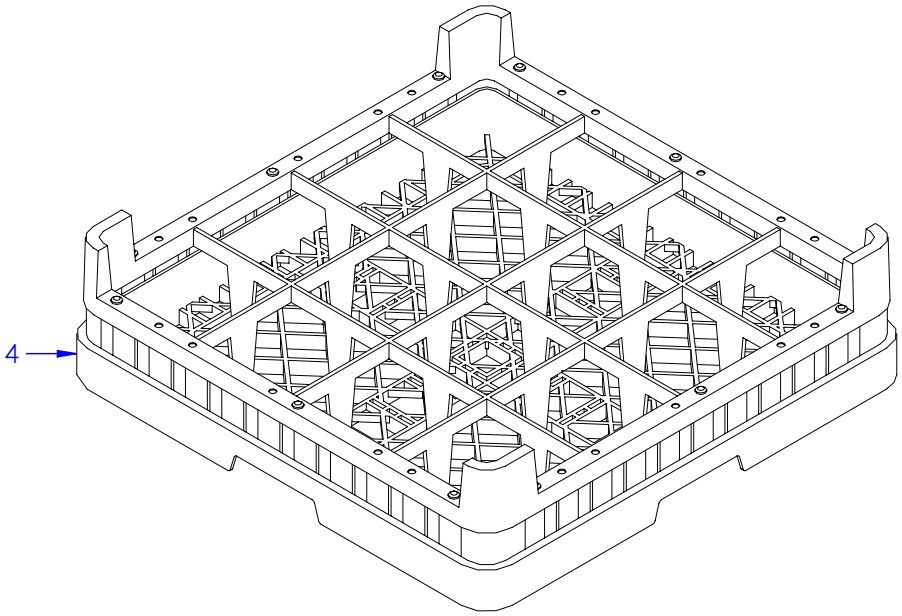

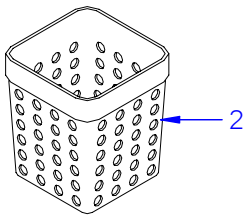

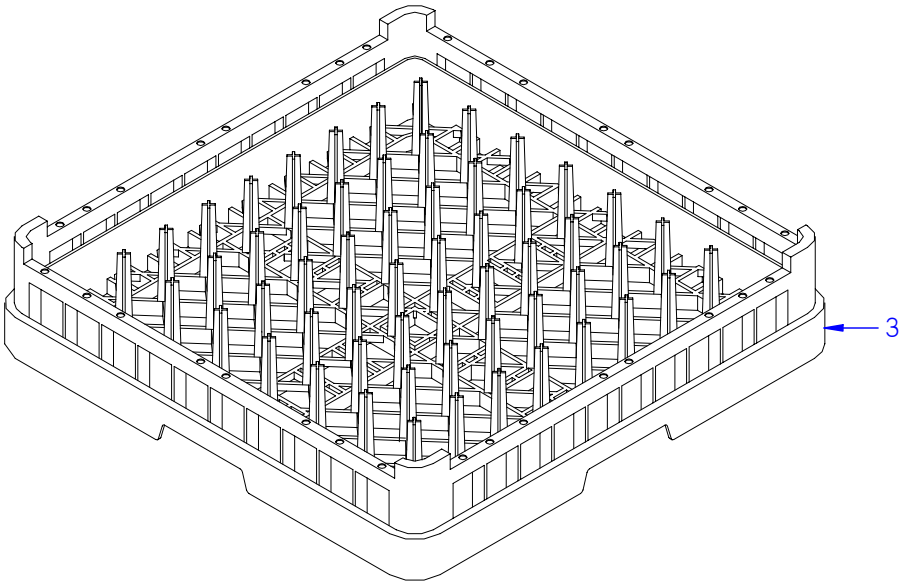

ITEM MARCADO EN COLOR = REPUESTO RECOMENDADO
COLOURED ITEM = RECOMMENDED SPARE PART

N plano	Firma	Fecha	Aparato		Lamina	
C-2130		2008-10	CESTILLOS LAVAVAJILLAS COMPACTOS		11	Fagor Industrial S.Coop. Oñate

MOD.	LAVAVAJILLAS COMPACTOS COMPACT DISHWASHERS	ZONA	CESTILLOS / BASKETS	PLANO	C-2130

ITEM	CODIGO	DENOMINACION	TEXTO	FI-160 ECO-160	FI-200 ECO-200	FI-200W						NOTAS
1	Z655301000	CESTILLO BASE CT-10	BASE BASKET CT-10	2	2	_						
2	Z655314000	CESTILLO CUBIERTOS	CUTLERY BASKET	10	10	_						ELIMINA. 01.12.09
2	Z275315000	CESTILLO CUBIERTOS	CUTLERY BASKET	1	1	_						INTROD. 01.12.09
3	Z655302000	CESTILLO PLATOS CP-16-18	PLATE BASKET CP-16-18	2	2	1						
4	Z655316000	CESTILLO CV-16-105	BASKET CV-16-105	1	1	1						

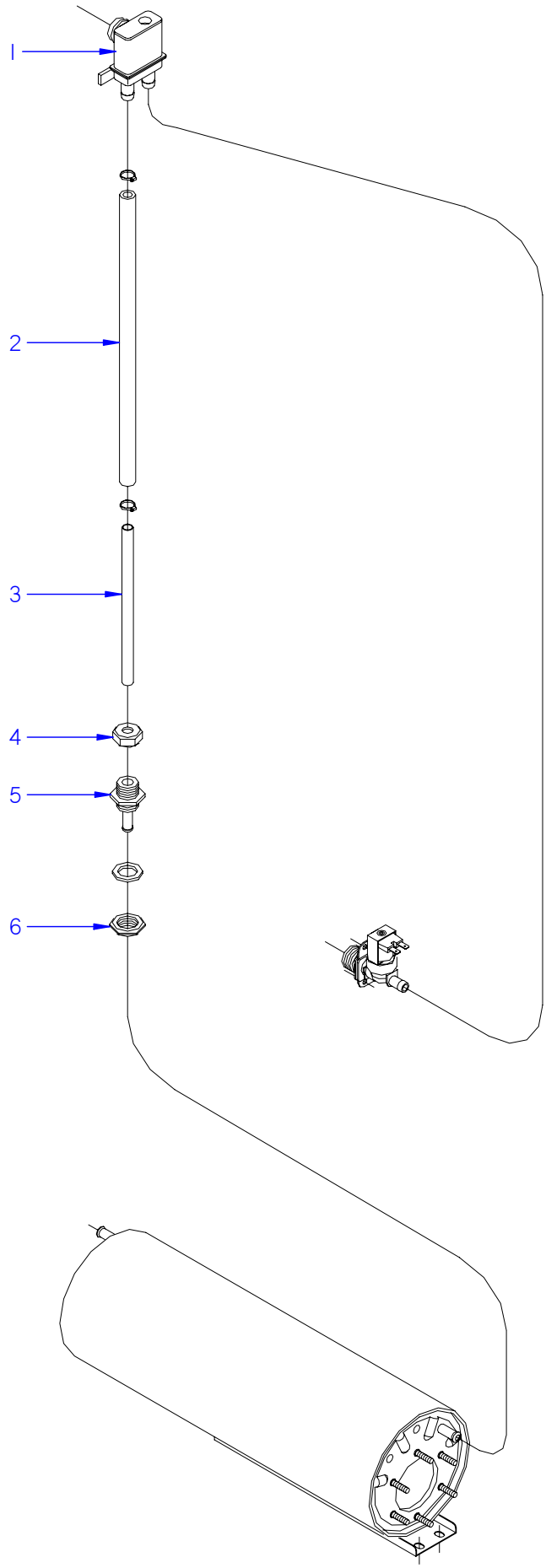

ITEM MARCADO EN COLOR = REPUESTO RECOMENDADO
COLOURED ITEM = RECOMMENDED SPARE PART

N plano	Firma	Fecha	Aparato		Lamina	
C-2131		2008-10	VALVULA ANTIRRETORNO LAVAVAJILLAS COMPACTOS A.R.		12	Fagor Industrial S.Coop. Oñate

MOD.	LAVAVAJILLAS COMPACTOS COMPACT DISHWASHERS		ZONA	VALVULA ANTIRRETORNO / NON-RETURN VALVE							C-2131
ITEM	CODIGO	DENOMINACION	TEXTO	FI-160 A.R.	FI-200 A.R.						
1	Z231106000	VALVULA ANTIRRETORNO	NON-RETURN VALVE	1	1						
	Z271111000	SOPORTE VALVULA A.R.COMPLETO	COMPLETE VALVE SUPPORT A.R	1	1						
	Z271110000	SOPORTE INFERIOR A.R.	LOWER SUPPORT A.R.	1	1						
	Z271114000	CUBIERTA A.R.	COVER A.R.	1	1						
2	3676900000	TUBO GOMA NEGRA D 17*10	BLACK RUBBER PIPE 17*10	2	2						
	Q881302000	ABRAZADERA 12-20	CLAMP 12-20	4	4						
3	Z711114000	TUBO EMPALME	CONNECTION PIPE	2	2						
4	Q223107000	TUERCA M.20x2.5	NUT M.20X2.5	2	2						
5	Z711904000	PASAMUROS ACLARADO	RINSE BUSHING	2	2						
	Q307032000	JUNTA 32X21X3	JOINT 32X21X3	2	2						
6	Q223023000	TUERCA EXAGONAL 5-8 LATON	HEX NUT 5-8 BRASS	2	2						

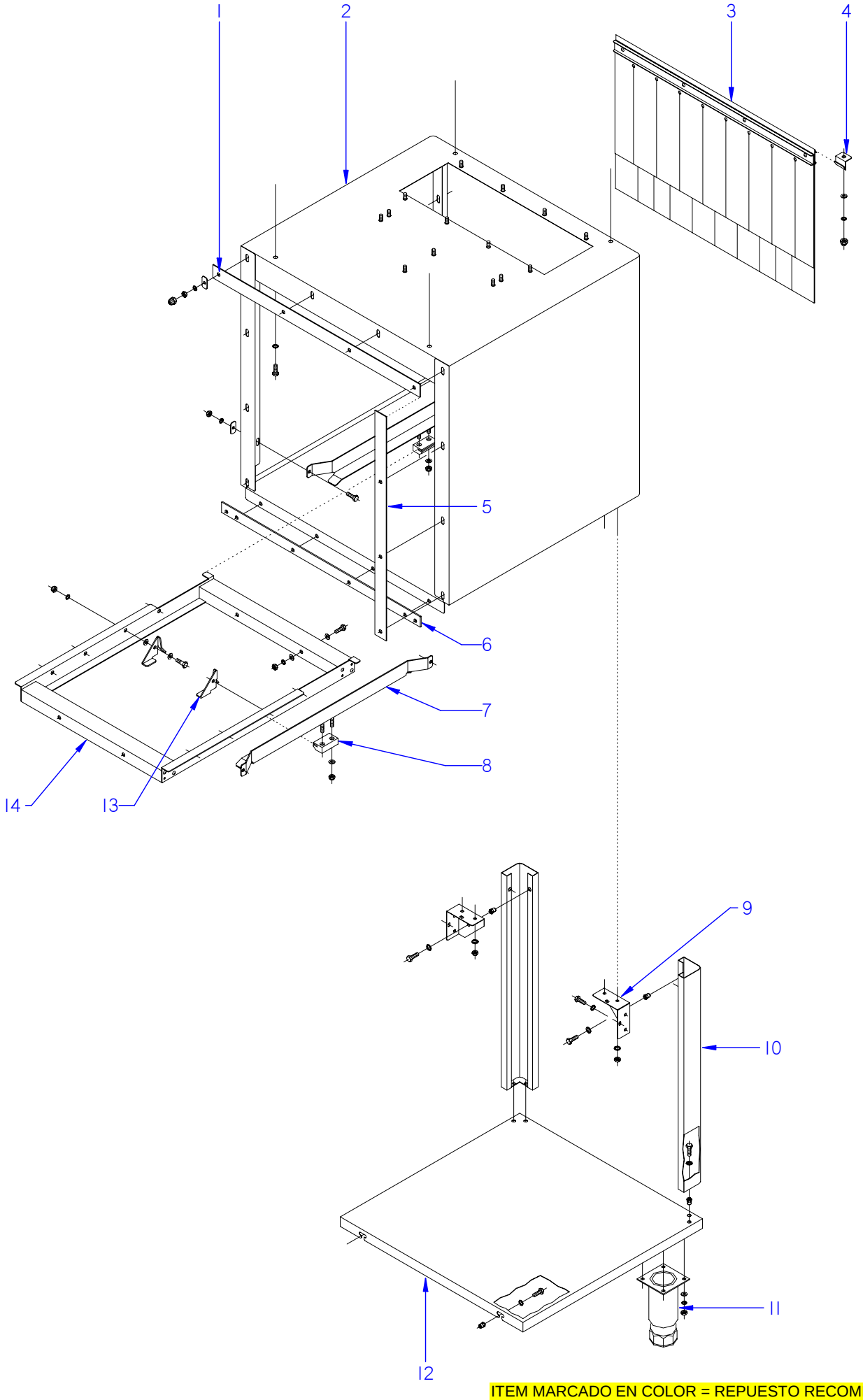

ITEM MARCADO EN COLOR = REPUESTO RECOMENDADO
COLOURED ITEM = RECOMMENDED SPARE PART

N plano	Firma	Fecha	Aparato		Lamina	
C-2132		2008-10	TUNEL DE SECADO	LAVAVAJILLAS COMPACTOS	13	Fagor Industrial S.Coop. FAGOR Onate

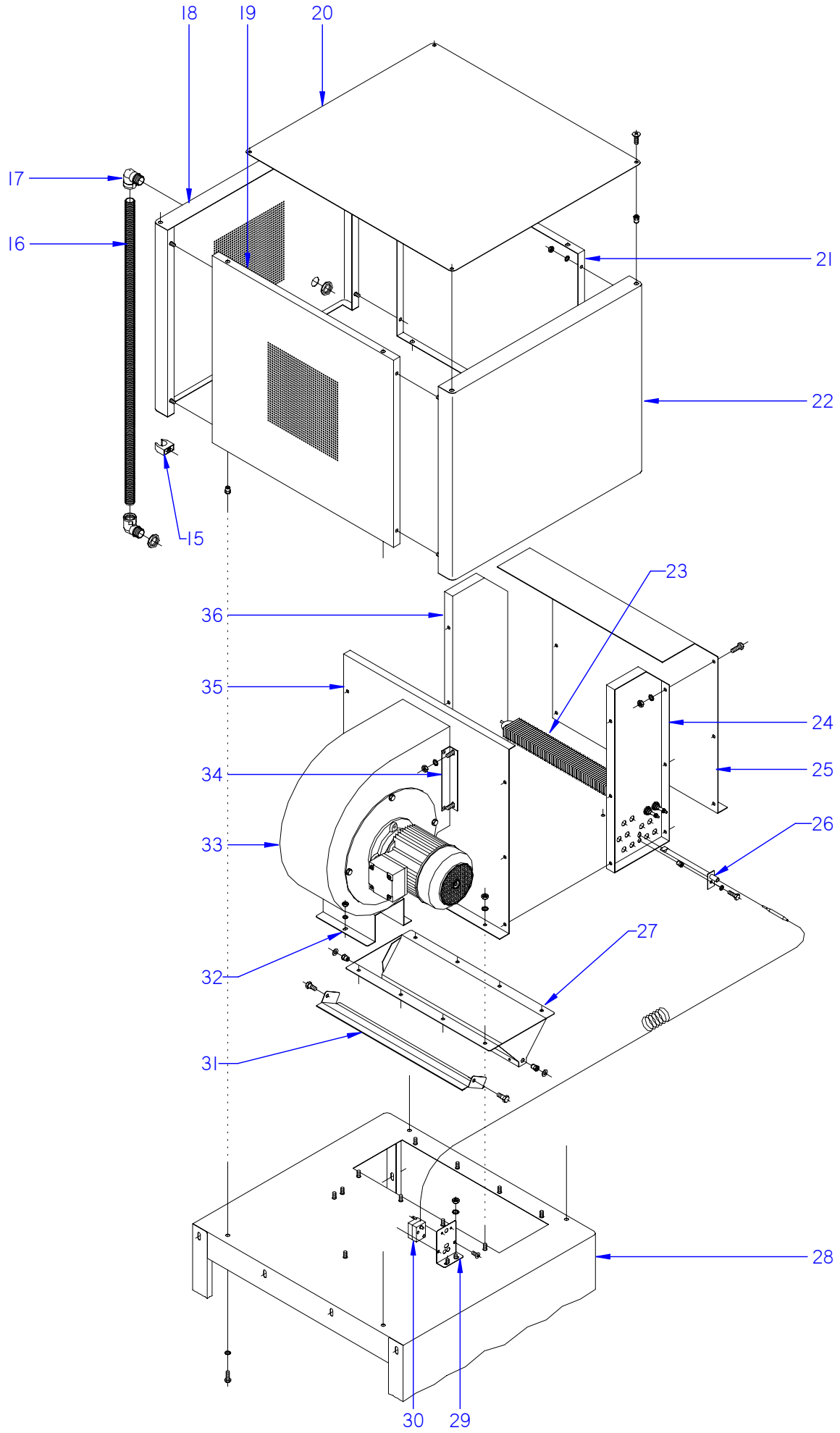

ITEM MARCADO EN COLOR = REPUESTO RECOMENDADO
COLOURED ITEM = RECOMMENDED SPARE PART

N plano	Firma	Fecha	Aparato		Lamina	
C-2133		2008-10	SECADO LAVAVAJILLAS COMPACTOS		14	Fagor Industrial S.Coop. Oñate

MOD.	LAVAVAJILLAS COMPACTOS COMPACT DISHWASHERS	ZONA	TUNEL DE SECADO / DRYING TUNNEL	PLANO	C-2132 C-2133

ITEM	CODIGO	DENOMINACION	TEXTO	TUNEL DE SECADO							NOTAS
1	Z276206000	JUNTA SUPERIOR COMPACTO**	COMPACT UPPER JOINT**	1							
	Q302022000	ARANDELA 16X6X1.2 A.304	WASHER 16X6X1.2 A.304	4							
	Q262040000	ARANDELA GROW. A6 A304	WASHER GROW. A6 A304	4							
	Q162040000	TUERCA EXAGONAL M6	HEXAGONAL NUT M6	12							
2	Z276301000	TUNEL SECADO SOLDADO	WELDED DRYER TUNNEL	1							
3	Z276429000	CORTINA INTERIOR COMPLETA	COMPLETE INTERIOR CURTAIN	1							
4	Z270326000	SUJECION CORTINA	CURTAIN FASTENING	2							
	Q262030000	ARANDELA GROW. A5 A.304	WASHER GROW. A5 A.304	2							
	Q232040000	ARANDELA A6	WASHER A6	2							
	Q212031000	TUERCA SOMBRERETE M5	COWL NUT M5	2							
5	Z276208000	JUNTA LATERAL COMPACTO**	COMPACT SIDE JOINT**	2							
	Q302022000	ARANDELA 16X6X1.2 A.304	WASHER 16X6X1.2 A.304	8							
	Q262040000	ARANDELA GROW. A6 A304	WASHER GROW. A6 A304	8							
	Q162040000	TUERCA EXAGONAL M6	HEXAGONAL NUT M6	8							
6	Z276207000	JUNTA INFERIOR COMPACTO**	COMPACT LOWER JOINT **	1							
	Q302022000	ARANDELA 16X6X1.2 A.304	WASHER 16X6X1.2 A.304	4							
	Q262040000	ARANDELA GROW. A6 A304	WASHER GROW. A6 A304	4							
	Q162040000	TUERCA EXAGONAL M6	HEXAGONAL NUT M6	4							
7	Z276309000	GUIA DE SECADO COMPLETO	COMPLETE DRYER GUIDE	2							
8	Z275075000	DESLIZAMIENTO GUIAS	GUIDE SLIDE	4							
	Q232040000	ARANDELA A6	WASHER A6	8							
	Q222012000	TUERCA AUTOBLOCANTE M6	SELF-LOCKING NUT M6	8							
	Q012042000	TORNILLO EXAGONAL M6X15 A304	HEXAGONAL BOLT M6x15 A304	4							
	Q262040000	ARANDELA GROW. A6 A304	WASHER GROW. A6 A304	4							
	Z310341000	ARANDELA RECTANGULAR	RECTANGULAR WASHER	4							
	Q162040000	TUERCA EXAGONAL M6	HEXAGONAL NUT M6	4							
9	Z276354000	AMARRE PATA	LEG FASTENING	2							
	Q262040000	ARANDELA GROW. A6 A304	WASHER GROW. A6 A304	4							
	Q162040000	TUERCA EXAGONAL M6	HEXAGONAL NUT M6	4							
10	Z276395000	PATA TUNEL SECADO COMPLETA	COMPLETE DRYER TUNNEL LEG	2							

MOD.	LAVAVAJILLAS COMPACTOS COMPACT DISHWASHERS		ZONA	TUNEL DE SECADO / DRYING TUNNEL						PLANO	C-2132 C-2133
ITEM	CODIGO	DENOMINACION	TEXTO	TUNEL DE SECADO							NOTAS
11	X260151000	PATA REGULABLE	ADJUSTABLE LEG	2							
	Q302022000	ARANDELA 16X6X1.2 A.304	WASHER 16X6X1.2 A.304	8							
	Q262040000	ARANDELA GROW. A6 A.304	WASHER GROW. A6 A.304	8							
	Q162040000	TUERCA EXAGONAL M6	HEXAGONAL NUT M6	8							
12	Z276398000	BANDEJA TUNEL SECADO COMPL.	COMPL. DRYER TUNNEL TRAY	1							
	Q221342000	REMACHE EXAGONAL M5	HEXAGONAL RIVET M5	8							
	Q242030000	ARANDELA ABANICO A5 A.304	FAN WASHER A5 A.304	8							
	Q012031000	TORNILLO EXAGONAL M5X10 A304	HEXAGONAL BOLT M5x10 A304	8							
13	Z275077000	UÑA ARRASTRE IZQUIERDA LASER	LASER LEFT DRAG CLAW	5							
S/Nº	Z275078000	UÑA ARRASTRE DERECHA LASER	LASER RIGHT DRAG CLAW	5							
	Q232050000	ARANDELA A8	WASHER A8	20							
	Q152046000	TORNILLO EXAGON. CON CUELLO	HEXAGONAL BOLT. WITH NECK	10							
	Q232040000	ARANDELA A6	WASHER A6	10							
	Q222012000	TUERCA AUTOBLOCANTE M6	SELF-LOCKING NUT M6	10							
14	Z276311000	SOPORTE UÑA SECADO COMPL.	COMPL. DRYER CLAY SUPPORT	1							
	Q012042000	TORNILLO EXAGONAL M6X15 A304	HEXAGONAL BOLT M6x15 A304	2							
	Q232050000	ARANDELA A8	WASHER A8	4							
	Q232040000	ARANDELA A6	WASHER A6	2							
	Q222012000	TUERCA AUTOBLOCANTE M6	SELF-LOCKING NUT M6	2							
15	Z316354000	ABRAZADERA DE PRESION	PRESSURE CLAMP	2							
16	3712300000	TUBO PG21 0233.204.023	PIPE PG21 0233.204.023	1							
17	Z703006000	RACORD A 90 SFWO-P213T	CONNECTION A 90 SFWO-P213T	2							
	R023025000	CONTRATUERCA (GAES)	COUNTERNUT (GAES)	2							
18	Z276361000	POSTERIOR CUBIERTA COMPLET.	COMPLET. REAR COVER	1							
19	Z276345000	LATERAL CUBIERTA	SIDE COVER	1							
20	Z276346000	TAPA CUBIERTA	COVER LID	1							
	Q262040000	ARANDELA GROW. A6 A.304	WASHER GROW. A6 A.304	16							
	Q162040000	TUERCA EXAGONAL M6	HEXAGONAL NUT M6	16							
	Q152017000	TORNILLO AMARRE M6X13 A304	FASTENING BOLT M6X13 A304	4							
	Q221343000	REMACHE EXAGONAL M6	HEXAGONAL RIVET M6	8							
21	Z276751000	LATERAL CUBIERTA	SIDE COVER	4							

MOD.	LAVAVAJILLAS COMPACTOS COMPACT DISHWASHERS	ZONA	TUNEL DE SECADO / DRYING TUNNEL	PLANO	C-2132 C-2133

ITEM	CODIGO	DENOMINACION	TEXTO	TUNEL DE SECADO							NOTAS
22	Z276342000	ANTERIOR CUBIERTA COMPLETA	COMPLET E FRONT COVER	1							
23	Z276391000	RESISTENCIA ALETAS 1500W 230V	FIN RESISTOR 1500W 230V	6							
	Q221305000	TUERCA EXG. AUTO M4 ZINCADA	HEXAG. NUT AUTO M4 ZINC-COA	12							
24	Z276329000	FRONTAL CAJA RESISTENCIA	RESISTOR BOX FRONT	1							
25	Z276326000	LATERAL IZDO. CAJA RESISTENC.	LEFT SIDE RESISTOR BOX	1							
26	Z276331000	VAINA TS. COMPLETA	COMPLETE TS. SHELL	1							
	Q012042000	TORNILLO EXAGONAL M6X15 A304	HEXAGONAL BOLT M6x15 A304	1							
	Q262040000	ARANDELA GROW. A6 A.304	WASHER GROW. A6 A.304	1							
	Q221343000	REMACHE EXAGONAL M6	HEXAGONAL RIVET M6	1							
27	Z276315000	SALIDA SECADO SOLDADO	WELDED DRYER OUTPUT	1							
	Q262040000	ARANDELA GROW. A6 A.304	WASHER GROW. A6 A.304	8							
	Q162040000	TUERCA EXAGONAL M6	HEXAGONAL NUT M6	16							
28	Z276301000	TUNEL SECADO SOLDADO	WELDED DRYER TUNNEL	1							
29	Z203047000	SOPORTE TERMOSTATOS	THERMOSTAT SUPPORT	1							
	Q232040000	ARANDELA A6	WASHER A6	2							
	Q162040000	TUERCA EXAGONAL M6	HEXAGONAL NUT M6	2							
	Q152024000	TORNILLO AVELLANADO M4X8	COUNTERSUNK BOLT M4x8	2							
30	Z203060000	TERMOSTATO 150ºC	THERMOSTAT 150ºC	1							
31	Z276318000	TAPA SALIDA SECADO	DRYER OUTPUT LID	1							
	Q302022000	ARANDELA 16X6X1.2 A.304	WASHER 16X6X1.2 A.304	2							
	Q152046000	TORNILLO EXAGON. CON CUELLO	HEXAGONAL BOLT. WITH NECK	2							
32	Z276394000	SOPORTE VENTILADOR	FAN BRACKET	1							
	Q082005000	TORNILLO CHAP. Ø4,2X13 4.2X13	PLATE BOLT Ø4.2X13 4.2X13	4							
	Q262040000	ARANDELA GROW. A6 A.304	WASHER GROW. A6 A.304	6							
	Q162040000	TUERCA EXAGONAL M6	HEXAGONAL NUT M6	6							
33	Z316412000	VENTILADOR CENTRIFUGO	SPIN FAN	1							
34	Z276375000	AMARRE VENTILADOR	FAN FASTENING	2							
35	Z276376000	LATERAL DCHO.CAJA RESISTENC.	RIGHT SIDE RESISTOR BOX.	1							

MOD.	LAVAVAJILLAS COMPACTOS COMPACT DISHWASHERS		ZONA	TUNEL DE SECADO / DRYING TUNNEL					PLANO	C-2132 C-2133	

ITEM	CODIGO	DENOMINACION	TEXTO	TUNEL DE SECADO							NOTAS
36	Z276330000	POSTERIOR CAJA RESISTENCIA	REAR RESISTOR BOX	1							
	Q012042000	TORNILLO EXAGONAL M6X15 A304	HEXAGONAL BOLT M6x15 A304	14							
	Q262040000	ARANDELA GROW. A6 A.304	WASHER GROW. A6 A.304	14							
	Q221343000	REMACHE EXAGONAL M6	HEXAGONAL RIVET M6	14							
S/Nº	Z316381000	CABLEADO SECADO	DRYER WIRING	1							
S/Nº	Z316382000	CABLEADO AUXILIAR SECADO	AUX. DRYER WIRING	1							

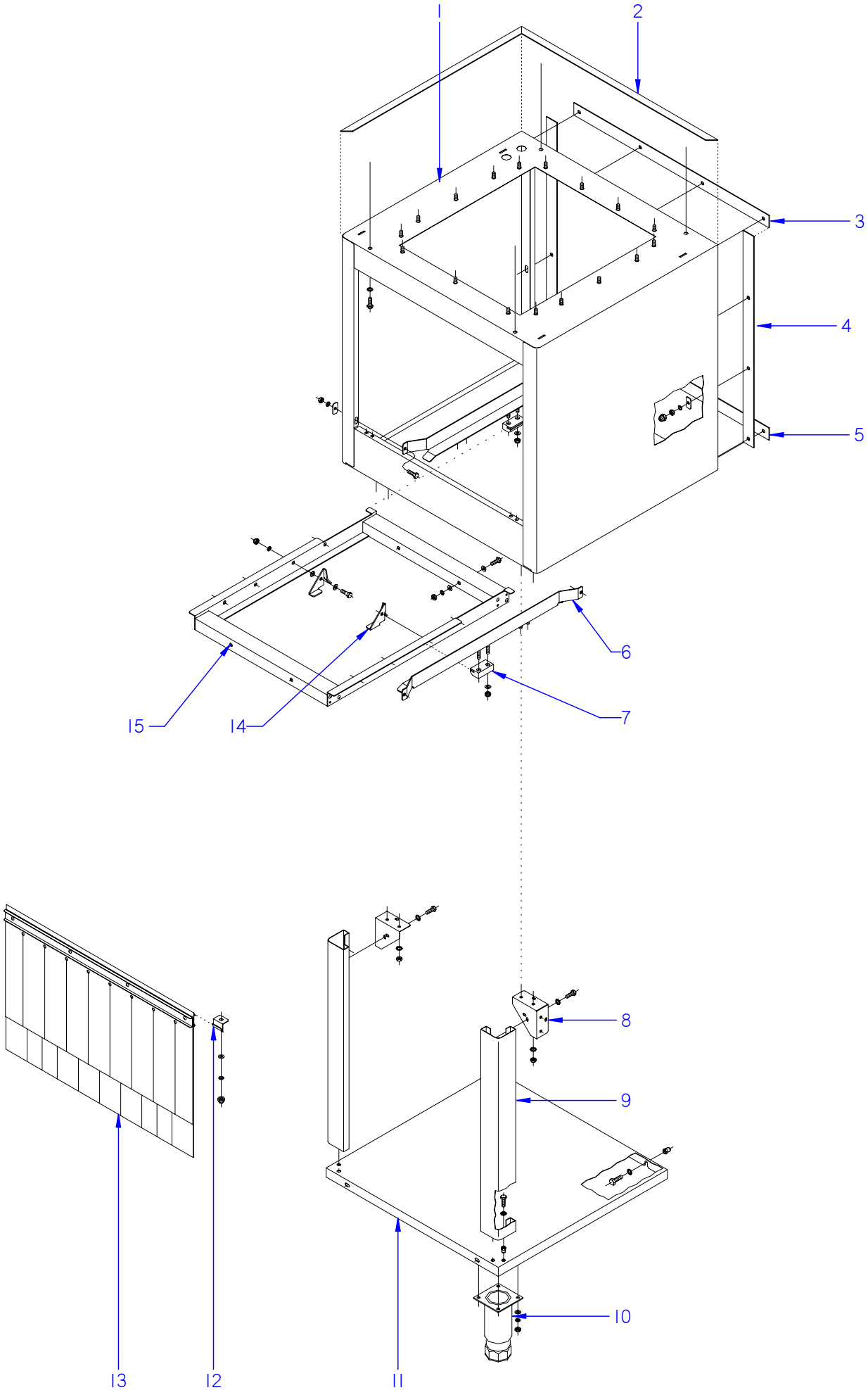

ITEM MARCADO EN COLOR = REPUESTO RECOMENDADO
COLOURED ITEM = RECOMMENDED SPARE PART

N plano	Firma	Fecha	Aparato	Lamina	
C-2134		2008-10	TUNEL CONDENSADOR DE VAHOS LAVAVAJILLAS COMPACTOS	15	Fagor Industrial S.Coop. Oñate

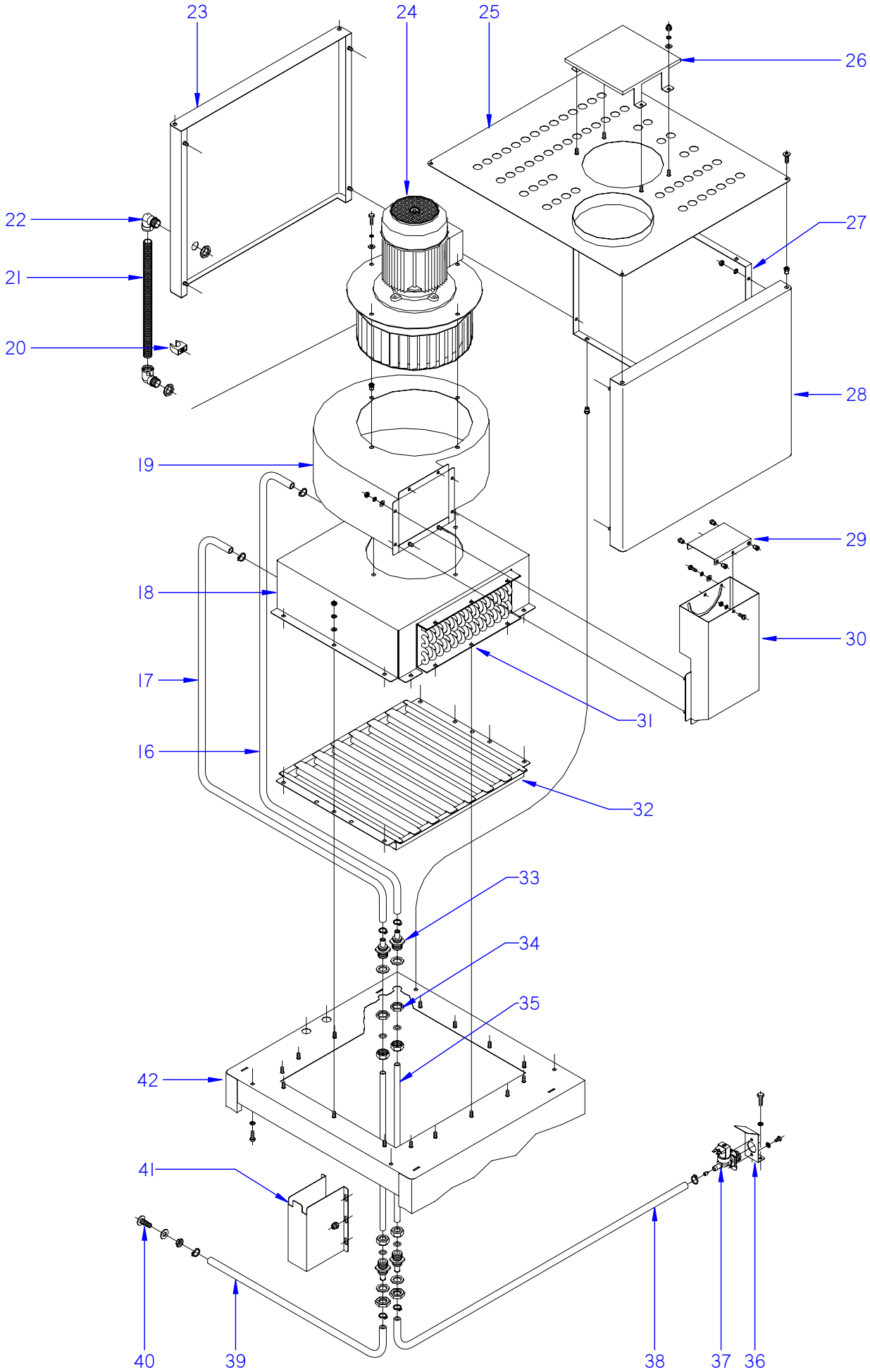

ITEM MARCADO EN COLOR = REPUESTO RECOMENDADO
COLOURED ITEM = RECOMMENDED SPARE PART

N plano	Firma	Fecha	Aparato		Lamina	
C-2135		2008-10	CONDENSADOR DE VAHOS LAVAVAJILLAS COMPACTOS		16	Fagor Industrial S.Coop. FAGOR Oñate

MOD.	LAVAVAJILLAS COMPACTOS COMPACT DISHWASHERS	ZONA	TUNEL CONDENSADOR DE VAHOS STEAM CONDENSER TUNNEL	PLANO	C-2134 C-2135

ITEM	CODIGO	DENOMINACION	TEXTO	TUNEL COND. DE VAHOS							NOTAS
1	Z276732000	TUNEL CONDENSADOR DE VAHOS	COMP STEAM CONDENSOR TUN	1							
	Z276520000	PROTECTOR SUPERIOR SOLDAD.	WELDED UPPER PROTECTOR	1							
2	Z270334000	PERFIL	PROFILE	4							
3	Z276206000	JUNTA SUPERIOR COMPACTO**	COMPACT UPPER JOINT**	1							
4	Z276208000	JUNTA LATERAL COMPACTO**	COMPACT SIDE JOINT**	2							
5	Z276207000	JUNTA INFERIOR COMPACTO**	COMPACT LOWER JOINT **	1							
	Q302022000	ARANDELA 16X6X1.2 A.304	WASHER 16X6X1.2 A.304	12							
	Q262040000	ARANDELA GROW. A6 A304	WASHER GROW. A6 A304	12							
	Q162040000	TUERCA EXAGONAL M6	HEXAGONAL NUT M6	12							
	Q212040000	TUERCA SOMBRERETE M6	COWL NUT M6	10							
6	Z276309000	GUIA DE SECADO COMPLETO	COMPLETE DRYER GUIDE	2							
7	Z275075000	DESLIZAMIENTO GUIAS	GUIDE SLIDE	4							
	Q232040000	ARANDELA A6	WASHER A6	8							
	Q222012000	TUERCA AUTOBLOCANTE M6	SELF-LOCKING NUT M6	8							
	Q012042000	TORNILLO EXAGONAL M6X15 A304	HEXAGONAL BOLT M6x15 A304	4							
	Q262040000	ARANDELA GROW. A6 A304	WASHER GROW. A6 A304	4							
	Z310341000	ARANDELA RECTANGULAR	RECTANGULAR WASHER	4							
	Q162040000	TUERCA EXAGONAL M6	HEXAGONAL NUT M6	4							
8	Z276354000	AMARRE PATA	LEG FASTENING	2							
	Q262040000	ARANDELA GROW. A6 A304	WASHER GROW. A6 A304	4							
	Q162040000	TUERCA EXAGONAL M6	HEXAGONAL NUT M6	4							
9	Z276395000	PATA TUNEL SECADO COMPLETA	COMPLETE DRYER TUNNEL LEG	2							
10	X260151000	PATA REGULABLE	ADJUSTABLE LEG	2							
	Q302022000	ARANDELA 16X6X1.2 A.304	WASHER 16X6X1.2 A.304	8							
	Q262040000	ARANDELA GROW. A6 A.304	WASHER GROW. A6 A.304	8							
	Q162040000	TUERCA EXAGONAL M6	HEXAGONAL NUT M6	8							
11	Z276398000	BANDEJA TUNEL SECADO COMPL.	COMPL. DRYER TUNNEL TRAY	1							
	Q221342000	REMACHE EXAGONAL M5	HEXAGONAL RIVET M5	8							
	Q242030000	ARANDELA ABANICO A5 A.304	FAN WASHER A5 A.304	8							
	Q012031000	TORNILLO EXAGONAL M5X10 A304	HEXAGONAL BOLT M5x10 A304	8							

MOD.	LAVAVAJILLAS COMPACTOS COMPACT DISHWASHERS	ZONA	TUNEL CONDENSADOR DE VAHOS STEAM CONDENSER TUNNEL	PLANO	C-2134 C-2135

ITEM	CODIGO	DENOMINACION	TEXTO	TUNEL COND. DE VAHOS							NOTAS
12	Z270326000	SUJECION CORTINA	CURTAIN FASTENING	2							
	Q262030000	ARANDELA GROW. A5 A.304	WASHER GROW. A5 A.304	2							
	Q232040000	ARANDELA A6	WASHER A6	2							
13	Z276419000	CORTINA EXTERIOR COMPLETA	COMPLETE EXTERIOR CURTAIN	1							
14	Z275077000	UÑA ARRASTRE IZQUIERDA LASER	LASER LEFT DRAG CLAW	5							
S/Nº	Z275078000	UÑA ARRASTRE DERECHA LASER	LASER RIGHT DRAG CLAW	5							
	Q232050000	ARANDELA A8	WASHER A8	20							
	Q152046000	TORNILLO EXAGON. CON CUELLO	HEXAGONAL BOLT. WITH NECK	10							
	Q232040000	ARANDELA A6	WASHER A6	10							
	Q222012000	TUERCA AUTOBLOCANTE M6	SELF-LOCKING NUT M6	10							
	Z276311000	SOPORTE UÑA SECADO COMPL.	COMPL. DRYER CLAY SUPPORT	1							
	Q012042000	TORNILLO EXAGONAL M6X15 A304	HEXAGONAL BOLT M6x15 A304	2							
	Q232050000	ARANDELA A8	WASHER A8	4							
	Q232040000	ARANDELA A6	WASHER A6	2							
	Q222012000	TUERCA AUTOBLOCANTE M6	SELF-LOCKING NUT M6	2							
16	3676900000	TUBO GOMA NEGRA Ø 17*10	BLACK RUBBER PIPE 17*10	1							
	Q881302000	ABRAZADERA 12-20	CLAMP 12-20	2							
17	3676900000	TUBO GOMA NEGRA Ø 17*10	BLACK RUBBER PIPE 17*10	1							
	Q881302000	ABRAZADERA 12-20	CLAMP 12-20	2							
18	Z276741000	CUBIERTA BATERIA	BATTERY COVER	1							
	Q221343000	REMACHE EXAGONAL M6	HEXAGONAL RIVET M6	4							
	Q262040000	ARANDELA GROW. A6 A.304	WASHER GROW. A6 A.304	12							
	Q162040000	TUERCA EXAGONAL M6	HEXAGONAL NUT M6	12							
19	Z276742000	CUBIERTA VENTOLA COMPLETA	COMPLETE VENTOLA COVER	1							
	Q221343000	REMACHE EXAGONAL M6	HEXAGONAL RIVET M6	8							
20	Z316354000	ABRAZADERA DE PRESION	PRESSURE CLAMP	2							
21	3712300000	TUBO PG21 0233.204.023	PIPE PG21 0233.204.023	1							
22	Z703006000	RACORD A 90 SFWO-P213T	CONNECTION A 90 SFWO-P213T	2							
	R023025000	CONTRATUERCA (GAES)	COUNTERNUT (GAES)	2							
23	Z276752000	POSTERIOR CUBIERTA COMPL.	COMPLET. REAR COVER	1							
24	Z276760000	VENTILADOR CENTRIFUGO	SPIN FAN	1							

MOD.	LAVAVAJILLAS COMPACTOS COMPACT DISHWASHERS	ZONA	TUNEL CONDENSADOR DE VAHOS STEAM CONDENSER TUNNEL	PLANO	C-2134 C-2135

ITEM	CODIGO	DENOMINACION	TEXTO	TUNEL COND. DE VAHOS							NOTAS
25	Z276756000	TAPA CUBIERTA COMPLETA	COMPLETE COVER LID	1							
	Q152017000	TORNILLO AMARRE M6X13 A304	FASTENING BOLT M6X13 A304	4							
	Q221343000	REMACHE EXAGONAL M6	HEXAGONAL RIVET M6	8							
26	Z276759000	CUBIERTA MOTOR	MOTOR COVER								
	Q262040000	ARANDELA GROW. A6 A.304	WASHER GROW. A6 A.304	16							
	Q162040000	TUERCA EXAGONAL M6	HEXAGONAL NUT M6	16							
27	Z276751000	LATERAL CUBIERTA	SIDE COVER	2							
28	Z276342000	ANTERIOR CUBIERTA COMPLETA	COMPLET E FRONT COVER	1							
29	Z276755000	REGULADOR SALIDA AIRE	AIR OUTPUT CONTROL	1							
	Q152047000	TORNILLO EXAGON. CON CUELLO	HEXAGONAL BOLT. WITH NECK	2							
	Q232050000	ARANDELA A8	WASHER A8	2							
	Q262030000	ARANDELA GROW. A5 A.304	WASHER GROW. A5 A.304	2							
	Q162030000	TUERCA EXAGONAL M5	HEXAGONAL NUT M5	2							
	Q222011000	REMACHE EXAGONAL M5 (INOX)	HEXAGONAL RIVET M5 (INOX)	2							
30	Z276746000	SALIDA AIRE COMPLETO	COMPLETE AIR OUTPUT	1							
	Q232040000	ARANDELA A6	WASHER A6	4							
	Q162040000	TUERCA EXAGONAL M6	HEXAGONAL NUT M6	4							
	Q262040000	ARANDELA GROW. A6 A.304	WASHER GROW. A6 A.304	12							
	Q012042000	TORN.EXA. M6X15 AISI 304	HEX BOLT M6X15 AISI 304	8							
31	Z276762000	BATERIA COMPLETA	COMPLETE BATTERY	1							
32	Z276734000	REJILLA ASPIRACION VAHOS COM.	COM. STEAM EXTRACT. GRILLE	1							
33	Z271901000	PASAMUROS ACLARADO	RINSE BUSHING	4							
	Q307032000	JUNTA 32X21X3	JOINT 32X21X3	4							
34	Q223031000	TUERCA M.24x2.5	NUT M.24X2.5	2							
	Q223023000	TUERCA EXAGONAL 5-8 LATON	HEX NUT 5-8 BRASS	2							
35	Z276761000	TUBO EMPALME	CONNECTION PIPE	2							
	Q307063000	JUNTA TORICA 12.29X19.35X3.53	O-RING 12.29X19.35X3.53	4							
	Q223108000	TUERCA M.24X2.5	NUT M.24X2.5	4							

MOD.	LAVAVAJILLAS COMPACTOS COMPACT DISHWASHERS	ZONA	TUNEL CONDENSADOR DE VAHOS STEAM CONDENSER TUNNEL	PLANO	C-2134 C-2135

ITEM	CODIGO	DENOMINACION	TEXTO	TUNEL COND. DE VAHOS							NOTAS
36	Z201101000	ESCUADRA AMARRE ELECTROVA	SOLENOID VALVE BRACKET	1							
	Q032021000	TORNILLO ALOMADO M4X10	CURVED SCREW M4X10	2							
	Q232020000	ARANDELA A-4	WASHER A-4	2							
	Q242020000	ARANDELA ABANICO A.4 A304	FAN WASHER A.4 A304	2							
	Q012042000	TORNILLO EXAGONAL M6X15 A304	HEXAGONAL BOLT M6x15 A304	2							
	Q262040000	ARANDELA GROW. A6 A.304	WASHER GROW. A6 A.304	14							
37	Z106811000	ELECTROVALVULA MONTADA	SOLENOID VALVE MOUNTED	1							
38	3676900000	TUBO GOMA NEGRA Ø 17*10	BLACK RUBBER PIPE 17*10	1							
	Q881302000	ABRAZADERA 12-20	CLAMP 12-20	2							
39	3676900000	TUBO GOMA NEGRA Ø 17*10	BLACK RUBBER PIPE 17*10	1							
	Q881302000	ABRAZADERA 12-20	CLAMP 12-20	2							
40	Z600907000	TOMA DE PRESION	PRESSURE CONNECTION	1							
	Z600908000	ARANDELA	WASHER	1							
	Q223013000	TUERCA	NUT	1							
41	Z276772000	CUBIERTA	COVER	1							
	Q152014000	PERNO SOLDADO M5X10	WELDED BOLT M5X10	6							
	Q212031000	TUERCA SOMBRERETE M5	COWL NUT M5	6							
42	Z276732000	TUNEL CONDENSADOR DE VAHOS	COMP STEAM CONDENSOR TUN	1							
S/Nº	Z316702000	CABLEADO CONDENSADOR	CONDENSOR WIRING	1							

MOD.	LAVAVAJILLAS COMPACTOS COMPACT DISHWASHERS	ZONA	PIEZAS ESPEC. PARA LA VERSION SIN NEUTRO SPECIF.PARTS FOR VERSION WITHOUT NEUTRAL	PLANO	

ITEM	CODIGO	DENOMINACION	TEXTO	FI-160	FI-200						NOTAS
	Z273039000	CONDENSADOR 10MF 550V	CONDENSOR 10MF 550V	2	2						
	Z273038000	CABLEADO TRANSF. SIN NEUTRO	TRANSF. WIRING W/O NEUTRAL	1	1						
	P503059000	TRANSFORMADOR 440V.S.N.	TRANSFORMER 440V.S.N.	1	1						

MOD.	LAVAVAJILLAS COMPACTOS COMPACT DISHWASHERS	ZONA	PIEZAS A ELIMINAR E INTRODUCIR VERSION H'' PARTS TO BE ELIMINATED AND INTRODUCED	PLANO	

ITEM	CODIGO	DENOMINACION	TEXTO	FI-200	FI-200 H	ECO-200	ECO-200 H				NOTAS
		PIEZAS A ELIMINAR	**PARTS TO BE REMOVED**								
10	Z105013000	PIÑON	PINION	1	_	1	_				PLANO C-2123
12	Z121741000	RESISTENCIA 9600 230V.	RESISTOR 9600 230V	1	_	_	_				PLANO C-2125
		PIEZAS A INTRODUCIR	**PARTS TO BE INCLUDED**								
10	Z275007000	PIÑON	PINION	_	1	_	1				PLANO C-2123
12	Z129502000	RESISTENCIA 220-240 V.	RESISTOR 220-240 V.	_	1	_	_				PLANO C-2125

MOD.	LAVAVAJILLAS COMPACTOS COMPACT DISHWASHERS	ZONA	PIEZAS A INTRODUCIR EN LA VERSION 220 V. PARTS A INTRODUCED IN VERSION 220 V.	PLANO	

ITEM	CODIGO	DENOMINACION	TEXTO	FI-160	FI-200	ECO-160	ECO-200				NOTAS
		PIEZAS A INTRODUCIR EN LA VERSION 220 V.									
15	Z513081000	SECCIONAD. 4P. 160A SIEMENS	SECTIONAT. 4P.160A SIEMENS	1	1	_	_				INTRODUCIDO 04.01.10
15	P683039000	SECCIONADOR 4P.63A SIEMENS	SECTIONATOR 4P.63A SIEMENS	_	_	1	1				INTRODUCIDO 01.12.09
	Z513083000	BORNE DISTRIBUIDOR 70 MM2	DISTRIBUI. 70 MM2 TERMINAL	1	1	_	_				INTRODUCIDO 01.12.09
	Z273083000	BORNE DISTRIBUIDOR 35 MM2	DISTRIBUI. 35 MM2 TERMINAL	_	_	3	3				INTRODUCIDO 01.12.09
	Z273086000	CABLEADO SECCIONADOR 160A	SECTIONATOR 160A WIRING	1	1	_	_				INTRODUCIDO 04.01.10
	Z273084000	CABLEADO SECCIONADOR 63A	SECTIONATOR 63A WIRING	_	_	1	1				INTRODUCIDO 01.12.09

FI-160 FI-160AR FI-200 FI-200AR FI-200H FI-200H AR

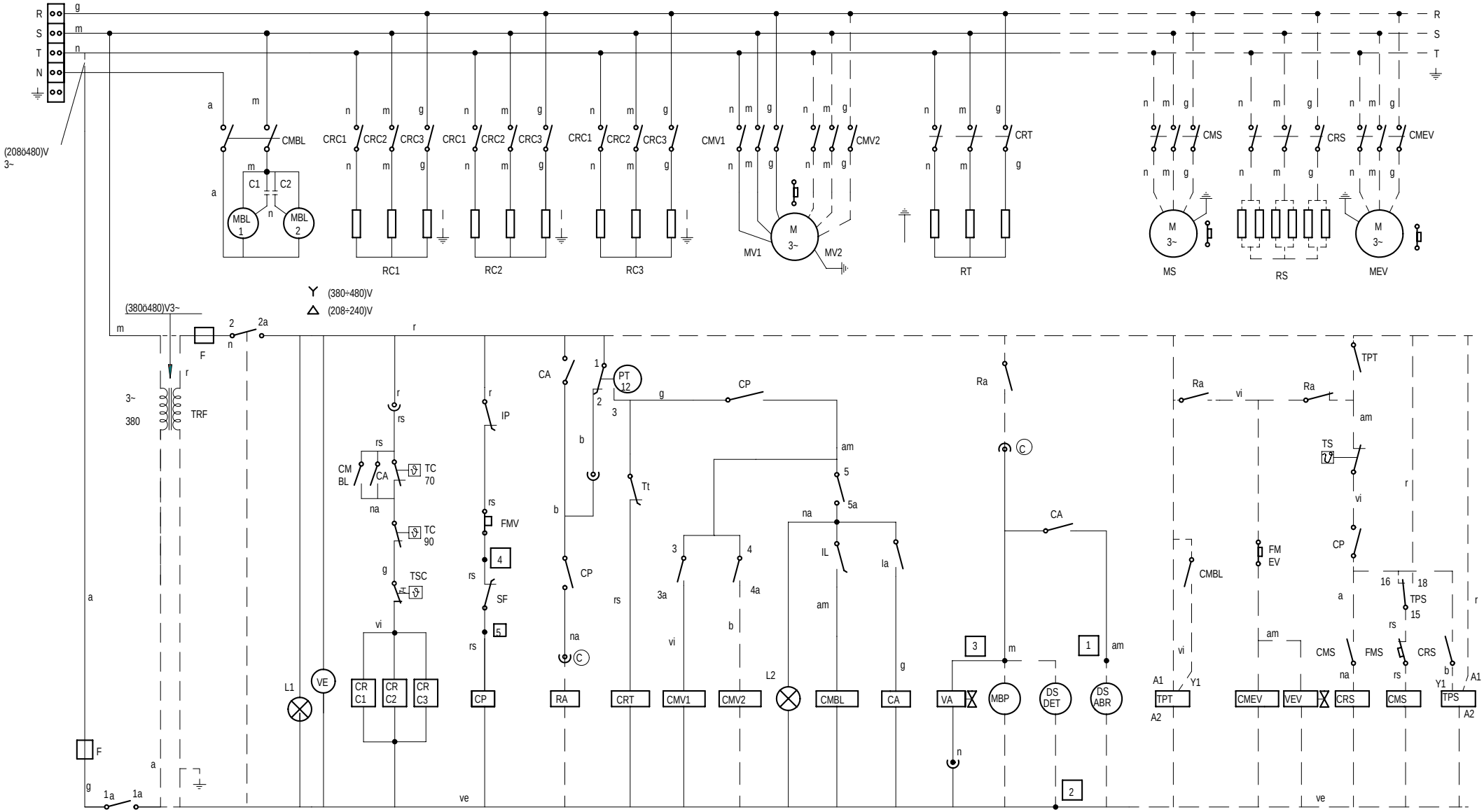

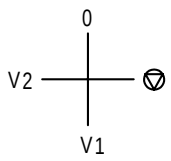

IG	1 1a	2 2a	3 3a	4 4a	5 5a	
0						
▽	X	X				
V1	X	X	X		X	X
V2	X	X		X	X	X

Z273018000

HC-17294 - 5

ECO -160 ECO -200 ECO -200H

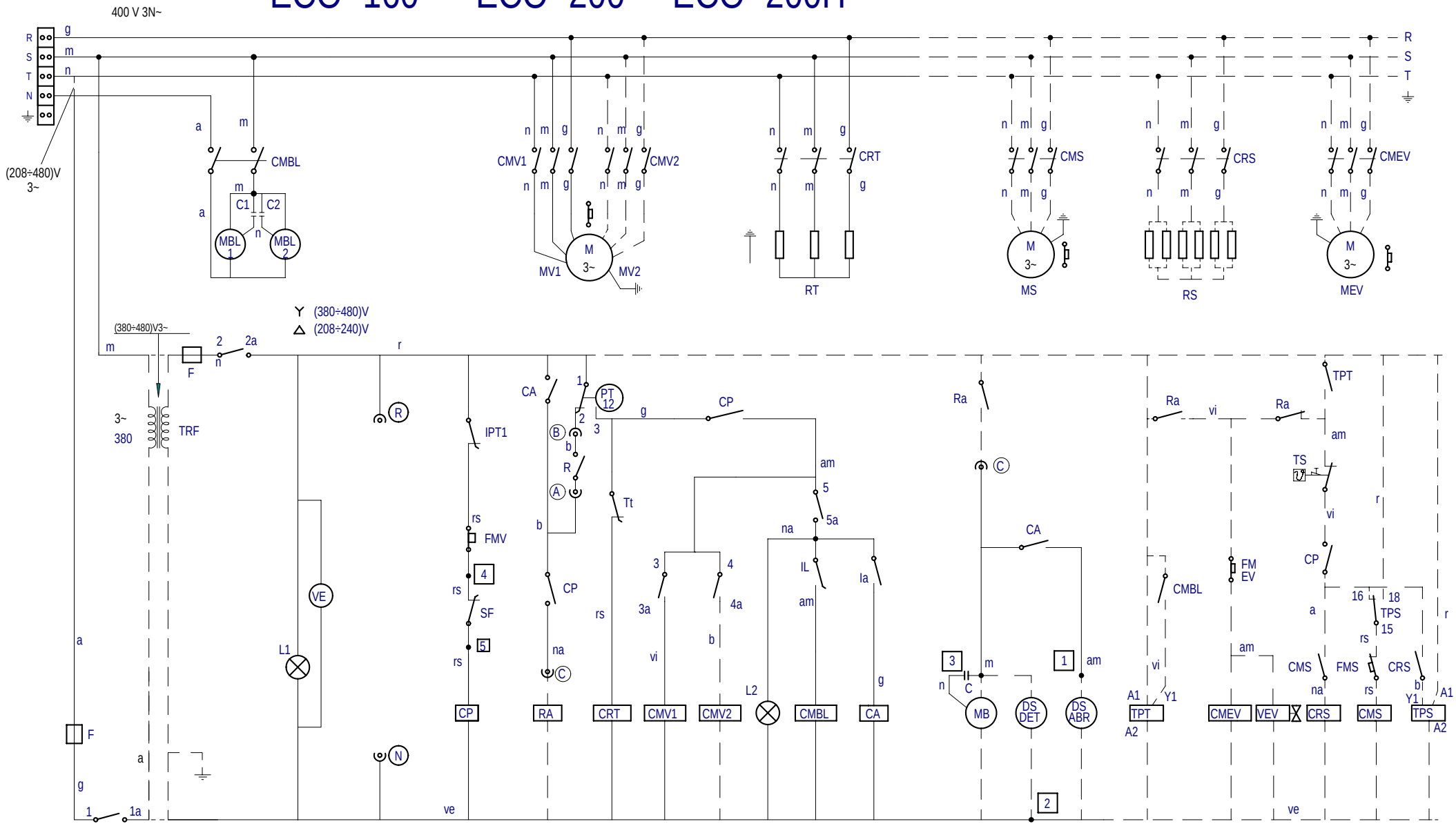

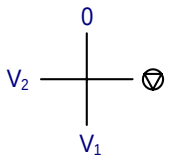

IG	1 1a	2 2a	3 3a	4 4a	5 5a	
0						
▽	X	X				
V_1	X	X	X		X	X
V_2	X	X		X	X	X

Z-283020

HC-17304-2

FI-200 W

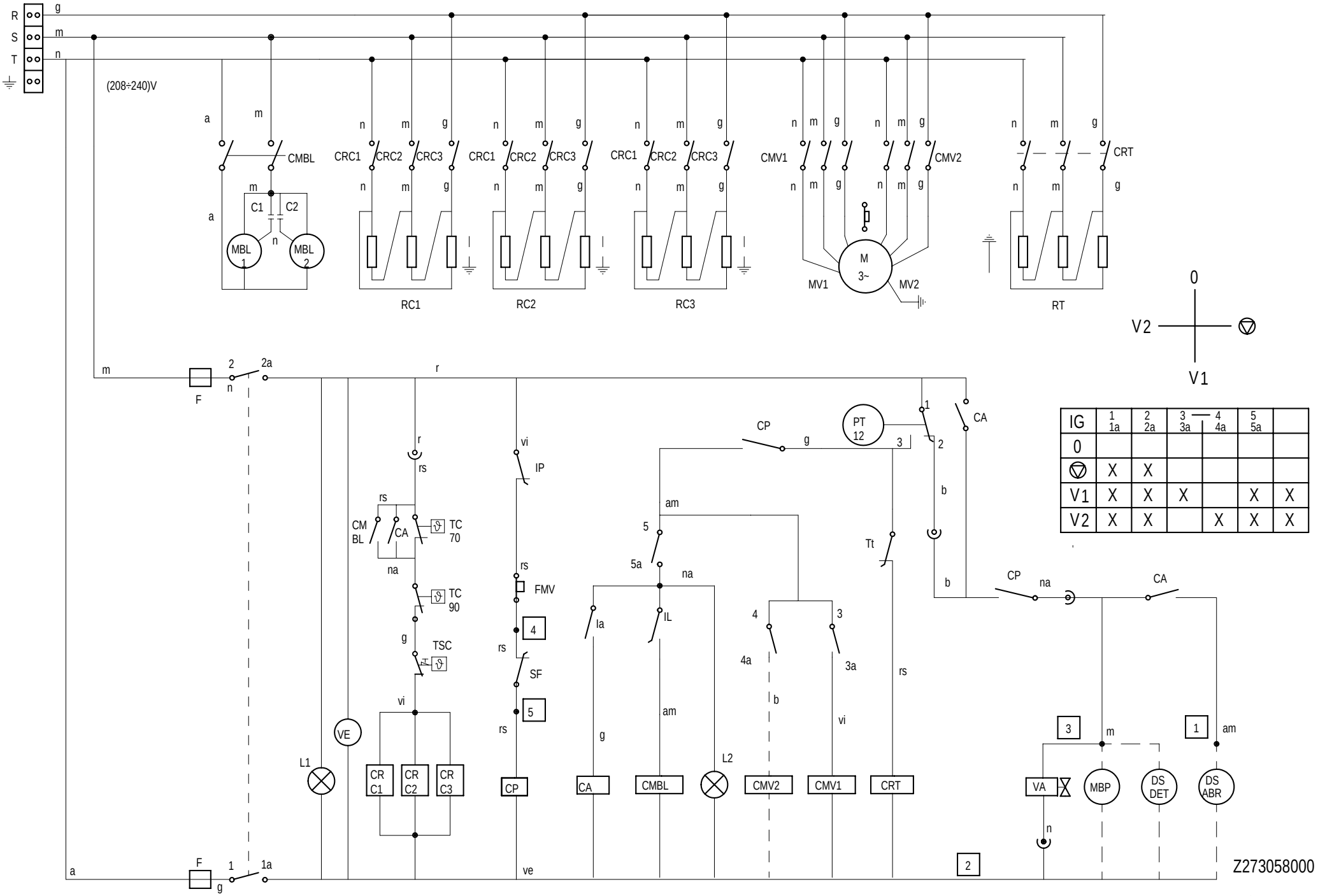

IG	1 1a	2 2a	3 3a	4 4a	5 5a	
0						
▽	X	X				
V1	X	X	X		X	X
V2	X	X		X	X	X

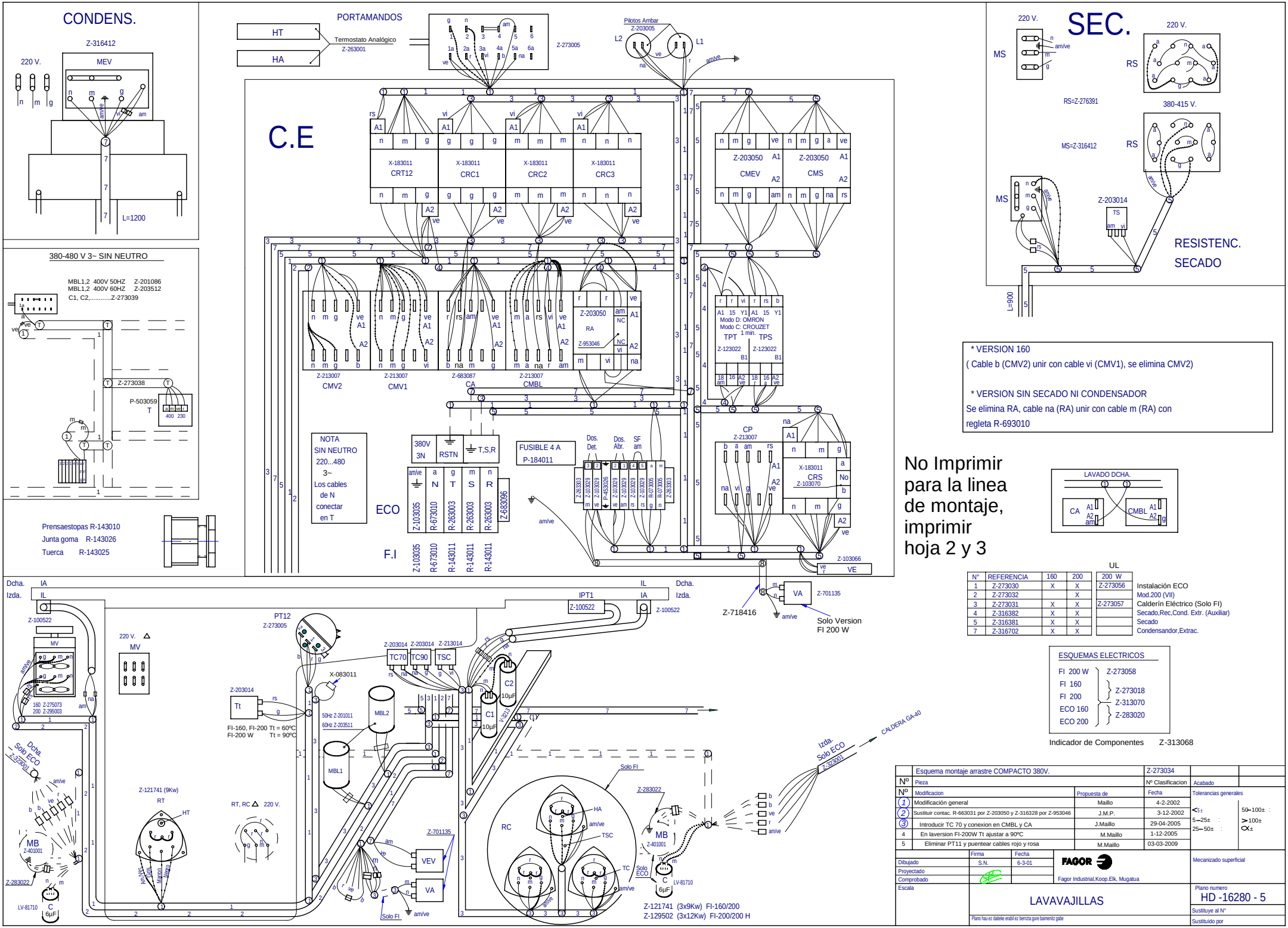

N°	REFERENCIA	160	200	200 W	
1	Z-273030	X	X	Z-273056	Instalación ECO
2	Z-273032		X		Mod.200 (VII)
3	Z-273031	X	X	Z-273057	Calderín Eléctrico (Solo FI)
4	Z-316382	X	X		Secado,Rec,Cond. Extr. (Auxiliar)
5	Z-316381	X	X		Secado
7	Z-316702	X	X		Condensandor,Extrac.

ESQUEMAS ELECTRICOS

FI 200 W	Z-273058
FI 160	Z-273018
FI 200	Z-313070
ECO 160	Z-283020
ECO 200	

Indicador de Componentes Z-313068

	Esquema montaje arrastre COMPACTO 380V.		Z-273034
Nº	Pieza		Nº Clasificacion
Nº	Modificacion	Propuesta de	Fecha
1	Modificación general	Maillo	4-2-2002
2	Sustituir contac. R-663031 por Z-203050 y Z-316328 por Z-953046	J.M.P.	3-12-2002
3	Introducir TC 70 y conexion en CMBL y CA	J.Maillo	29-04-2005
4	En laversion FI-200W Tt ajustar a 90ºC	M.Maillo	1-12-2005
5	Eliminar PT11 y puentear cables rojo y rosa	M.Maillo	03-03-2009

	Firma	Fecha
Dibujado	S.N.	6-3-01
Proyectado		
Comprobado		
Escala		

FAGOR
Fagor Industrial,Koop.Elk. Mugatua

Acabado
Tolerancias generales
<5± 50–100±
5–25± >100±
25–50± <±

Mecanizado superficial

LAVAVAJILLAS

Plano numero
HD -16280 - 5

Sustituye al N°

Sustituido por

Plano hau ez dakeke erabil ez berrizta gure baimenitz gabe

ESPANOL

Ⓐ Ⓑ = Puntos de conexion con R
Ⓒ = Puntos de conex.160/200 sin secado ni condensador
C,C1,C2 = Condensador
CA = Rele auxiliar aclarado
CMBL 1/2/3 = Contactor bomba lavado 1/2/3
CMBPL = Contactor bomba prelavado
CMEV = Contactor motor extractor
CMS = Contactor motor secado
CMV 1/2 = Contactor avance 1/2
CMREC = Contactor motor recuperador
CRC 11/12/13/21/22 = Contactor calentamiento calderin
CRS = Contactor resistencia secado
CRTA = Contactor calentamiento aclarado
CRT2 = Contactor calentamiento tanque 2
CRT11/12 = Contactor calentamiento tanque 1
CP = Rele puerta
DS.ABR = Dosificador abrillantador
DS.DET.= Dosificador detergente
F = Fusible
FMEV = Rele termico motor extractor
FML1/2/3 = S. Termico bomba lavado 1/2/3
FMS = Rele termico motor secado
FMREC = Rele termico motor recuperador
FMV = S. Termica motor avance
Ia = Micro aclarado
IG = Interruptor general
IL = Micro lavado
Im1/2/3 = Pulsador de marcha
IPA = Micro puerta aclarado
IP1/2/3 = Pulsador de parada
IPPL = Micro puerta prelavado
IPT1/2/3 = Micro puerta tanque 1/2/3
L1 = Piloto de encendido
L2 = Piloto marcha
MB = Bomba de llenado y aclarado
MBA = Bomba aclarado
MBL1/2/3 = Bomba lavado 1/2/3
MBP = Bomba de presion
MBPL = Bomba prelavado
MEV = Motor extractor vahos
MREC = Motor recuperador
MS = Motor secado
MV = Motor avance
Pa = Presostato aclarado
PE1/2 = Parada de emergencia
PPL = Presostato prelavado
PT11 = Presostato lavado 1 calentamiento
PT12 = Presostato lavado 1 llenado
PT21 = Presostato lavado 2 calentamiento
PT2/PT22 = Presostato lavado 2 llenado
PT3 = Presostato lavado 3 llenado
R = Rele de Generador A.C.
Ⓡ Ⓝ = Toma de alimentacion Generador A.C.
Ra = Rele auxiliar aclarado y llenado
RC11/12/13/21/22 = Resistencia calderin
RS = Resistencia secado
RTA = Resistencia calentamiento aclarado
RT2 = Resistencia tanque 2
RT11/12 = Resistencia tanque 1
SF = Micro fin recorrido
TA = Termostato aclarado
TC,1/2 = Termostato calderin
TPA = Temporizador Aclarado
TPT = Temporizador inicio
TPS = Temporizador secado
TREC = Termostato recuperador
TRF = Transformador
TS = Termostato secado
TSC,1/2 = Limitador calderin
Tt1/2 = Termostato tanque 1/2
VA = Electrovalvula llenado y aclarado
VE = Ventilador cuadro electrico
VEV = Electrovalvula condensacion vahos
VL1/2 = Electrovalvula llenado tanque
VG = Electrovalvula general
VREC = Electrovalvula salida

COLOR		COLORES
a	=	Azul
am	=	Amarillo
am/ve	=	Amarillo/verde
b	=	Blanco
g	=	Gris
m	=	Marrón
n	=	Negro
na	=	Naranja
r	=	Rojo
rs	=	Rosa
ve	=	Verde
vi	=	Violeta

FRANÇAIS

Points de conexion R
Points de conexion 160/200 sans sechege ni condensateur
Condensateur
Relais auxilier rinçage
Contacteur pompe lavage 1/2/3
Contacteur pompe prelavage
Contacteur moteur extracteur
Contacteur moteur sechage
Contacteur avance 1/2
Contacteur moteur recuperateur
Contacteur chauf. surchauffeur
Contacteur resistances sechage
Contacteur chaufage rinçage
Contacteur chaufage cuve 2
Contacteur chaufage cuve 1
Relais porte
Dosseur de tensoactif
Dosseur de detergent
Fusible
Relais termique moteur extracteur
S. Termique pompe lavage 1/2/3
Relais termique moteur sechage
Relais termique moteur recuperateur
S. Termica moteur avance
Micro rinçage
Interrupteur general
Micro lavage
Bouton marche
Micro porte rinçage
Bouton arrêt
Micro porte prelavage
Micro porte cuve 1/2/3
Voyant funcionement
Voyant demarrage
Pompe remplissage rinçage
Pompe rinçage
Pompe lavage 1/2/3
Pompe de pression
Pompe prelavage
Moteur extracteur vapeur
Moteur recuperateur
Moteur sechage
Moteur avance
Pressostat rinçage
Arrêt d´urgence
Pressostat prelavage
Pressostat lavage 1 chauffage
Pressostat lavage 1 remplissage
Pressostat lavage 2 chauffage
Pressostat lavage 2 remplissage
Pressostat lavage 3 remplissage
Relais du Generateur
Alimentation generateur
Relais auxilier rinçage remplissage
Resistance surchauffeur
Resistance sechage
Resistance chauffage rinçage
Resistance cuve 2
Resistance cuve 1
Micro fin de coourse
Thermostat de rinçage
Thermostat surchauffeur
Temporisateur rinçage
Temporisateur demarrage
Temporisateur sechage
Thermostate recuperateur
Transformateur
Thermostat sechage
Thermostat limiteur surchauffeur
Thermostat cuve 1/2
Electrovanne remplissage rinçage
Ventilateur tableau electrique
Electrovanne condenseur vapeur
Electrovanne remplissage cuve
Electrovanne general
Electrovanne demarrage

COULEURS

Bleu
Jaune
Jaune / vert
Blanc
Gris
Marron
Noir
Orange
Rouge
Rose
Vert
Violet

ENGLISH

Conecction point with R
Connection points 160/200 without drying nor condenser
Condenser
Rinse auxiliary relay
Wash pump contactor 1/2/3
Pre-Wash pump contactor
Exhaust motor contactor
Drying motor contactor
Advance contactor 1/2
Motor recover contactor
Boiler heating contactor
Drying heating element contactor
Rinse heating contactor
Tank heating contactor 2
Tank heating contactor 1
Door relay
Rinse doser
Detergent doser
Fuse
Thermic switch exhaust motor relay
Thermic switch pump 1/2/3
Drying motor thermic relay
Thermic switch recover motor
Thermic switch rack pulling motor
Rinse microswitch
Main switch
Wash microswitch
On pushbutton
Rinse door microswitch
Off pushbutton
Pre-wash door microswitch
Tank door microswitch 1/2/3
Operation light
Start light
Fill and rinse pump
Rinse pump
Wash pump 1/2/3
Pressure pump
Pre-wash pump
Exhaust steam motor
Recover motor
Drying motor
Motor advance
Rinse level switch
Emergency stop
Pre-wash level switch
Wash level 1 and heating switch
Wash level 1 and fill switch
Wash level 2 and heating switch
Wash level 2 and fill switch
Wash 3 fill pressostat
Generator rele
Water heater feeding
Rinse and fill auxiliary relay
Boiler heating element
Drying heating element
Rinse heating heater
Tank heater 2
Tank heater 1
Safety end switch
Rinse thermostat
Boiler thermostat
Rinsing timer
Start timer
Drying timer
Recover thermostat
Trasformer
Drying thermostat
Boiler Hi-limit thermostat
Tank thermostat 1/2
Fill and rinse valve
Switchboard fan
Exhaust condenser solenoide valve
Tank fill valve
Main valve
Outlet solenoide valve

COLOUR

Blue
Yellow
Yellow / green
White
Grey
Brown
Black
Orange
Red
Pink
Green
Purple

DEUTSCH

Anschlusspunkte mit R
Anschlusspunkte 160/200 weder ohne Trocknung noch Kondensator
Kondensator
Hilfsrelais Spülen
Kontaktschütz Waschpumpe 1/2/3
Kontaktschütz Vorwaschpumpe
Kontaktschütz Abzugsmotor
Kontaktschütz Trocknungsmotor
Kontaktschütz Vorlauf 1/2
Kontaktschütz Rekuperatormotor
Kontaktschütz Boilerheizung
Kontaktschütz Trocknungsheizwiderstand
Kontaktschütz Spülheizung
Kontaktschütz Heizung Tank 2
Kontaktschütz Heizung Tank 1
Türrelais
Dosierer Glanzmittel
Dosierer Spülmittel
Sicherung
Thermorelais Abzugsmotor
Thermoschalter Waschpumpe 1/2/3
Thermorelais Trocknungsmotor
Thermorelais Rekuperatormotor
Thermoschalter Vorlaufmotor
Mikroschalter Spülen
Hauptschalter
Mikroschalter Waschen
Betriebstaster
Mikroschalter Tür Spülen
Aus-Taster
Mikroschalter Tür Vorwaschen
Mikroschalter Tür Tank 1/2/3
Betriebsanzeigelampe
Startanzeigelampe
Füll-und Spülpumpe
Spülpumpe
Waschpumpe 1/2/3
Druckpumpe
Vorwaschpumpe
Motor Dampfabzug
Rekuperatormotor
Trocknungsmotor
Vorlaufmotor
Druckregler Spülen
Not-Aus
Druckregler Vorwaschen
Druckregler Waschstufe 1 Heizen
Druckregler Waschstufe 1 Füllen
Druckregler Waschstufe 2 Heizen
Druckregler Waschstufe 2 Füllen
Druckwächter Spülgang 3 Füllvorgang
Relais Generator
Stromversorgungsanschluss Generator
Hilfsrelais Spülen und Füllen
Boilerheizwiderstand
Heizwiderstand Trocknen
Heizwiderstand Spülen
Heizwiderstand Tank 2
Heizwiderstand Tank 1
Mikroschalter Zyklusende
Thermostat zum Spülen
Thermostat kessel
Zeitschaltuhr Spülgang
Start-Timer
Trocknungs-Timer
Rekuperator-Timer
Transformator
Trocknungsthermostat
Grenzthermostat Boiler
Thermostat Tank 1/2
Elektroventil Füllen und Spülen
Schalttafelventilator
Elektroventil Dampfkondensation
Elektroventil Tankfüllung
Hauptelektroventil
Ausgangselectroventil

FARBEN

Blau
Gelb
Gelb/grün
Weiß
Grau
Braun
Schwarz
Orange
Rot
Rosa
Grün
Violett

ITALIANO

Punti di collegamento con R
Punti di collegamento 160/200 senza asciugatura né condensatore
Condensatore
Rele ausiliario risciacquo
Contattore pompa lavaggio 1/2/3
Contattore pompa prelavaggio
Contattore motore estrattore
Contattore motore asciugatura
Contattore avanzamento 1/2
Contattore motore recuperatore
Contattore riscaldamento boiler
Contattore resistenza asciugatura
Contattore riscaldamento risciacquo
Contattore riscaldamento serbatoio 2
Contattore riscaldamento serbatoio 1
Rele porta
Dosatore brillantante
Dosatore detersivo
Fusibile
Rele termico motore estrattore
Rele termico pompa lavaggio 1/2/3
Rele termico motore asciugatura
Contattore motore recuperatore
Rele termico motore avanzamento
Microinterruttore risciacquo
Interruttore generale
Microinterruttore lavaggio
Bottone di avvio
Microinterruttore porta risciacquo
Bottone di arresto
Microinterruttore porta prelavaggio
Microinterruttore porta serbatoio 1/2/3
Spia accensione
Spia avvio
Pompa di riempimento e risciacquo
Pompa risciacquo
Pompa lavaggio 1/2/3
Pompa a pressione
Pompa prelavaggio
Motore estrazione vapore
Motore recuperatore
Motore asciugatura
Motore avanzamento
Pressostato risciacquo
Arresto di emergenza
Pressostato prelavaggio
Pressostato lavaggio 1 riscaldamento
Pressostato lavaggio 1 riempimento
Pressostato lavaggio 2 riscaldamento
Pressostato lavaggio 2 riempimento
Pressostato lavaggio 3 riempimento
Rele Generator
Alimentazione generatore
Rele ausiliario risciacquo e riempimento
Resistenza boiler
Resistenza asciugatura
Resistenza riscaldamento risciacquo
Resistenza serbatoio 2
Resistenza serbatoio 1
Microinterruttore finecorsa
Termostato risciacquo
Termostato boiler
Timer risciacquo
Timer avvio
Timer asciugatura
Termostato recuperatore
Trasformatore
Termostato asciugatura
Termostato limitatore boiler
Termostato serbatoio 1/2
Elettrovalvola riempimento e risciacquo
Ventilatore quadro elettrico
Elettrovalvola condensazione vapore
Elettrovalvola riempimento serbatoio
Elettrovalvola generale
Elettrovalvola uscita

COLORE

Blu
Giallo
Giallo/verde
Bianco
Grigio
Marrone
Nero
Arancio
Rosso
Roseo
Verde
Viola

Z313070000

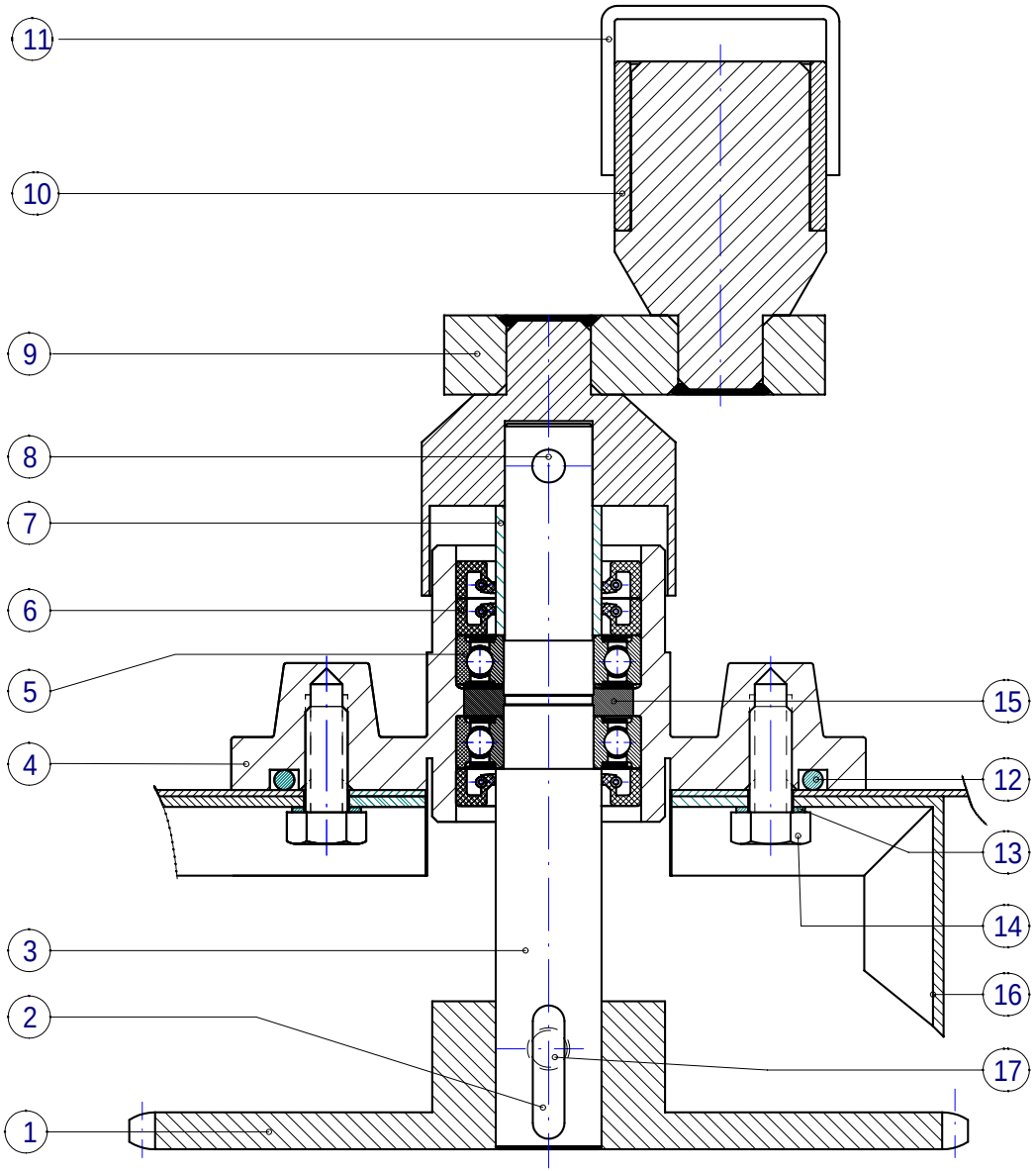

Nº	Pieza	Cant.	Material	Nº Clasificacion	Acabado	
17	Varilla roscada	1	Hierro	Z-105051		HB-16546
16	Refuerzo soporte	1	AISI 304	Z-270335		HC-16709
15	Grasa KRAFFT	1	Molykote-Longterm W-2	Ref.:41502		
14	Tornillo exagonal M.8x20	4	AISI 304	Q-012053		DIN 933
13	Arandela muelle A.8	4	AISI 304	Q-262050		DIN 127
12	Junta tórica Ø105.28xØ94.62xØ5.33	1	E.P.D.M.	Q-307045	Color:Negro	
11	U motriz	1	AISI 304	Z-275053		HC-16750
10	Casquillo	1	Bronce 555	Z-105027		HB-16421
9	Placa unión completa	1		Z-275022		HB-17129
8	Pasador cónico	1	AISI 304	Z-105026		HB-16550
7	Casquillo distanciador	1	AISI 304	Z-105055		HB-16620
6	Reten radial 20x35x7	3		Z-105016		HB-16555
5	Rodamiento 6003-2RS	2	Inoxidable	Z-105017		HB-16557
4	Soporte rodamientos	1	Latón	Z-275021	Cromado	HC-16683
3	Eje	1	AISI 304	Z-275011		HB-17082
2	Chaveta eje	1	Acero St 60	Z-105014		HB-16426
1	Pi-on	1	Acero FE-50			
	Montaje rodamientos arrastre compacto			Z-275080		

Nº	Modificacion	Propuesta de	Fecha

Tolerancias generales

<5±		50–100±	:
5–25±	:	>100±	
25–50±	:	○±	

	Firma	Fecha
Dibujado	Iria	2000-3-17
Proyectado		
Comprobado		

FAGOR

Fagor Industrial,Koop.Elk, Mugatua

Mecanizado superficial

Escala

1:1

LAVAVAJILLAS COMPACTO

Plano hau ez daiteke erabili ez berrizta gure baimenitz gabe

Plano numero

HC-17217

Sustituye al Nº

Sustituido por