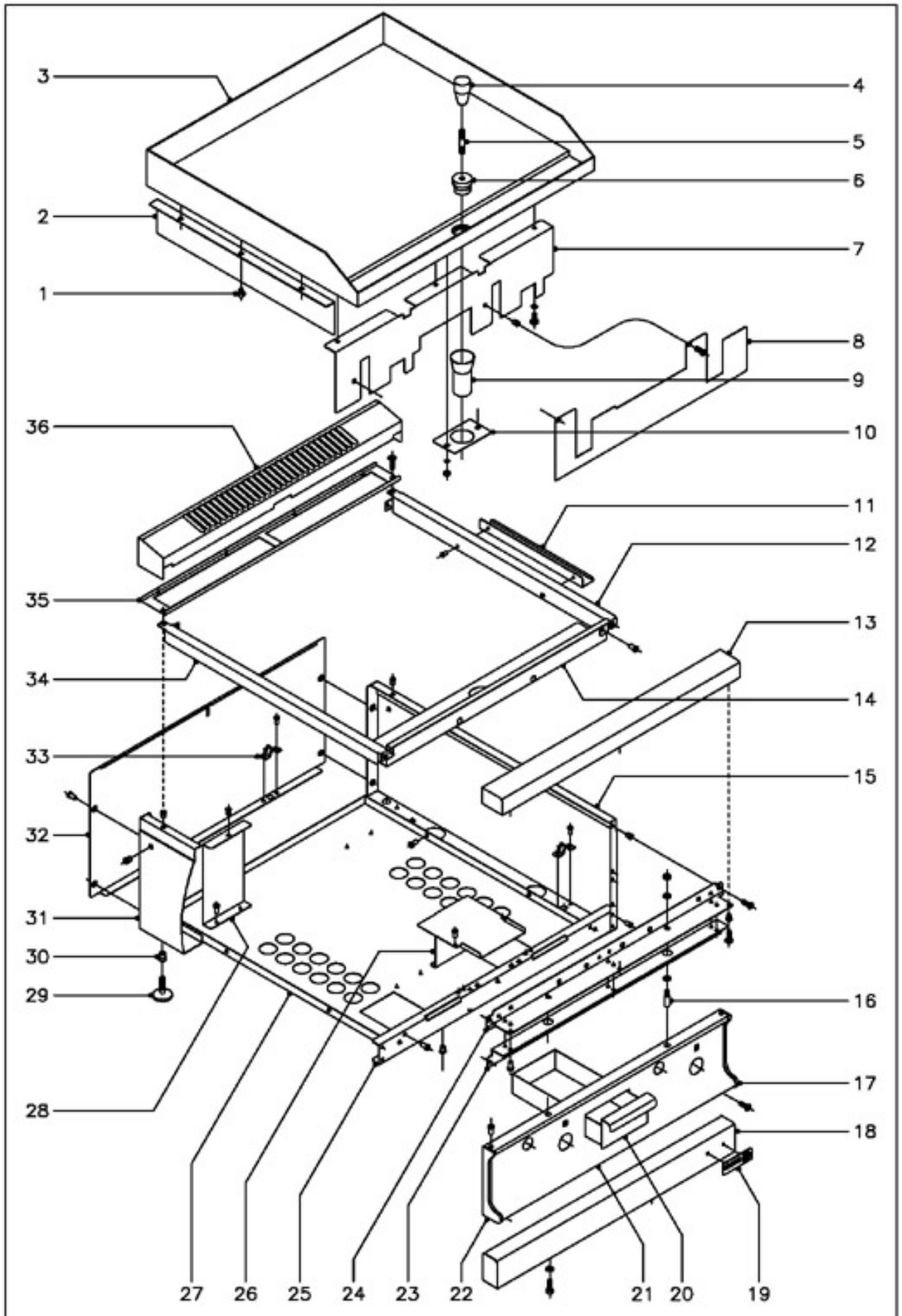

1	R165414
2	R792603
3	R785416
3	R795416
3	R785420
3	R795422
3	R785418
3	R795420
3	R795418
4	S116122
5	R619913
6	R619912
7	R782607
7	R792616
	Q262040
	Q012041
8	R782608
8	R792617
	Q221342
	Q152004
9	R795006
10	R152607
	Q262040
	Q162040
11	R792605
	Q419005
12	R792806
13	X315400
13	U745407
	Q221342
	Q152004
14	R782606
14	R792612
	Q419005
15	U732802
16	Q151336
	Q302022
	Q162040
17	U452804
	Q419005
18	R962800
18	R972800
	Q302022
	Q012031
19	U262806
	Q221023

20	R792606
21	R782805
21	R792810
	Q152004
22	U452805
	Q419005
23	X312630
23	U742620
	Q419005
	Q221342
	Q152004
24	X312600
24	U742607
	Q221342
	Q152004
25	U722603
25	R982600
	Q419005
26	R792609
	Q419005
27	R782803
27	R792805
	Q419005
28	R782600
	Q221342
	Q419005
29	Z200105
30	Q221345
31	U732801
32	U722803
32	U732803
	Q419005
33	X010503
	Q419007
34	R792804
35	R782601
35	R792610
	Q012031
	Q221342
36	X315425
36	U745425

N plano	Firma	Fecha	Aparato	MUEBLE	Lamina	
C-1250		12-2002	FRY-TOP FTG-705, FTG-710		1	Fagor Industrial S.Coop. FAGOR Otate

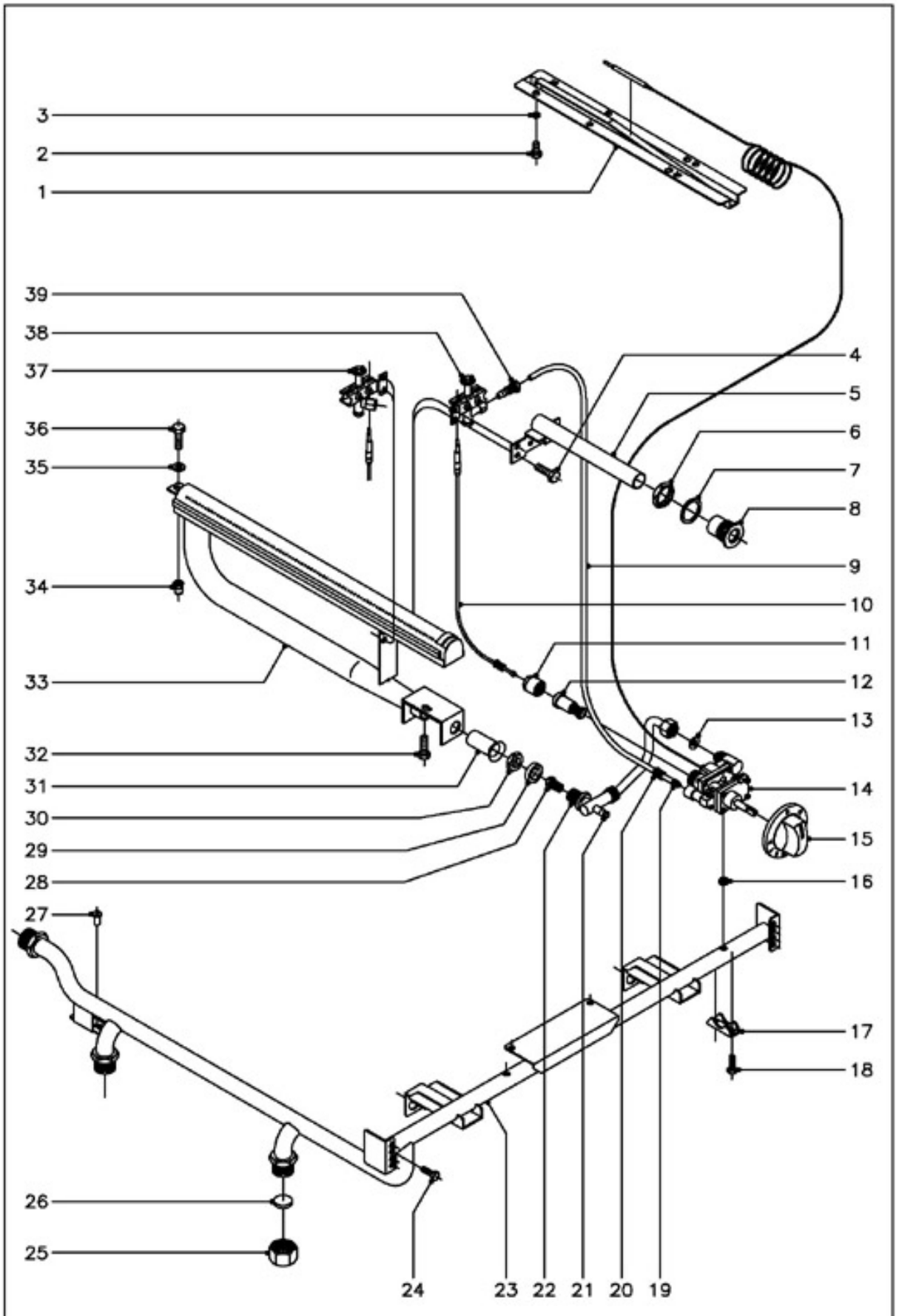

N plano C-1251	Firma	Fecha 12-2002	Aparato PARTE FUNCIONAL GAS FRY-TOP FTG-705, FTG-710
Lamina 2	Fagor Industrial S.Coop. Oñate	FAGOR	

1	R162630
2	Q012041
3	Q262040
4	Q012031
5	R165011
6	Q221324
7	Q306027
8	S112804
9	R785012
9	R795016
10	U222130
11	6002706
12	6002705
13	Q306026
14	R782130
15	R202106
16	Q307034
17	Z982018
18	Q151317
19	X205028
20	U195009
21	Q153002
22	R785013
22	R785004
23	R785022
23	R795025
24	Q012031
25	U635008
26	Q306051

27	Q419005
28	R422400
28	9429500
28	R792400
29	Q301323
30	Q223019
31	U325707
32	Q012032
33	R795700
34	Q221342
35	Q302022
36	Q012031
37	U322118
38	U322118
	U442138
	U442137
39	U134323

		BUTANO - PROPANO
28	R422400	Tobera quemador Ø1,25
37y38	U442138	Inyector piloto Ø0,25
		GAS NATURAL
28	9429500	Tobera quemador Ø1,90
37y38	U442137	Inyector piloto Ø0,40
		GAS VILLA
28	R792400	Tobera quemador Ø4,00
37y38	U442138	Inyector piloto Ø0,25

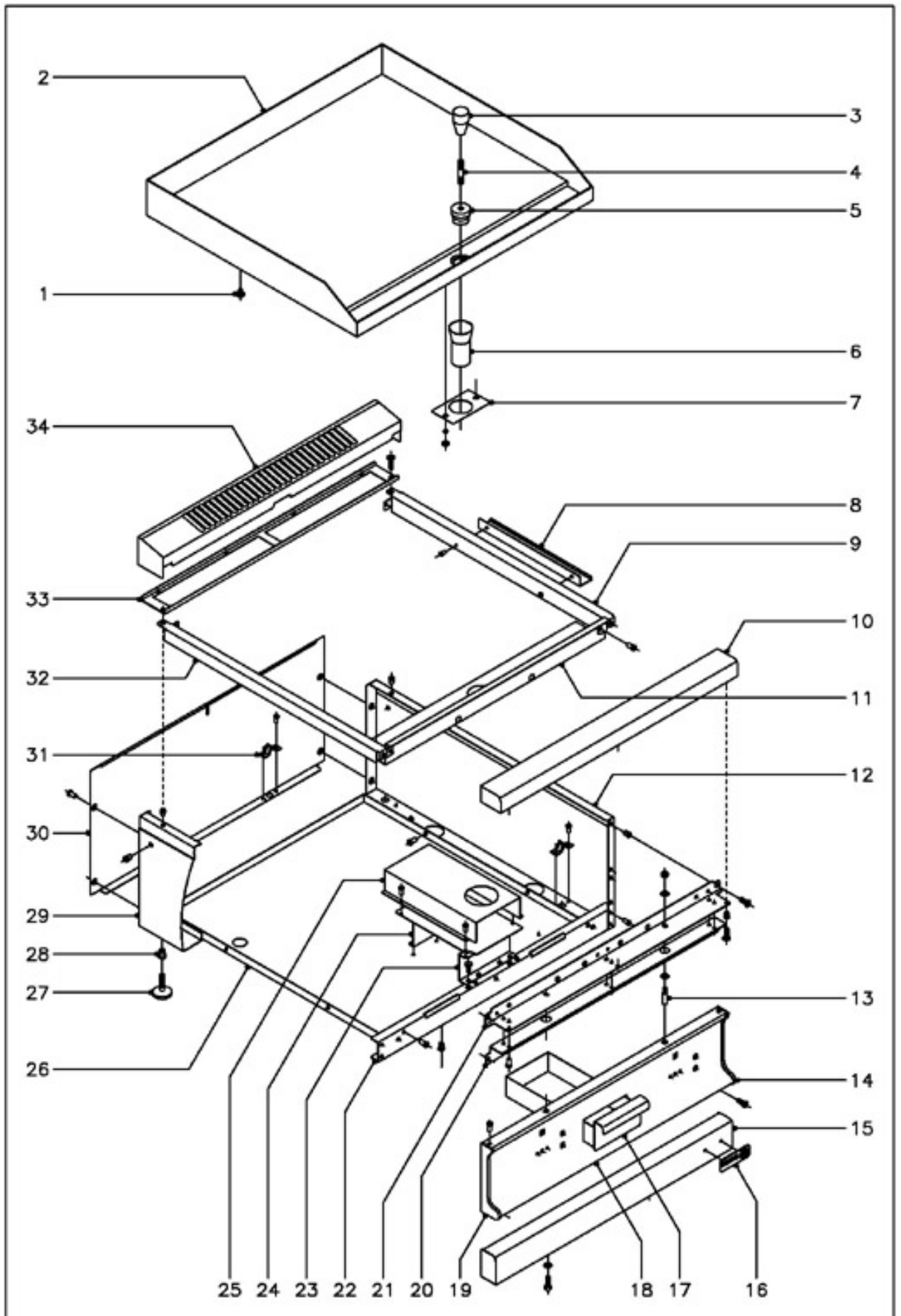

N plano C-1252	Firma	Fecha 12-2002	Aparato MUEBLE FRY-TOP FTE-705, FTE-710
Lamina 3	Fagor Industrial S.Coop. FAGOR Onate		

1	R165414
2	R885416
2	R895416
2	R885420
2	R895422
2	R885418
2	R895420
2	R895418
3	S116122
4	R619913
5	R619912
6	R795006
7	R152607
	Q262040
	Q162040
8	R792605
	Q419005
9	R792806
10	X315400
10	U745407
	Q221342
	Q152004
11	R782606
11	R792612
	Q419005
12	U732802
13	Q151336
	Q302022
	Q162040
14	U452804
	Q419005
15	R962800
15	R972800
	Q302022
	Q012031
16	U262806
	Q221023
17	R792606
18	R882800
18	R892800
	Q152004

19	U452805
	Q419005
20	X312630
20	U742620
	Q419005
	Q221342
	Q152004
21	X312600
21	U742607
	Q221342
	Q152004
22	U722603
22	U732601
	Q419005
23	R892603
	Q221342
	Q012031
24	R892604
	Q419005
25	R892605
	Q419005
26	R962601
26	R972600
	Q419005
27	Z200105
28	Q221345
29	U732801
30	U722803
30	U732803
	Q419005
31	X010503
	Q419007
32	R792804
33	R782601
33	R792610
	Q012031
	Q221342
34	X315425
34	U745425

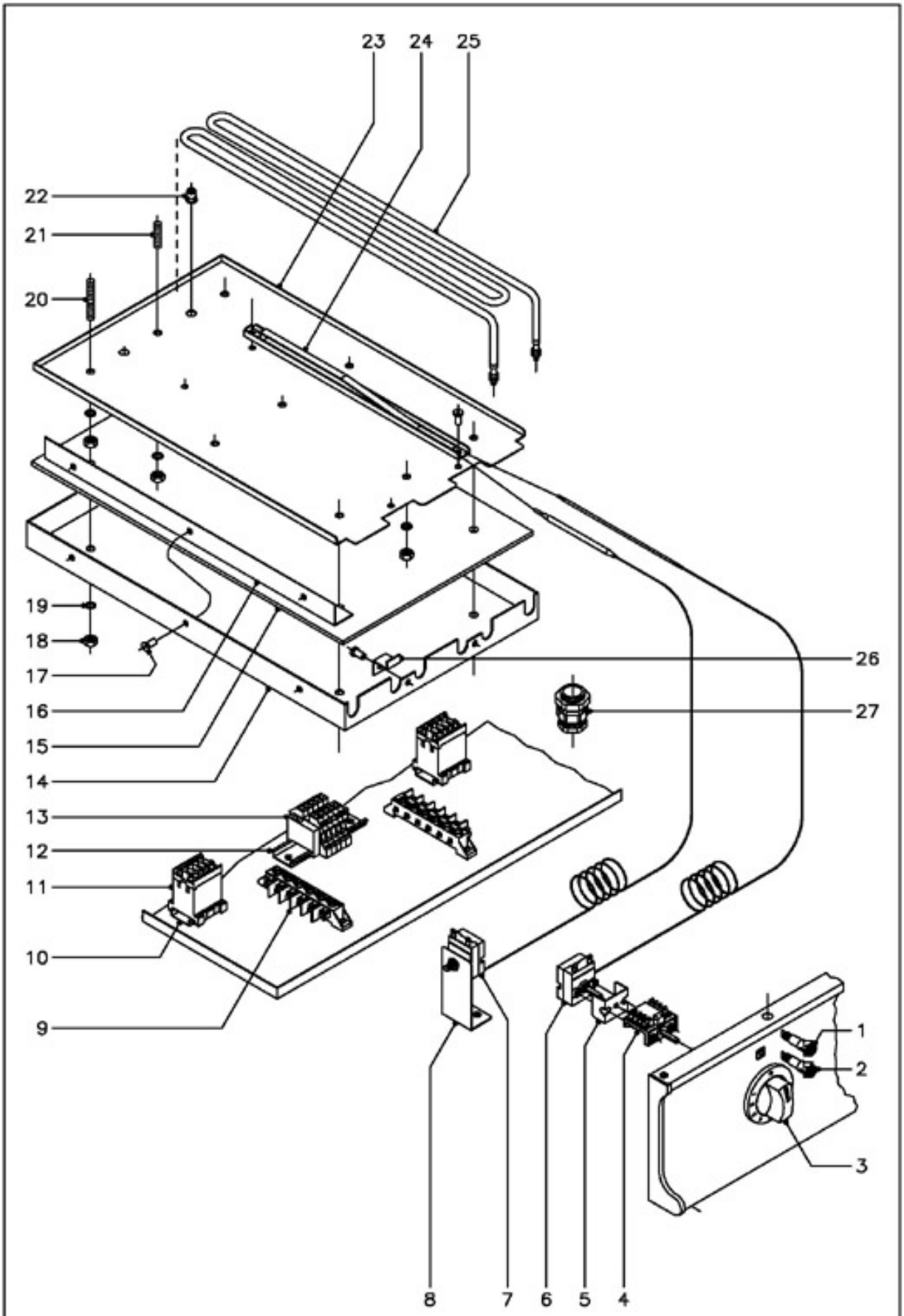

1	R693055
2	R693056
3	U673017
	Q281000
4	X163007
5	X313001
6	X153000
7	R612103
8	R572607
9	R253044
10	Z123018
11	Z213007
12	R663055
13	P453025
	Z263302
	P453026
	Z263303
14	R882600
14	R892600
15	R885410
15	R895410
16	R892602
17	Q419005
18	Q162050
19	Q262050
20	Q131557
21	Q131555
22	Q221343
23	R882602
23	R892606
24	R592630
	Q419005
25	R893000
26	U615409
	Q419005
27	R013022
27	R023013

N plano	Firma	Fecha	Aparato	Lamina	
C-1253		12-2002	PARTE FUNCIONAL ELECTRICA FRY-TOP FTE-705, FTE-710	4	Fagor Industrial S.Coop. FAGOR Dibts