	TABLE	REV
	KI9116	02

CONDENSA VAP. K14/A

STEAM CONDENSER K14/A

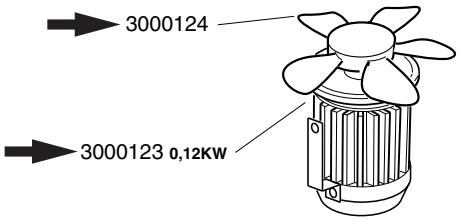

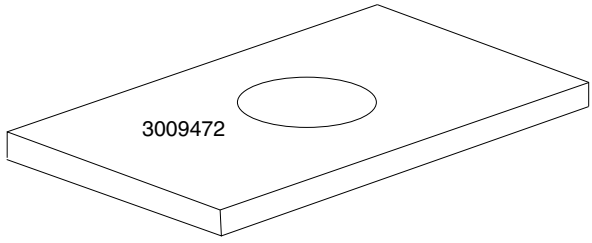

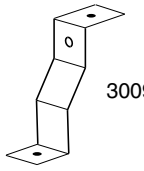

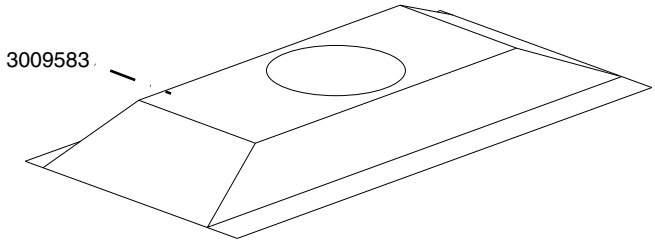

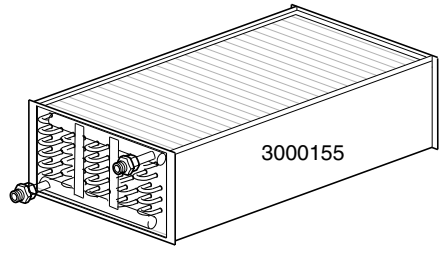

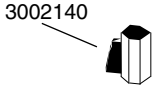

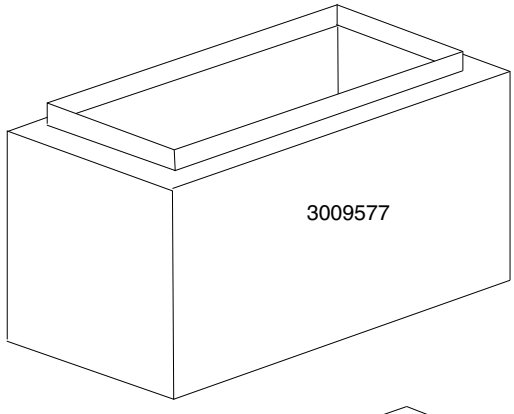

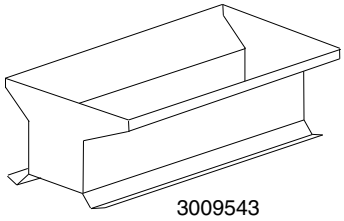

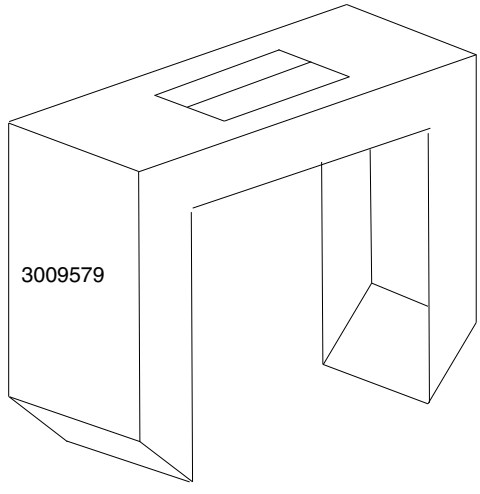

STEAM CONDENSER K14/A

TABLE KI9116

CODE	DESCRIPTION	CODE	DESCRIPTION
2000093	Single solenoid valve		
3000123	0,12 Kw 2P motor 230/400 V		
3000124	MV impeller fan		
3000155	Heating recovery battery		
3002140	F/F 1/2" tap		
3009472	Cover with hole		
3009543	Suction group		
3009551	Motor holder		
3009573	Complete chemney		
3009577	Complete body		
3009579	Jet top		
3009583	Steam condenser base		