Catalogue pieces detachées
LINEAR 60 PRC

1 - AVANCEMENT
2 - ARBRE ENTREE'
3 - CONVOYEUR
4 - CONVOYEUR
5 - ECONOMISEUR
6 - GROUPE FIN DE COURSE
7 - COMPOSANTS LAVAGE
8 - CUVE LAVAGE
9 - CARROSSERIE
10 - PORTE CONTREBALANCEE'
11 - GROUPE PRE-RINÇAGE
12 - CUVE RINÇAGE
13 - COMPOSANTS RINÇAGE
14 - COMPOSANTS SURCHAUFFEUR
15 - COMPOSANTS SURCHAUFFEUR
16 - LIMITEUR DE COUPLE
17 - CARROSSERIE
18 - PORTE CONTREBALANCEE'
19 - PANNEAU DE CONTROLE
20 - PANNEAU DE CONTROLE
21 - BOITE ELECTRIQUE AUXILIAIRE
22 - CONDENSEUR DE BUEES

lamber	GRUPPO TRAINO - AVANCEMENT MOTOR TOW - MOTOR SCHLEPPEN	MOD. **LINEAR**	TAV. **1 A** ED. 09/99

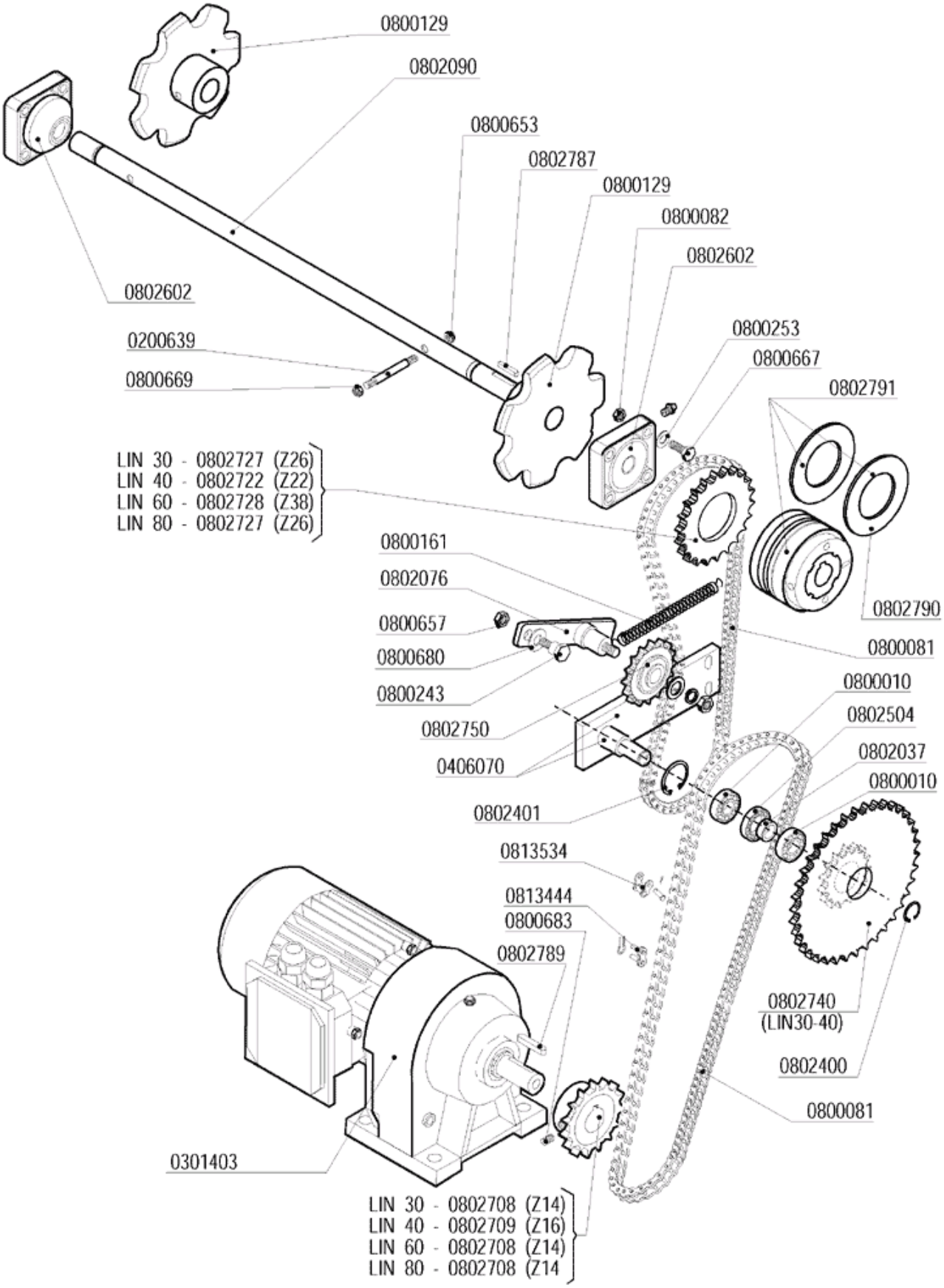

lamber	ALBERO ENTRATA - ARBRE ENTREE' ENTRY TOW - EINGANG ANTRIEB	MOD. **LINEAR**	TAV. **2 A** ED. 09/99

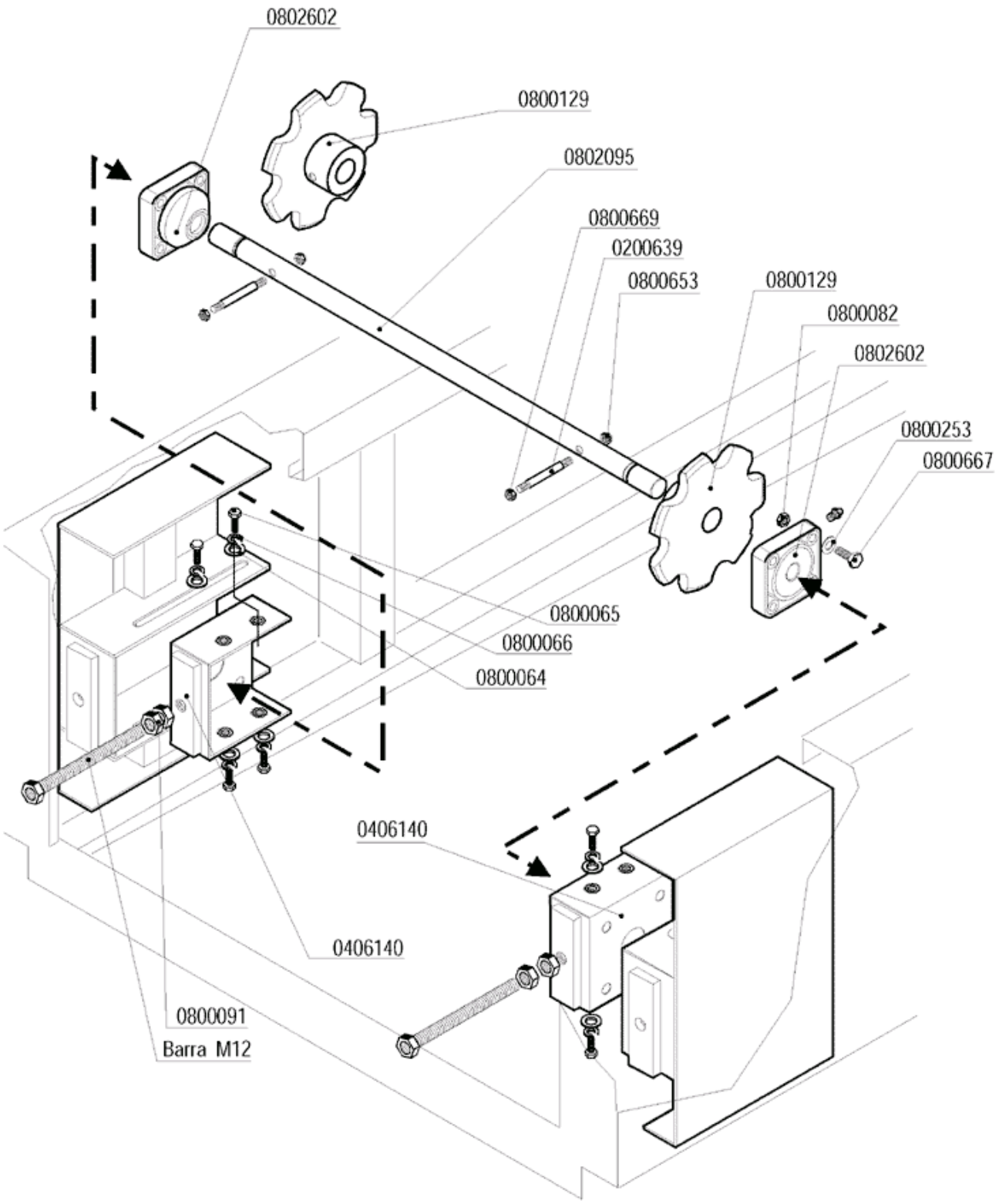

lamber	NASTRO - CONVOYEUR CONVEYOR - BAND	MOD. **LINEAR**	TAV. **3 A** ED. 09/99

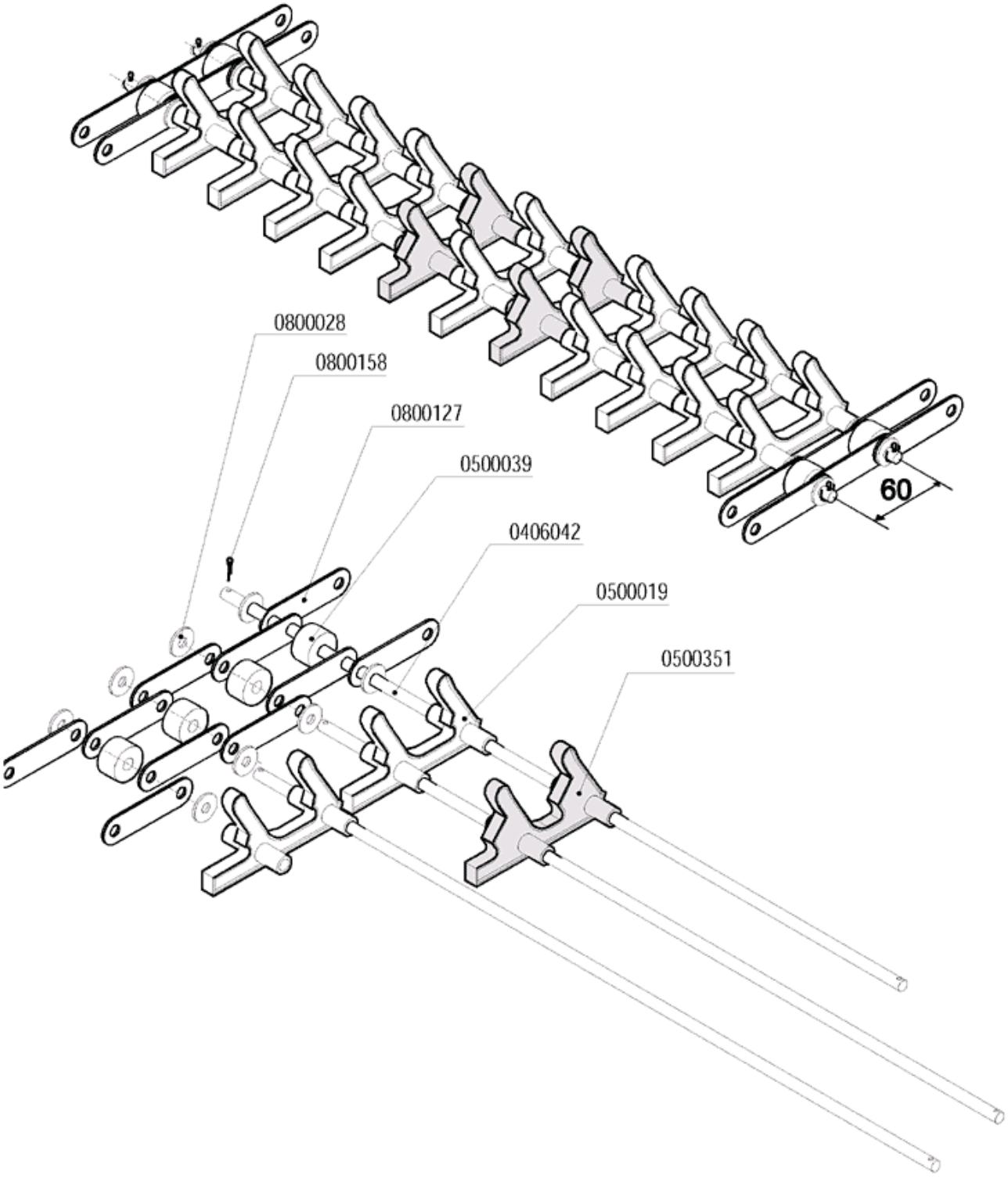

lamber	NASTRO - CONVOYEUR CONVEYOR - BAND	MOD. **LINEAR**	TAV. **3 B** ED. 01/00

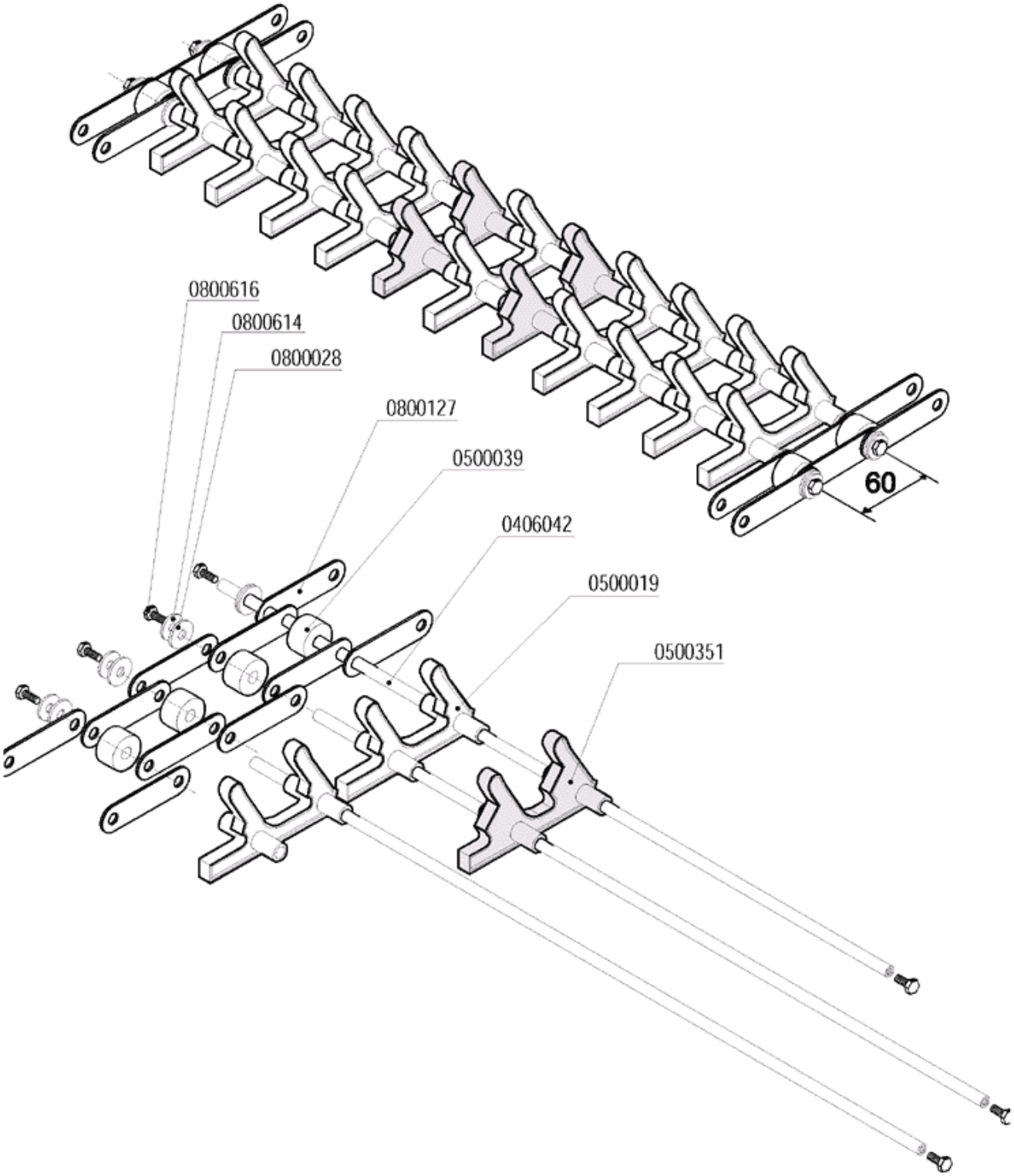

lamber	ECONOMIZZATORE - ECONOMISEUR ECONOMISER - SPARSCHALTER	MOD. **LINEAR**	TAV. **4 A** ED. 09/99

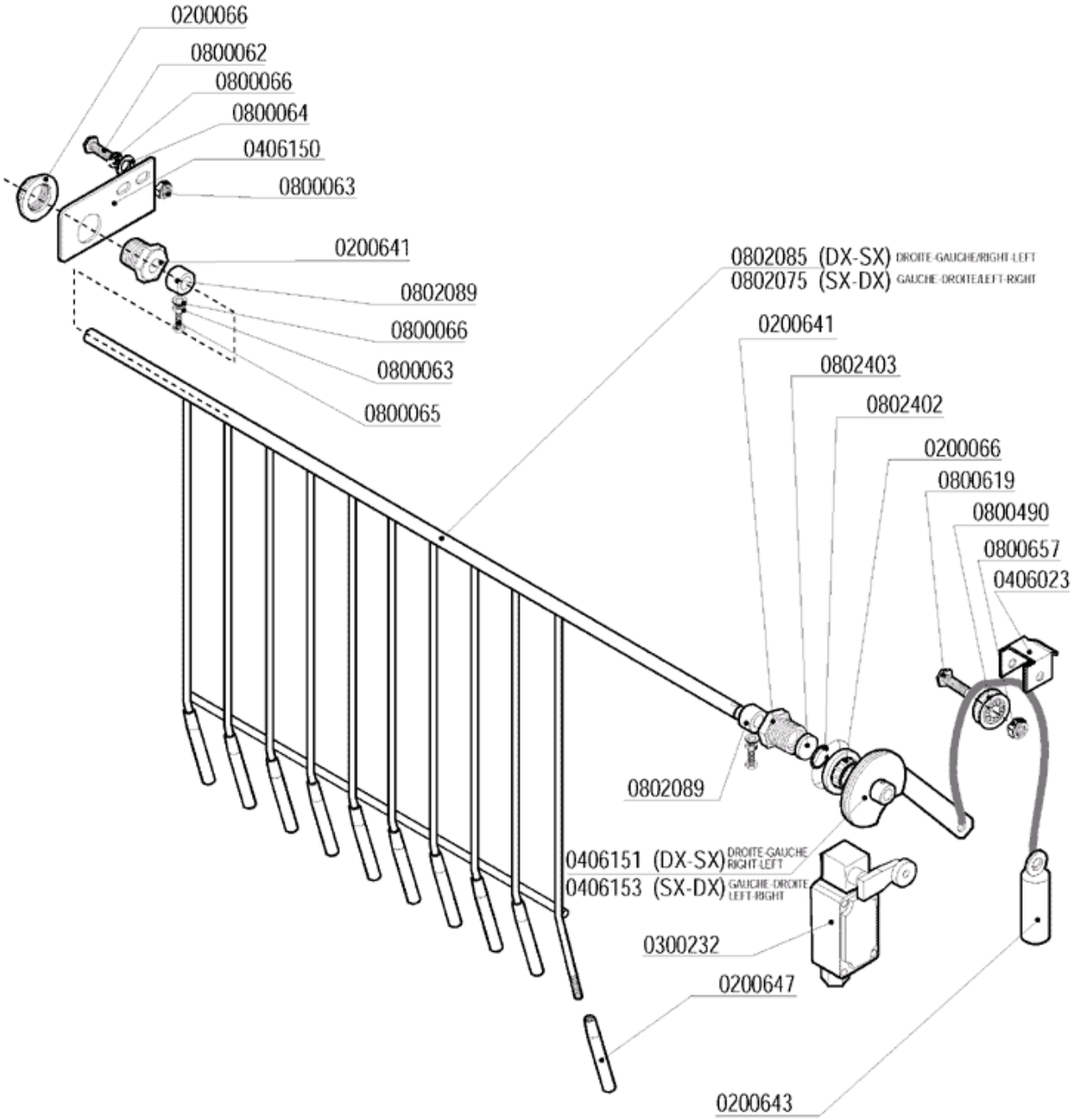

lamber	GRUPPO FINECORSA - GROUPE FIN DE COURSE END RUN SWITCH - ENDSCHALTER	MOD. **LINEAR**	TAV. **5 A** ED. 09/99

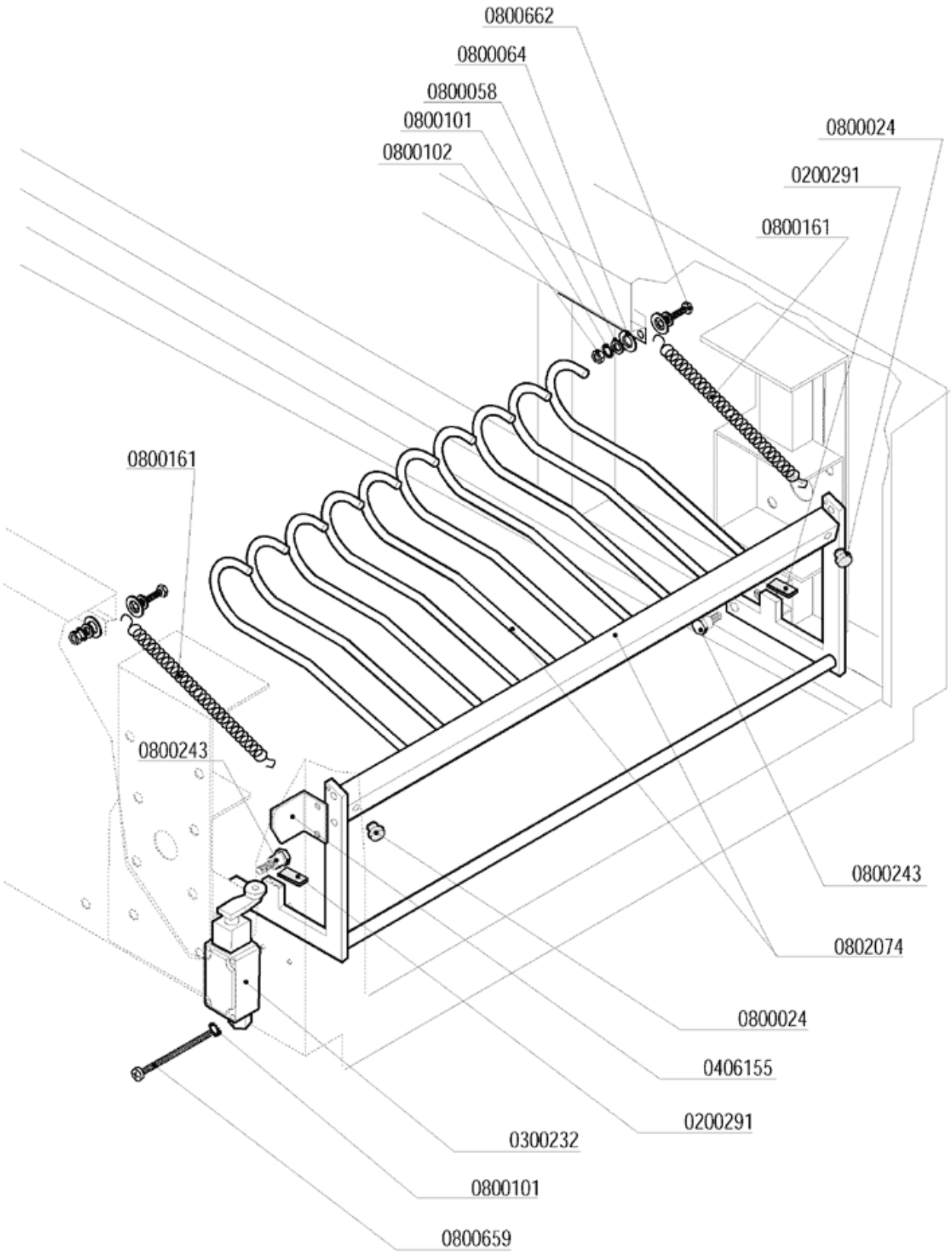

lamber	GRUPPO LAVAGGIO - COMPOSANTS LAVAGE WASHING COMPONENTS - WASCHROHR	MOD. **LINEAR**	TAV. **6 A** ED. 09/99

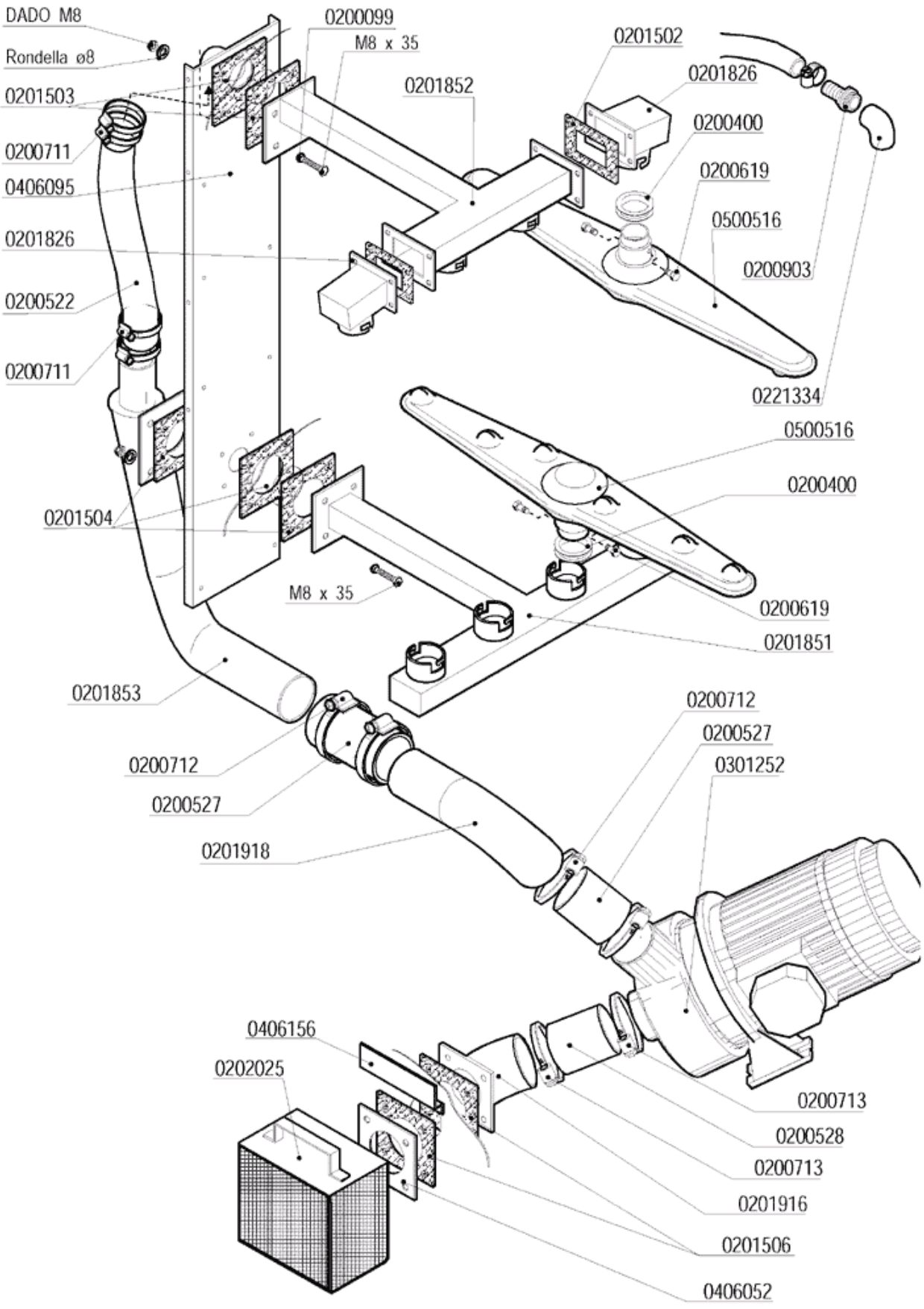

lamber	VASCA LAVAGGIO - CUVE LAVAGE WASH TANK - WASCHTANKROHR	MOD. **LINEAR**	TAV. **7 A** ED. 09/99

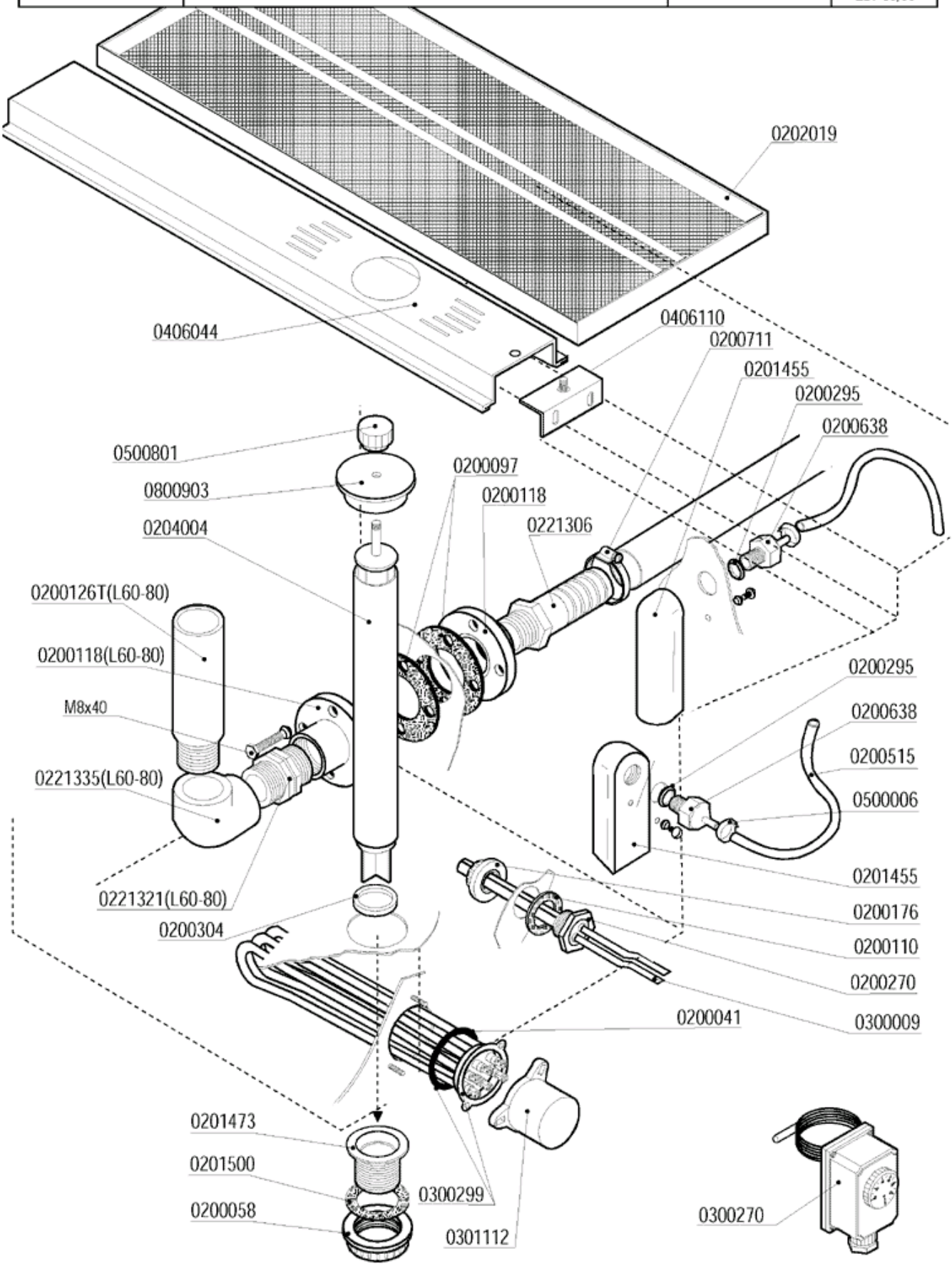

lamber	CARROZZERIA - CARROSSERIE HOOD - KARROSSERIE	MOD. **LINEAR**	TAV. **8 A** ED. 09/99

LAVAGGIO - LAVAGE - WASHING - WASCHUNG
1000 mm

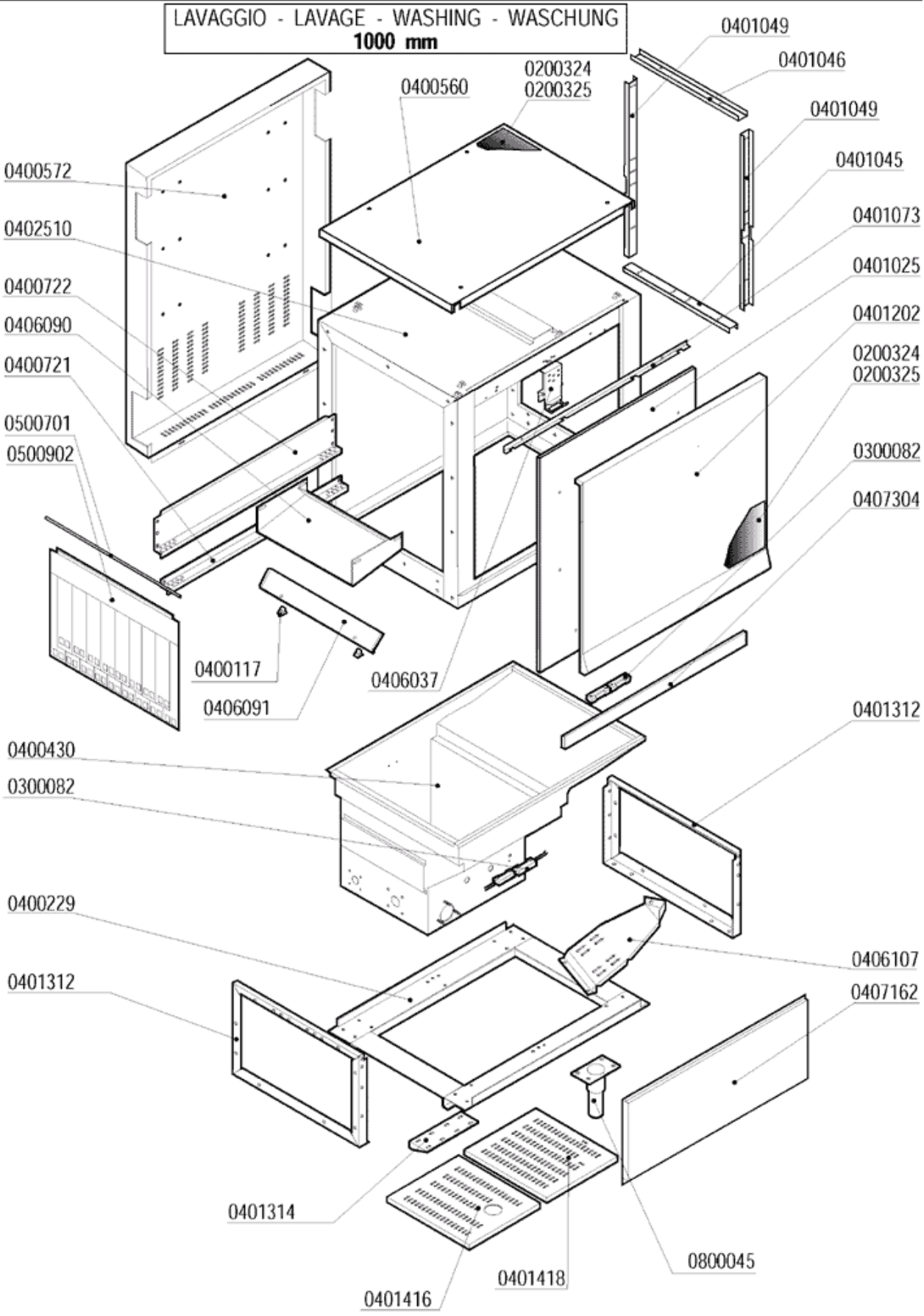

lamber	SPORTELLO CONTROBILANCIATO PORTE CONTREBALANCEE' COUNTERBALANCDE DOOR - GEWICHTTÜR	MOD. **LINEAR**	TAV. **9 A** ED. 09/99

LAVAGGIO - LAVAGE - WASHING - WASCHUNG
1000 mm

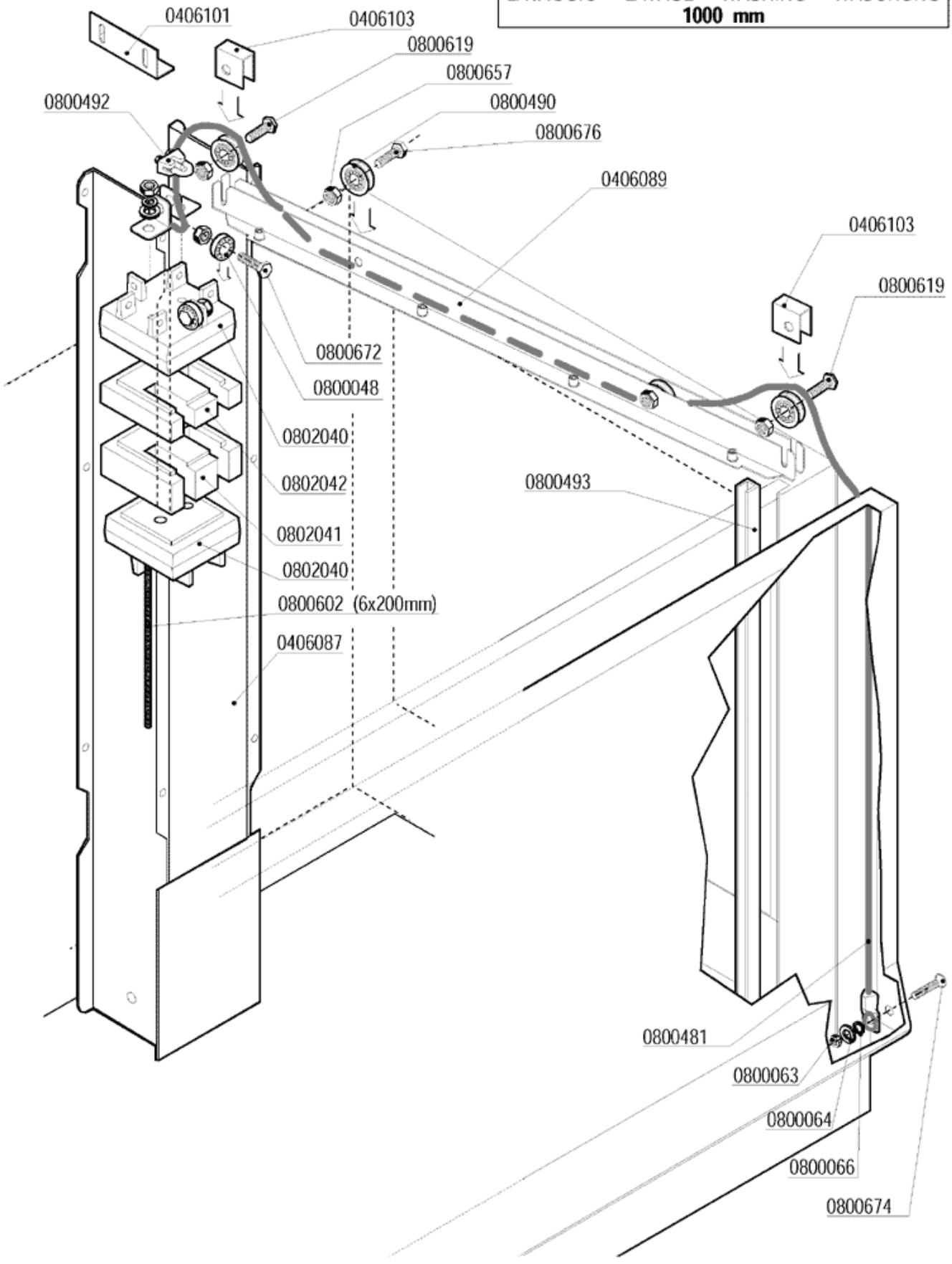

lamber	GRUPPO PRE-RISCIACQUO/GROUPE PRE-RINÇAGE PRE-RINSE COMPONENTS/VOR-NACHSPÜLROHR	MOD. **LINEAR**	TAV. **10 A** ED. 09/99

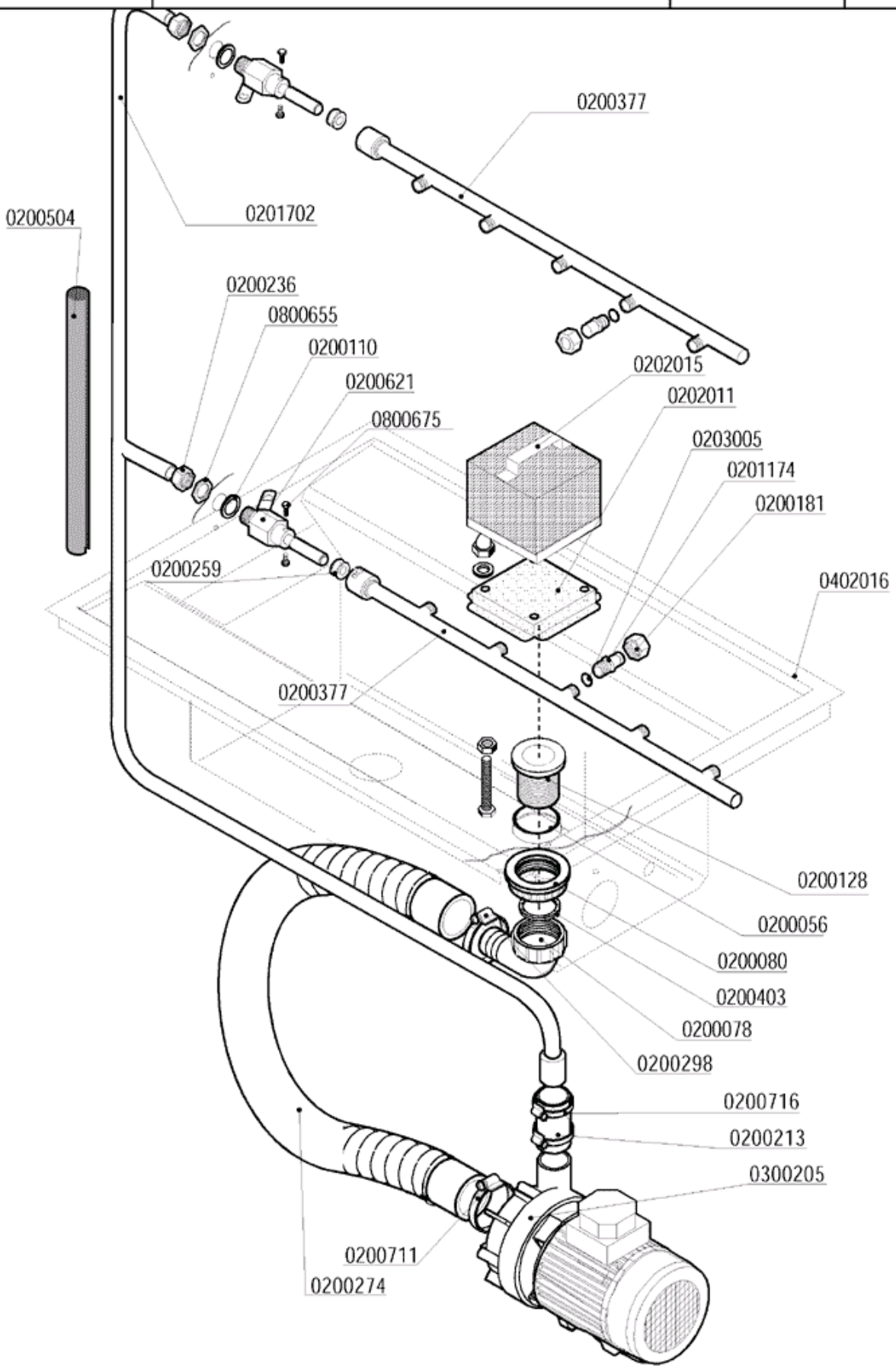

lamber	VASCA RISCIACQUO - CUVE RINÇAGE RINSE TANK COMPONENTS - NACHSPÜLTANKROHR	MOD. **LINEAR**	TAV. **11 A** ED. 09/99

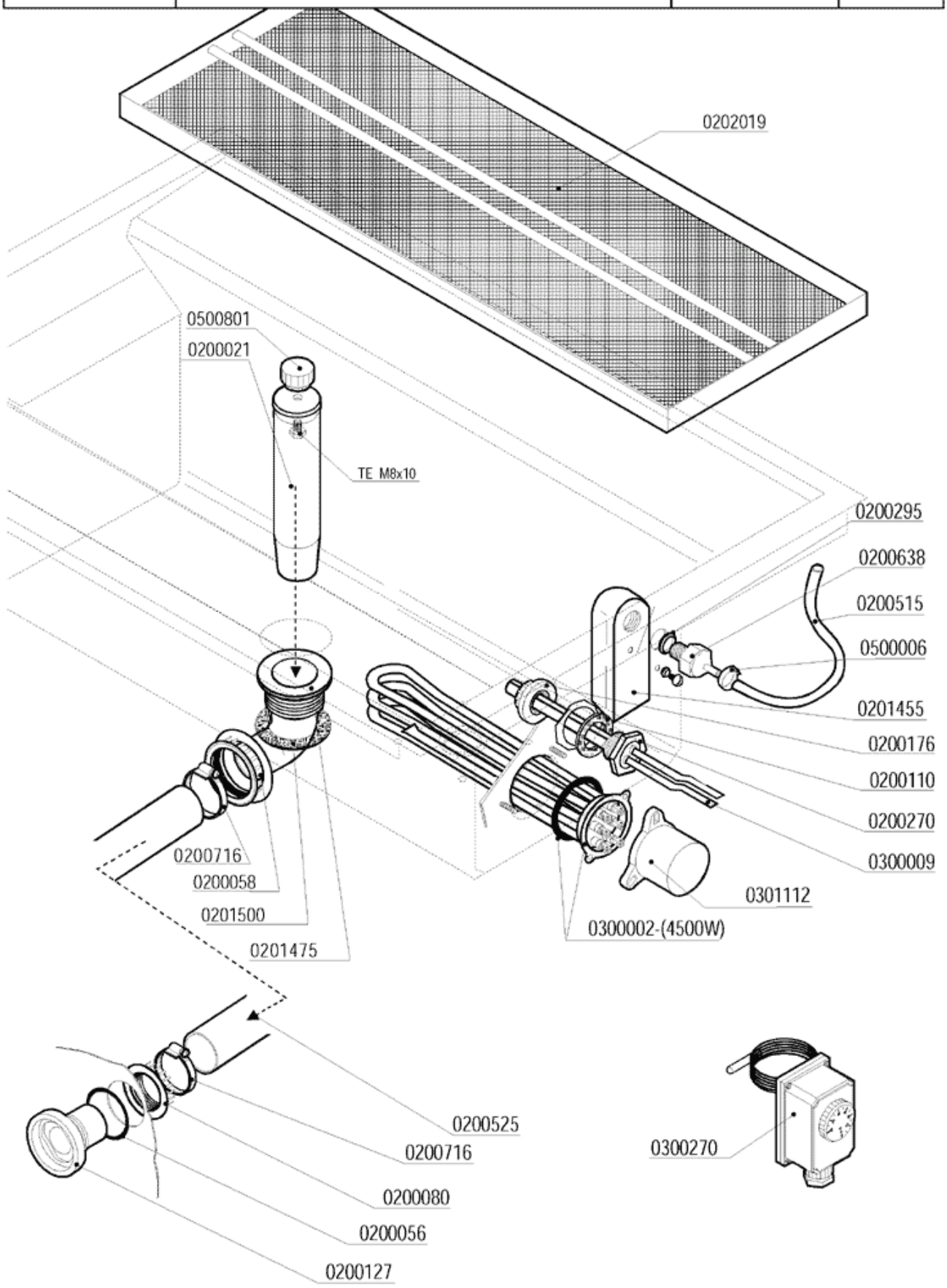

lamber	GRUPPO RISCIACQUO - COMPOSANTS RINÇAGE RINSE COMPONENTS - NACHSPÜLROHR	MOD. **LINEAR**	TAV. **12 A** ED. 09/99

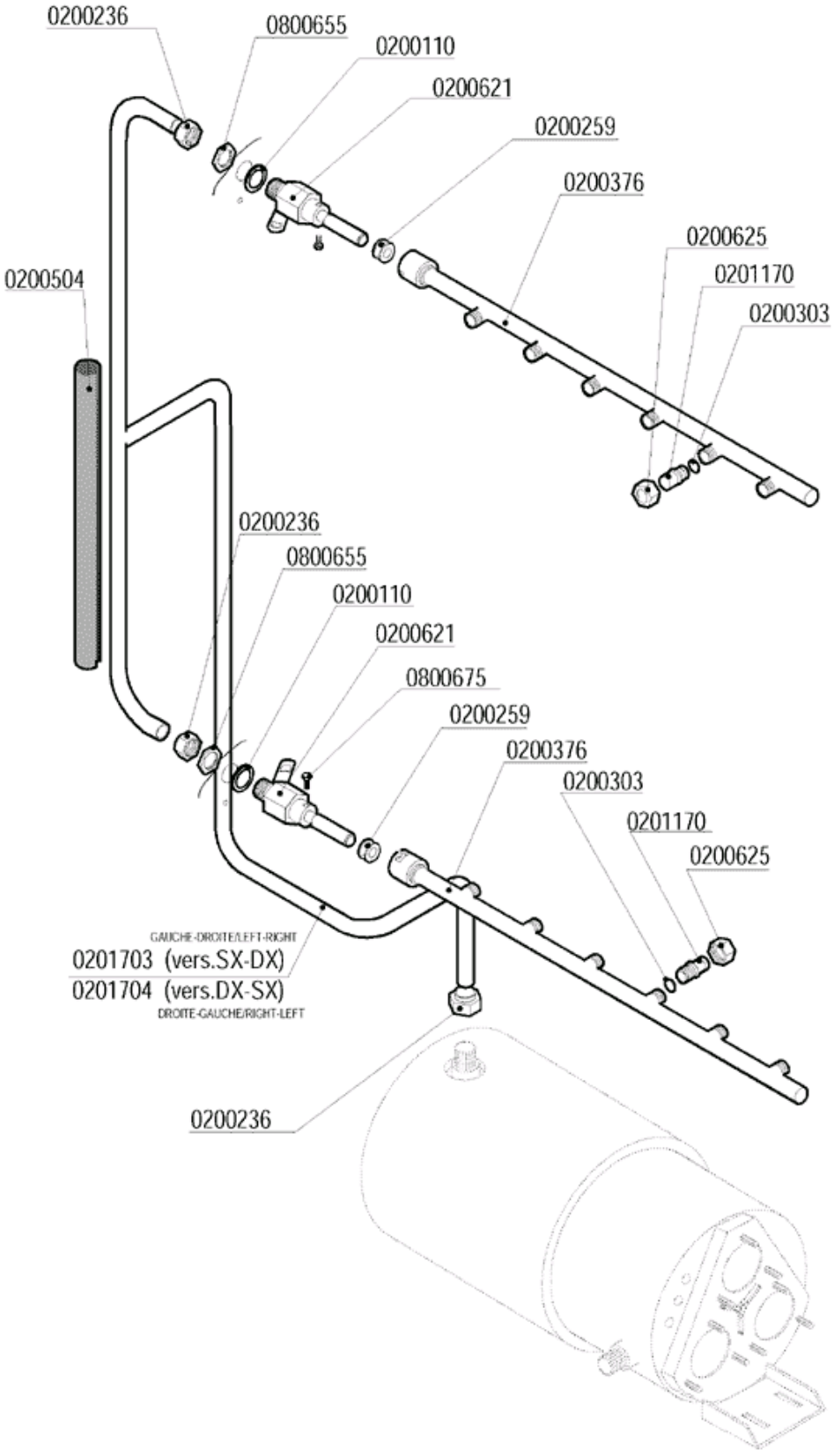

lamber	GRUPPO BOILER - COMPOSANTS SURCHAUFFEUR BOILER COMPONENTS - BOILER KOMPONENTEN	MOD. **LINEAR**	TAV. **13 A** ED. 09/99

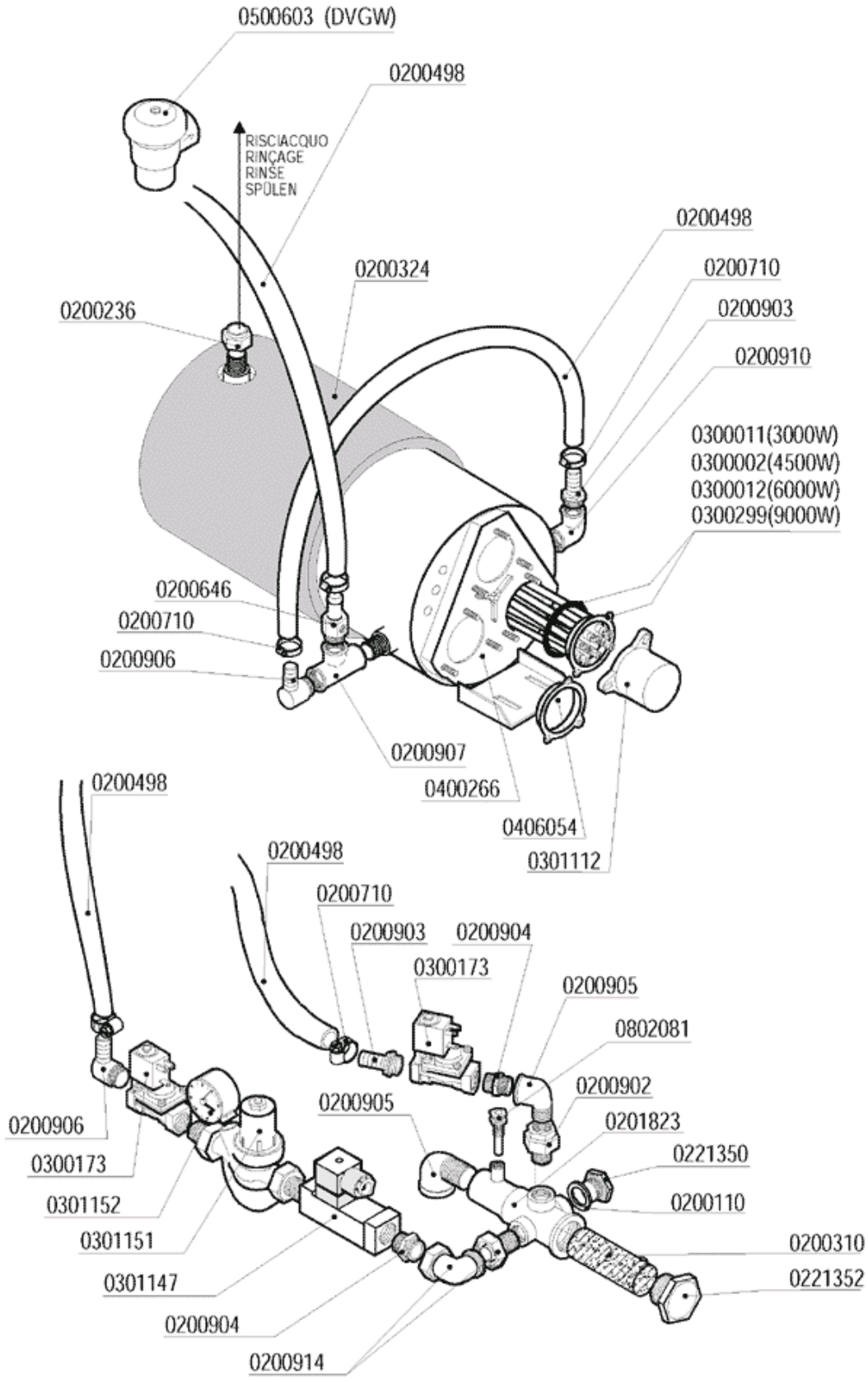

lamber	GRUPPO BOILER - COMPOSANTS SURCHAUFFEUR BOILER COMPONENTS - BOILER KOMPONENTEN	MOD. LINEAR 80	TAV. 14 A ED. 09/99

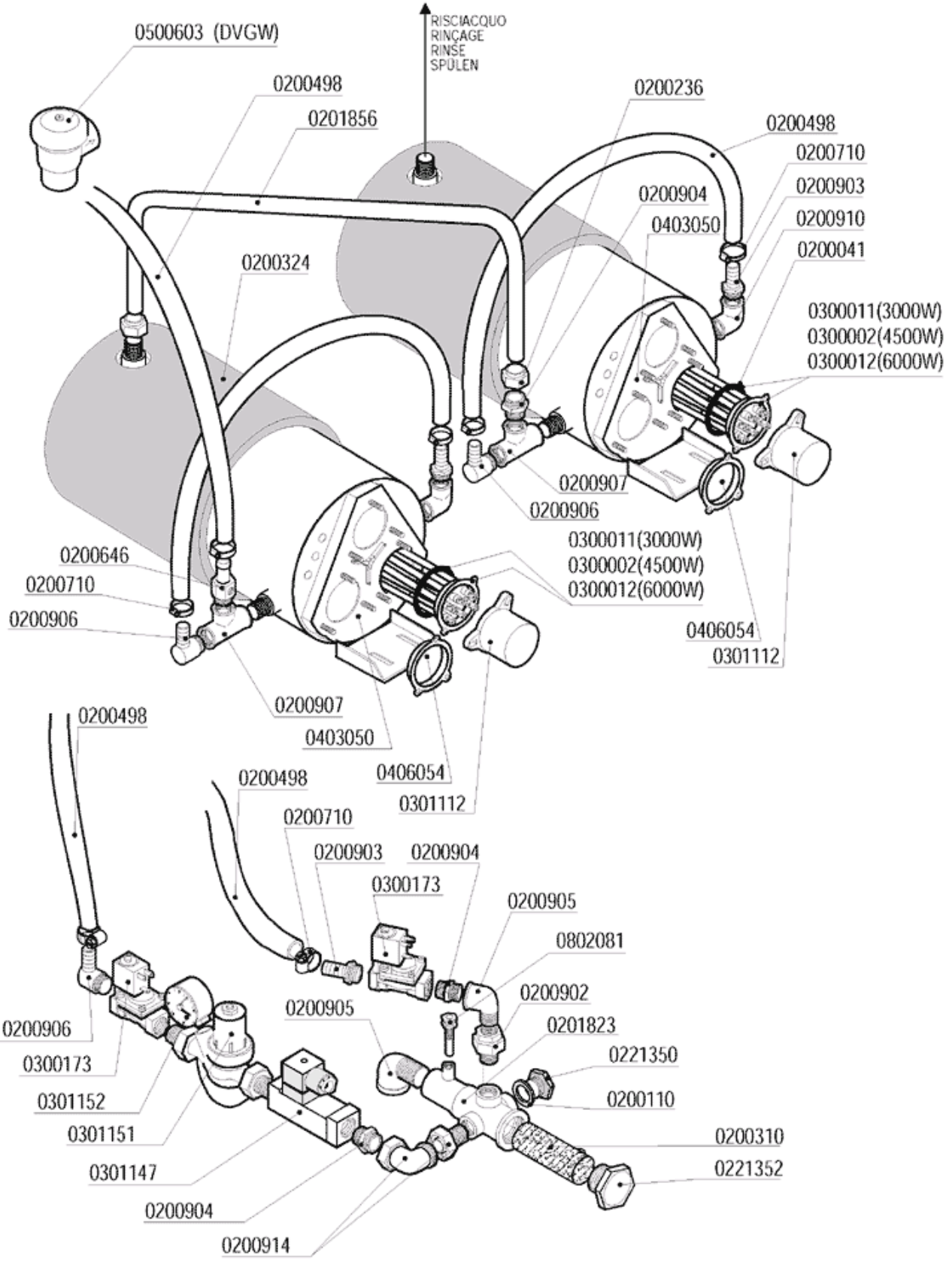

lamber	LIMITATORE DI COPPIA - LIMITEUR DE COUPLE TORQUE LIMITING DEVICE - RUTSCHKUPPLUNG	MOD. **LINEAR**	TAV. **15 A** ED. 03/2000

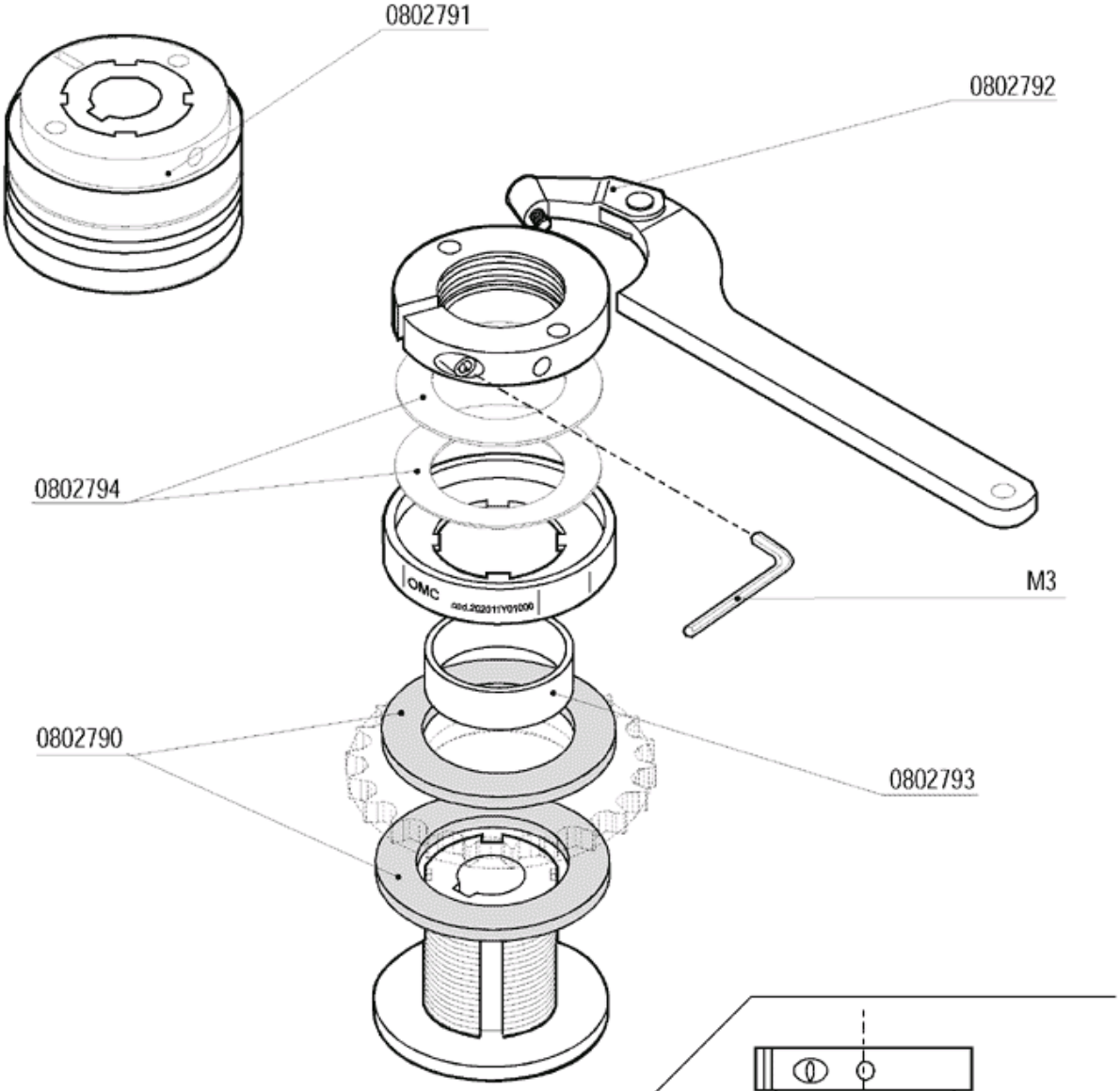

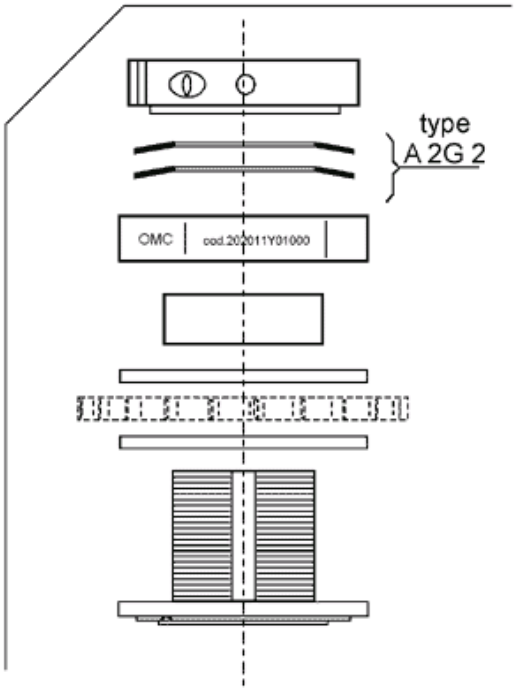

lamber	CARROZZERIA - CARROSSERIE HOOD - KARROSSERIE	MOD. **LINEAR**	TAV. **16 A** ED. 09/00

RISCIACQUO - RINÇAGE - RINSE - NACHSPÜLUNG
600 mm

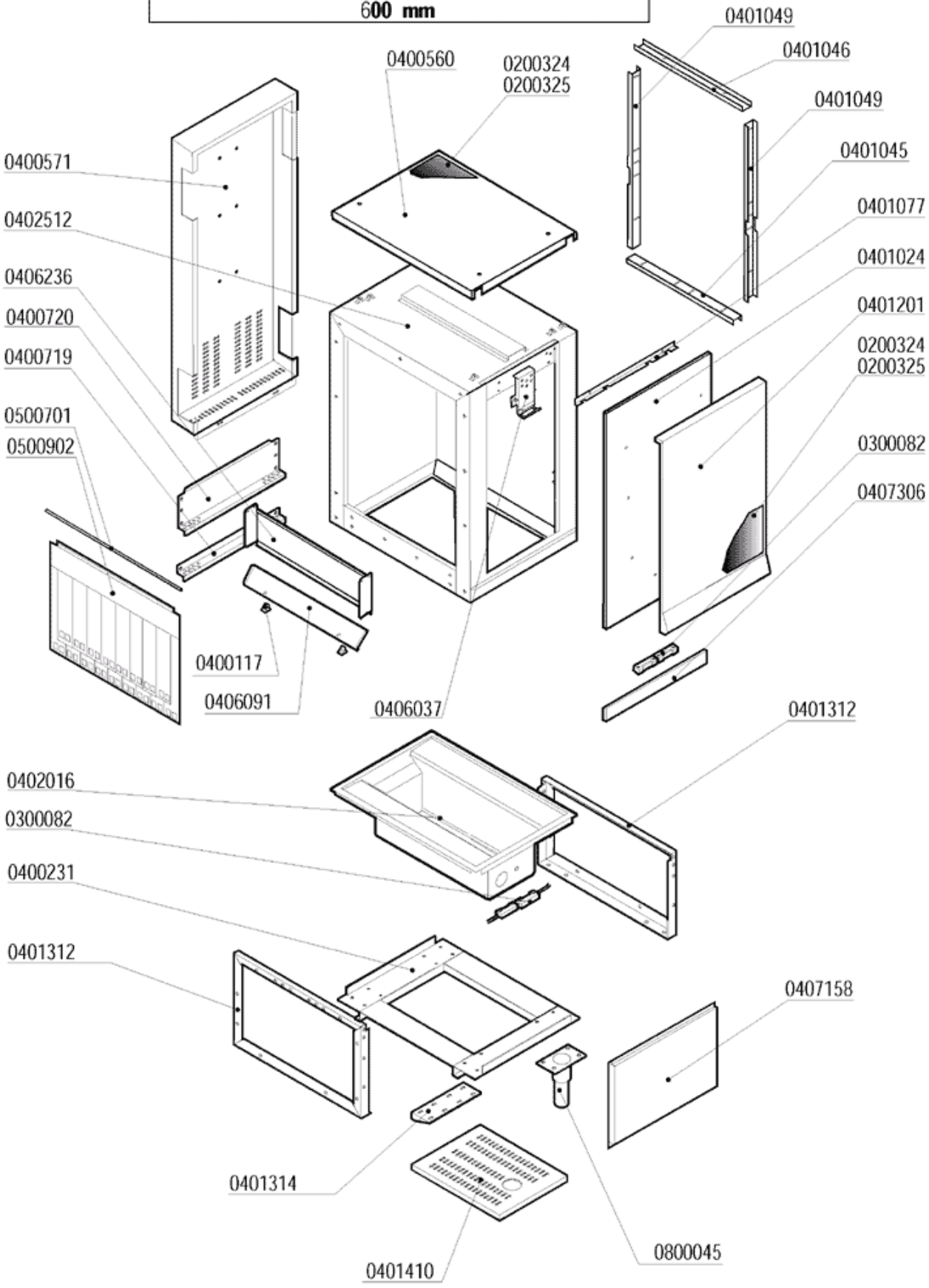

lamber	SPORTELLO CONTROBILANCIATO PORTE CONTREBALANCEE' COUNTERBALANCDE DOOR - GEWICHTTÜR	MOD. **LINEAR**	TAV. **17 A** ED. 09/00

RISCIACQUO - RINÇAGE - RINSE - NACHSPÜLUNG
600 mm

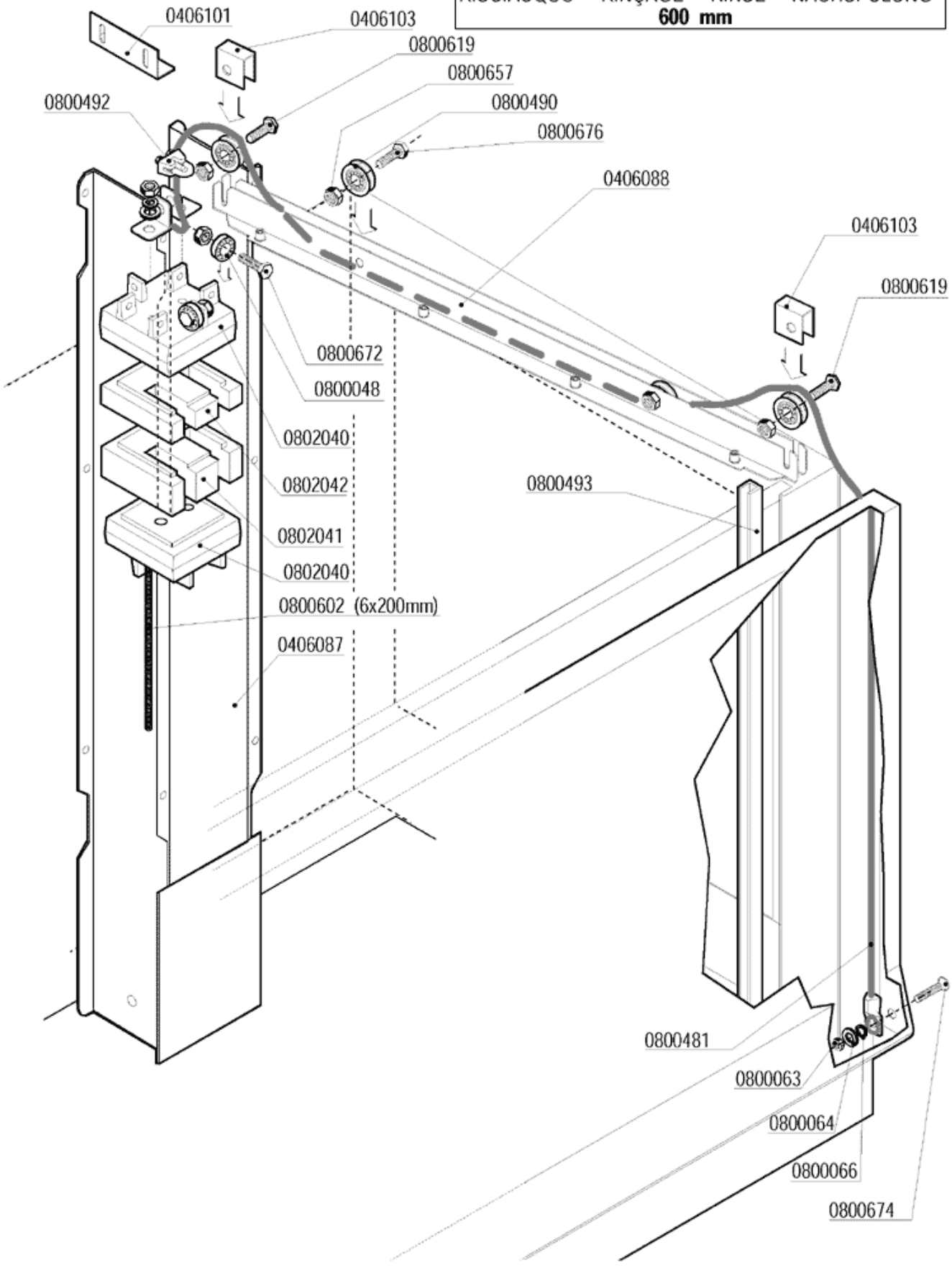

lamber	PANNELLO COMANDI - PANNEAU DE CONTRÔLE CONTROL PANEL - SCHALTTAFEL	MOD. **LINEAR**	TAV. **18 A** ED. 09/00

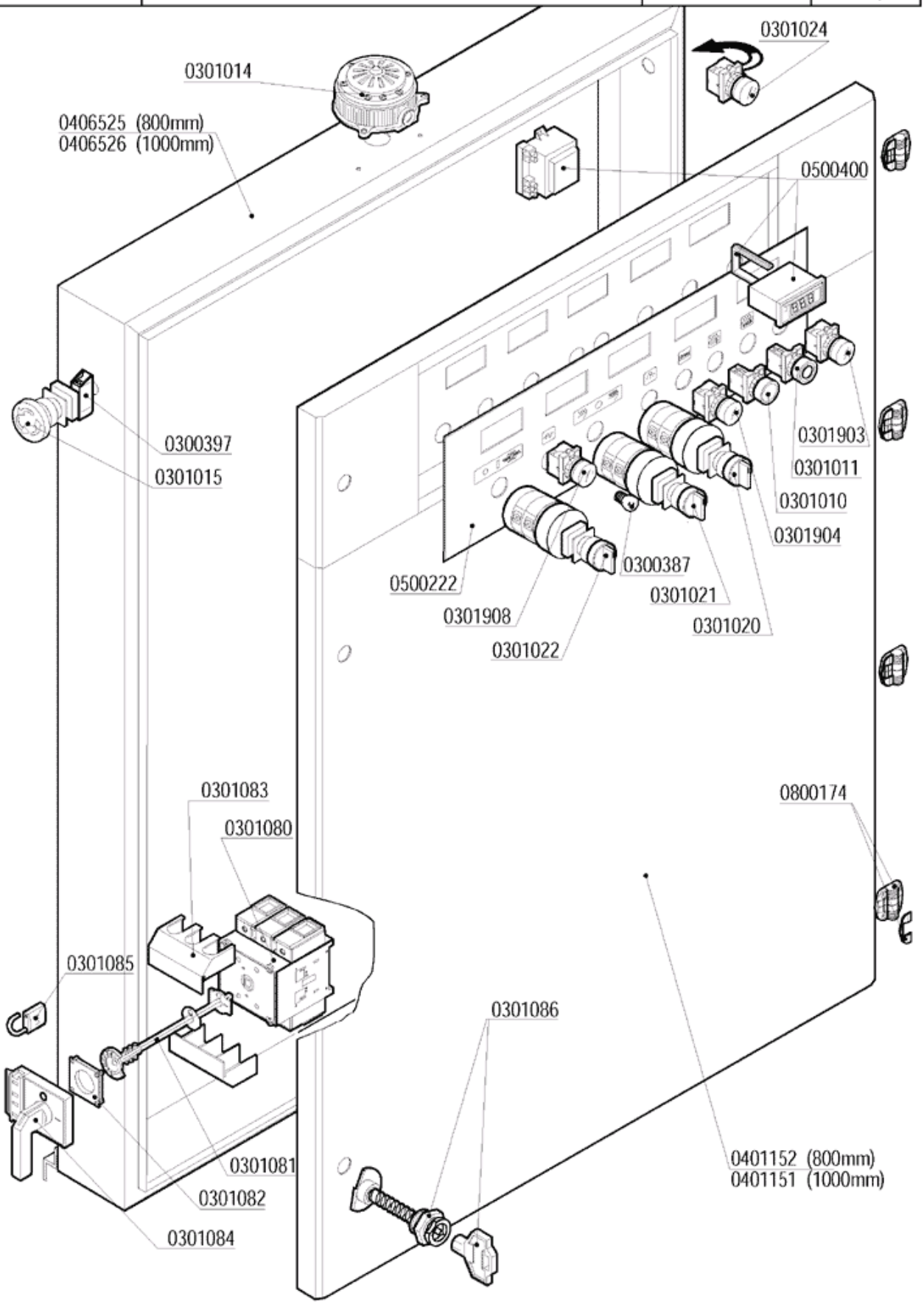

lamber	PANNELLO COMANDI - PANNEAU DE CONTRÔLE CONTROL PANEL - SCHALTTAFEL	MOD. **LINEAR-ek**	TAV. **18 B** ED. 05/2006

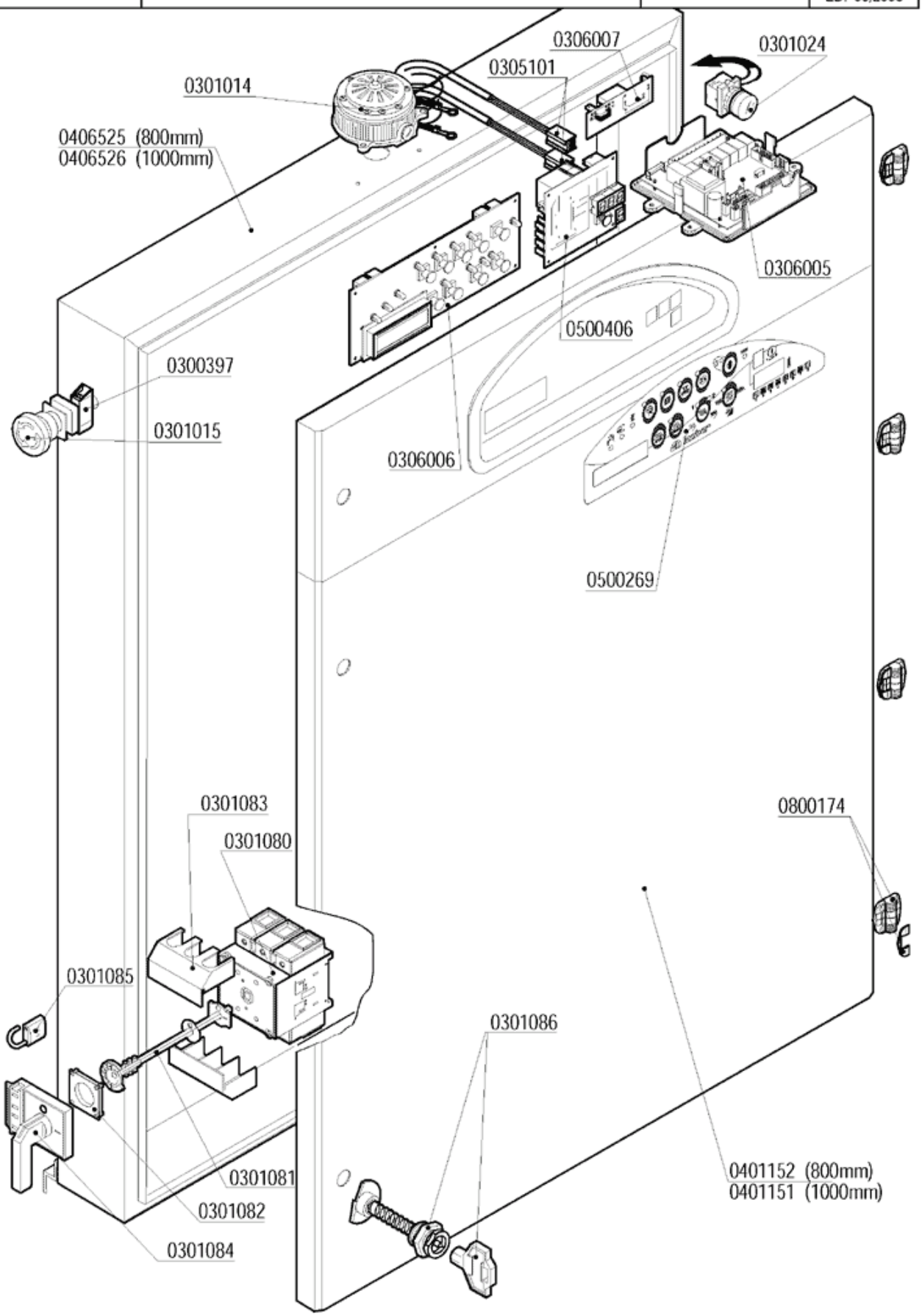

lamber	CASSETTA ELETTRICA - TABLEAU ELECTRIQUE CONTROL BOX - ELEKTRO SCHALTTAFEL	MOD. **LINEAR**	TAV. **19 A** ED. 09/00

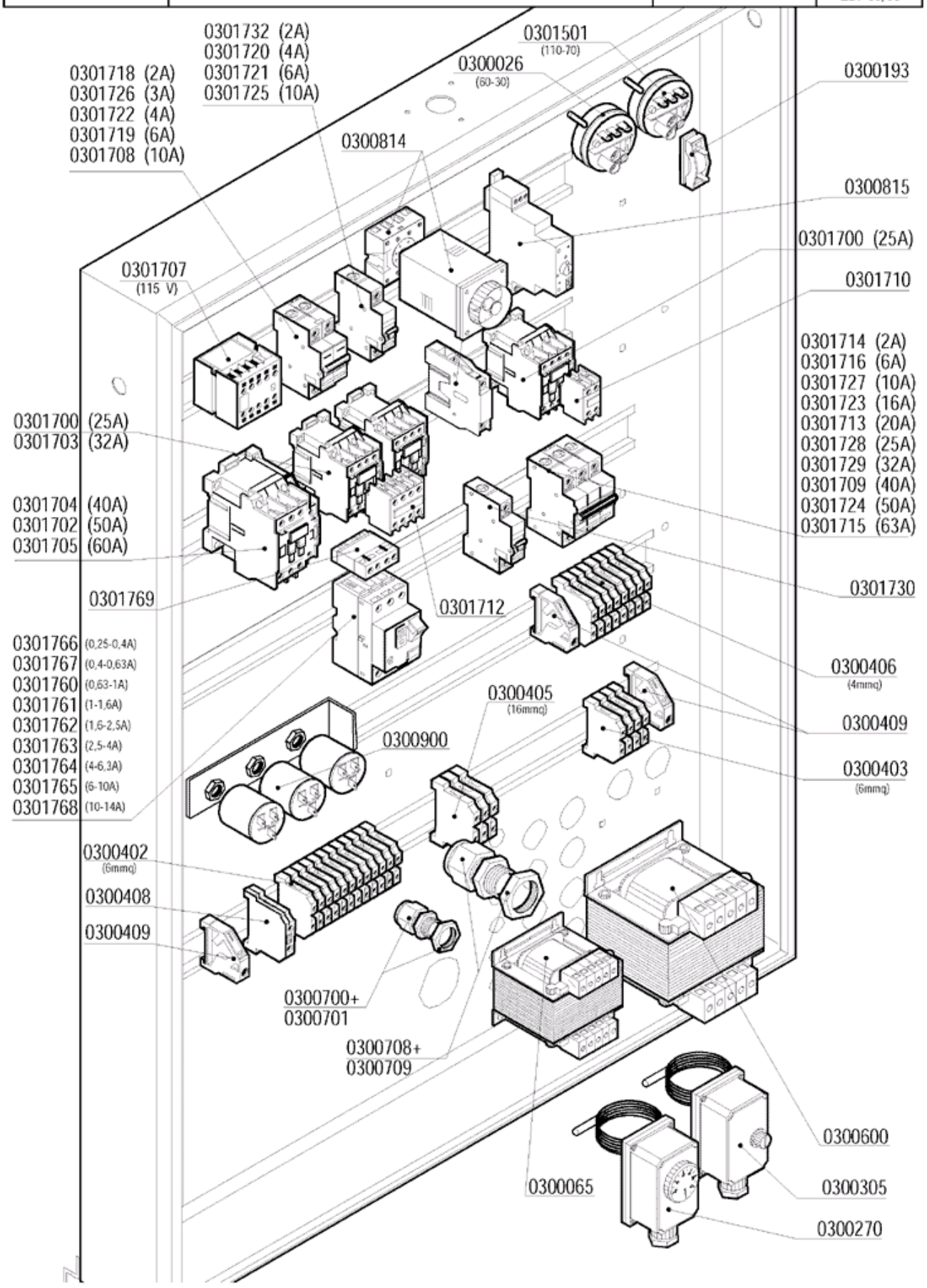

lamber	CONDENSA VAPORI - CONDENSEUR DE BUEES STEAM CONDENSER - KONDENSWASSERABSAUGER	MOD. **CVL**	TAV. **20 A** ED. 10/98

