# F A G O R

**SPARE PARTS CATALOGUE**
**ERSATZTEILKATALOG**
**CATALOGUE PIECES DETACHEES**
**CATALOGO PARTI RICAMBIO**
**CATALOGO DE PIEZAS DE RECAMBIO**
**CATALOGO PECAS DE REPOSICAO**

# LUB 60

**10-02-2012**

# LUB 60


Tav.1: Carrozzeria
Tav.2: Impianto elettrico
Tav.3: Componenti in vasca
Tav.4: Circuito di lavaggio
Tav.5: Circuito di risciacquo
Tav.6: Lance di lavaggio
Tav.7: Pompa di lavaggio
Tav.8: Pompa di scarico

Tab.1: Carrocería
Tab.2: Instalación eléctrica
Tab.3: Componentes en cuba
Tab.4: Circuito de lavado
Tab.5: Circuito d'enjuague
Tab.6: Brazos de lavado
Tab.7: Bomba de lavado
Tab.8: Bomba de descarga

Taf.1: Verkleidung
Taf.2: Elektrische Anlage
Taf.3: Bauteile im Waschtank
Taf.4: Spuelschaltung
Taf.5: Nachspuelschaltung
Taf.6: Wascharme
Taf.7: Spuelpumpe
Taf.8: Laugenpumpe

Tav.1: Machine body
Tav.2: Electrical components
Tav.3: Components in the tank
Tav.4: Washing circuit
Tav.5: Rinsing circuit
Tav.6: Washing arms
Tav.7: Washing pump
Tav.8: Draining pump

Tab.1: Carrosserie
Tab.2: Installation électrique
Tab.3: Composants de cuve
Tab.4: Circuit de lavage
Tab.5: Circuit de rinçage
Tab.6: Bras de lavage
Tab.7: Pompe de lavage
Tab.8: Pompe de vidange

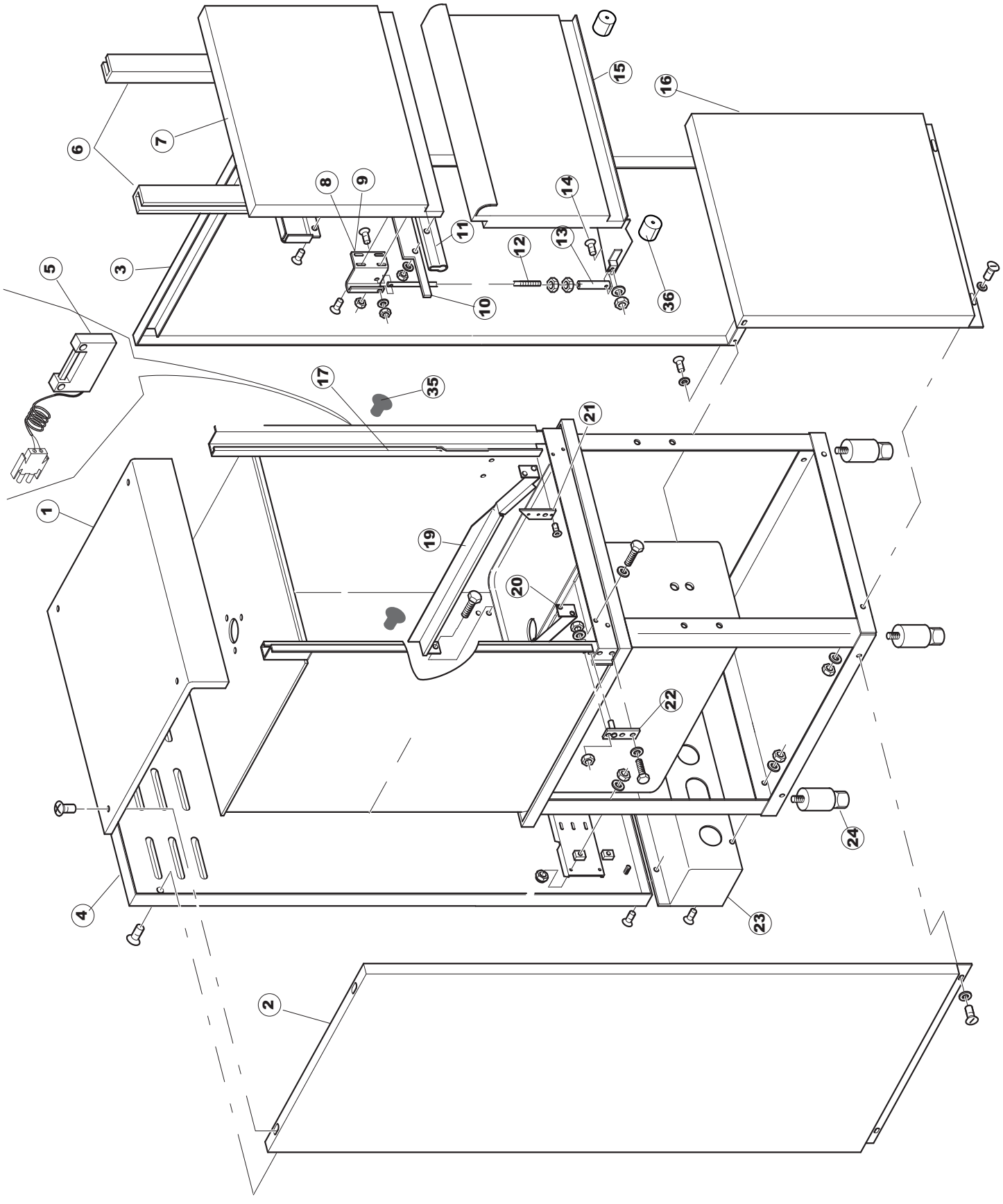
1
2
3
4
5
6
7
8
9
10
11
12
13
14
15
16
17
19
20
21
22
23
24
35
36

# Listino componenti per pagina 1

| | | | |
|---|---|---|---|
| 1 | EU41118 | PANN.SUPER.U61/61H<br>PANEL, UPPER U61/61H<br>OB. PLATTE U61/61H<br>PANN.SUPER.U61/61H<br>PANEL SUPER. U61/61H | |
| 2 | EU41810 | PANNELLO LATERALE SINISTRO<br>SIDE PANEL- LEFT - ASSY FOR POT AND PAN WASHER<br>SEITLICHES PANEEL - LINKS - KOMPLETT FUER KOCHTOEPFS<br>PANNEAU LATERAL GAUCHE, COMPLET POUR LAVE-CASSER(<br>PANEL LATERAL IZDA. COMPL. U61 | |
| 3 | EU41814 | PANNELLO LATERALE DESTRO<br>SIDE PANEL - RIGHT - FOR POT AND PAN WAS HER, ASSY<br>SEITLICH PANEEL - RECHTS - FUER KOCHTOEP FESPUELER, I<br>PANNEAU LATERAL DROIT, COMPLET - POUR LA VE-CASSERC<br>PANEL LATERAL DCHA. COMPL. 610 | |
| 4 | EU41122 | PANNELLO RETRO U61<br>PANEL, REAR U61<br>PLATTE, HINTEN U61<br>PANNELLO ARRIERE U61<br>PANEL TRASERO U61 | |
| 5 | EU80871 | MICRO MAGNETICO<br>MAGNETIC DOOR SWITCH<br>TUERKONTAKTSCHALTER<br>CONTACTE MAGNETIQUE<br>CONTACTO MAGNETICO | |
| 6 | EU41038 | GUIDA SCORR.SPORTELLO SUP.U61/61H<br>GUIDE, UPP.DOOR SLIDING U61/61H<br>SCHIEBER, OB.TÜR U61/61H<br>GUIDE GLISSEM.VOLET SUP.U61/61H<br>GUIA CORRED. PUERTA SOP. U61/61H | |
| 7 | EU41580 | PORTA SUPERIORE<br>UPPER DOOR, ASSY FOR POT AND PAN WASHERS<br>TUER - OBEN - KOMPLETT - FUER KOCHTOEPFE SPUELER<br>PORTE SUPERIEURE COMPLETE POUR LAVE-CASS EROLES<br>PUERTA SUP.COMPL.U61/61H | |
| 8 | EU4108701 | SQUADRA DESTRA AGGANCIO TIRANTE SPORTELLO SUPERIC<br>RIGHT BRACKET FOR UPPER DOOR TIE ROD FASTENING<br>RECHT-HATER FUER ANKUPPELN DER OBEREN TUER-STANG<br>EQUERRE DROITE ACCROCHAGE TIRANT PORTE SUPERIEUR<br>ESCUAD DCHA. FIJA TIR PUERTA SUP. LP PG ACAB. | |
| 9 | EU4108801 | SQUADRETTA SINISTRA AGGANCIO TIRANTE SPORTELLO SUF<br>LEFT BRACKET FOR UPPER DOOR TIE ROD CONNECTION FOF<br>LINK-HALTER FUER ANKUPPELN OBEREN TUERSTANGE FUEF<br>EQUERRE DROITE ACCROCHAGE TIRANTE PORTE SUPERIEUI<br>ESCUAD IZQDA. FIJ TIR PUERTA SUP. LP PG ACAB. | |
| 10 | EU41582 | STAFFA GUARNIZIONE PORTA<br>DOOR PACKING SUPPORT - UPPER - FOR POT A ND PAN WASI<br>HALTERUNG FUER TUERPACKUNG - OBEN FUER K OCHTOEPI<br>SUPPORT JOINT PORTE SUPERIEURE POUR LAVE -CASSEROI<br>SOPORTE JUNTA PUERTA SOP. U61. . | |
| 11 | EU41583 | GUARNIZIONE PORTA | |
| 12 | EU4109301 | TIRANTE SPORTELLO 610<br>TIE-ROD, DOOR 610<br>ZUGSTAB, TÜR 610<br>TIRANT VOLET 610<br>TIRANTE PUERTA 610 | |
| 13 | EU41095 | BUSSOLA TIRANTE PORTA 610/610H<br>BUSHING, DOOR TIE-ROD 610/610H<br>BUCHSE, TÜRZUGSTAB 610/610H<br>DOUILLE TIRANT PORTE 610/610H<br>CASQUILLO TIRANTE PUERTA 610/610H | |
| 14 | EU486078 | VITE TC-CE M6X40 INOX<br>SCREW TC-CE M6X40 INOX<br>SCHRAUBE TC-CE M6X40 INOX<br>VIS TC-CE M6X40 INOX<br>TORNILLO TC-CE M6X40 INOX | |
| 15 | EU41070 | SPORT (=4107001)INFER COMPLETO LP101 | |

| | | | |
|---|---|---|---|
| 16 | EU41327 | PANNELLO ANTERIORE<br>FRONT PANEL<br>FRONTPANEEL<br>PANNEAU AVANT<br>PANEL DELANTERO EL-BASE | |
| 17 | EU929199 | PIEDINO BATTUTA TIPO 30191.1.2(NERO)<br>FOOT, BUFFER TYPE 30191.1.2 (NOIR)<br>STÜTZFUSS, ANSCHLAG TYP 30191.1.2 (SCHWARZ)<br>PIED FEUILL. TYPE 30191.1.2(NOIR)<br>PATA TOPE TIPO 30191. 1. 2(NEGRO) | |
| 18 | EU41059 | PARASPRUZZI PER BREAK-TANK U61..<br>SPLASHGUARD FOR BREAK-TANK U61..<br>SPRITZBLECH FÜR BREAK-TANK U61..<br>ANTIECLABOUSS. POUR BREAK-TANK U61..<br>ANTI-SALPICADURAS PARA BREAK-TANK U61. . | |
| 19 | EU41539 | GUIDA CESTO<br>RACK GUIDE<br>KORBFUEHRUNG<br>COULISSE PANIER<br>GUIA CESTA | |
| 20 | EU41539 | GUIDA CESTO<br>RACK GUIDE<br>KORBFUEHRUNG<br>COULISSE PANIER<br>GUIA CESTA | |
| 21 | EU4113501 | SPESSORE LAT.SPORTELLO<br>SIDE THICKNESS FOR DOOR<br>SEITL. EINLEGERING FÜR TÜR<br>EPAISSEUR LAT. VOLET<br>GROSOR LAT. PUERTA | |
| 22 | EU4114501 | PIASTRINA PERNO SPORTELLO U61..<br>PLATE, DOOR PIN U61..<br>PLATTE, TÜRANGEL U61..<br>PLAQUE PIVOT VOLET U61..<br>PLANCHITA PERNO PUERTA U61. . | |
| 23 | EU41622 | PANNELLO RETRO INFERIORE<br>REAR PANEL<br>RUECKWANDVERKLEIDUNG<br>PANNEAU ARRIERE<br>PANEL PARTE POSTERIOR INFERIOR | |
| 24 | EU927006 | PIEDE REGOLABILE X TRAINO<br>FOOT, ADJUST. FOR TACK CONVEYOR<br>VERSTELLFUSS FÜR KORBTR.<br>PIED REGLABLE POUR AVANC.<br>PATA REGULABLE X ACCION. | |
| 35 | EU929199 | PIEDINO BATTUTA TIPO 30191.1.2(NERO)<br>FOOT, BUFFER TYPE 30191.1.2 (NOIR)<br>STÜTZFUSS, ANSCHLAG TYP 30191.1.2 (SCHWARZ)<br>PIED FEUILL. TYPE 30191.1.2(NOIR)<br>PATA TOPE TIPO 30191. 1. 2(NEGRO) | |
| 36 | EU41100 | TAMPONE BATTUTA SPORTELLO LP<br>DOOR BUFFER LP<br>PUFFER, TÜRANSCHLAG LP<br>TAMPON FEUILLURE VOLET LP<br>TAMPON TOPE PUERTA LP | |

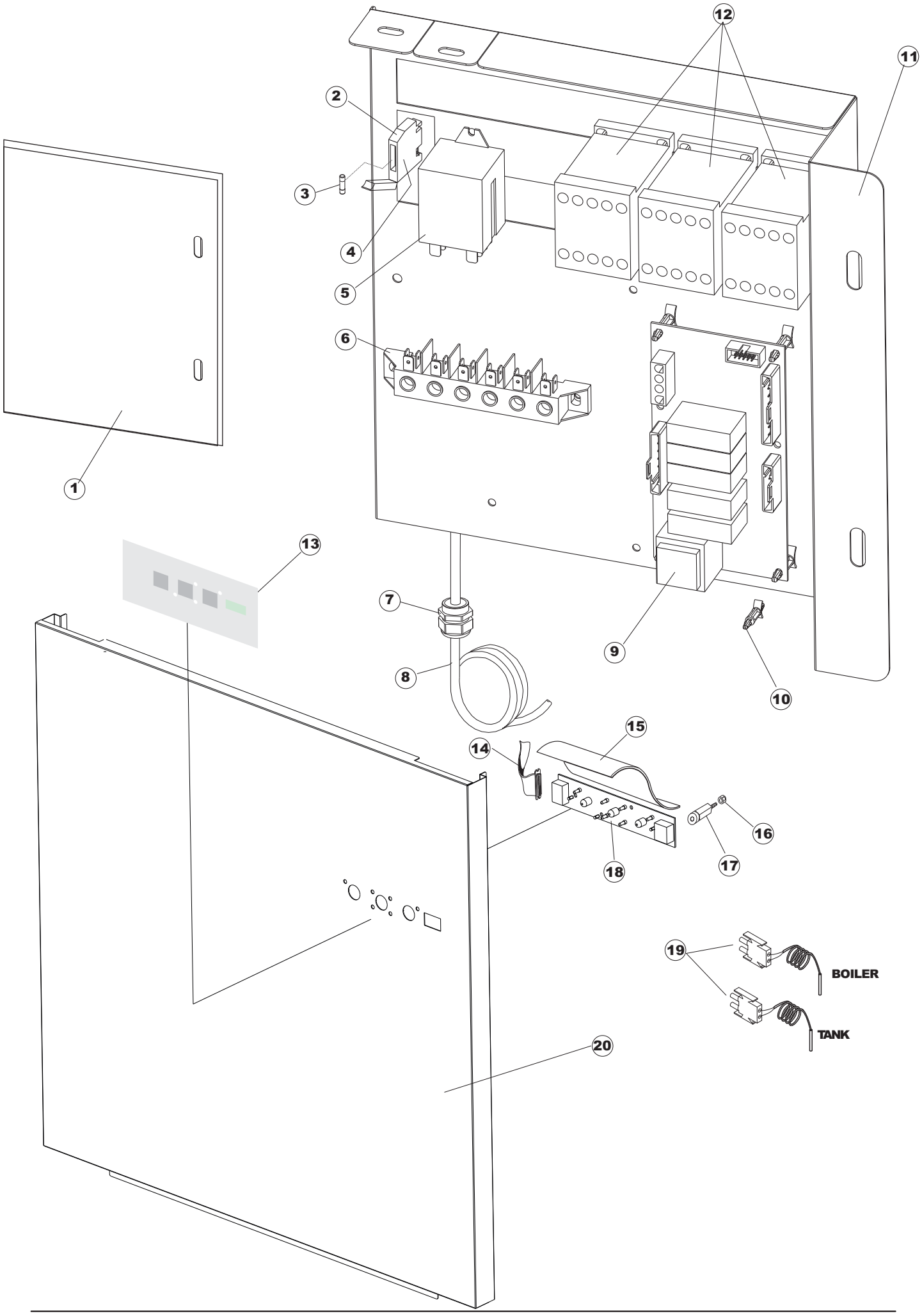
1
2
3
4
5
6
7
8
9
10
11
12
13
14
15
16
17
18
19
BOILER
TANK
20

# Listino componenti per pagina 2

| | | | |
|---|---|---|---|
| 1 | EU41118 | PANN.SUPER.U61/61H<br>PANEL, UPPER U61/61H<br>OB. PLATTE U61/61H<br>PANN.SUPER.U61/61H<br>PANEL SUPER. U61/61H | |
| 2 | EUH.228047 | * PORTA-FUSIBILE<br>* FUSE-HOLDER<br>*SICHERUNGSTRAGER<br>* PORTE-FUSIBLE<br>* PORTAFUSIBLE | |
| 3 | EU228004 | FUSIBILE 5X20F 4A FAST<br>FUSE, 5X20 4A FAST<br>SICHERUNG, 5X20 4A FAST<br>FUSIBLE 5X20 4A FAST<br>FUSIBLE 5X20 4A FAST | |
| 4 | EUH.228048 | * CHIUSURA PORTA-FUSIBILE<br>* CLAMPING FOR FUSE-HOLDER<br>* SICHERUNGSTRAGER-VERSCHLUSS<br>* COUVERTURE PORTE-FUSIBLE<br>* CIERRE PORTAFUSIBLE | |
| 5 | EU929115 | RELE 16A 230V 62.82<br>RELAY 16A 230V 62.82<br>RELAIS 16A 230V 62.82<br>RELAIS 16A 230V 62.82<br>RELE 16A 230V 62. 82 | |
| 6 | EU220011 | * MORSETTIERA 5.POLI + TERRA FV.122<br>* TERMINAL BOARD, 5-POLES + EARTH FV.122<br>* KLEMMENBRETT, 5-POLIG + ERDUNG FV.122<br>* PLAQUE A BORNE 5POLES + TERRE FV.122<br>* BORNERO 5. POLOS + TIERRA FV. 122 | |
| 7 | EUDEP521 | PRESSACAVO PG21 (BER 4721)<br>CABLE GLAND PG21 (BER 4721)<br>KABELSCHELLE PG21 (BER 4721)<br>SERRE CABLE PG21 (BER 4721)<br>SUJETA-CABLE PG21 (BER 4721) | |
| 8 | EU80997 | CAVO ALIMENTAZIONE<br>MAIN CABLE<br>ANSCHLUSSKABEL 400V<br>CÂBLE ÉLECTRIQUE<br>CABLE ALIMENTACION 5X2,5MM (H07RN-F) | |
| 9 | EU215027 | SCHEDA GET50 LA50<br>MAIN BOARD<br>KARTE<br>CARTE ELECTRONIQUE<br>TARJETA CHORROS50 LA50 | |
| 10 | EUCWP2 | PIEDINI SUPPORTO SCHEDA ELET.(ART.DRA6A)<br>FEET, ELECTR.CARD SUPPORT(ART.DRA6A)<br>STÜTZFÜSSE FÜR PLATINE (ART.DRA6A)<br>PIEDS SUPPORT FICHE ELECTR.(ART.DRA6A)<br>PATAS SOPORTE TARJETA ELECT. (ART.DRA6A) | |
| 12 | EU73350 | CONTATTORE 230/50-60HZ<br>CONTACTOR 230-50/60HZ<br>KONTAKT-GEBER 230-50/60HZ<br>CONTACTEUR 230-50/60HZ<br>CONTACTOR | |
| 13 | EU41515 | POLIESTERE<br>POLYESTER<br>POLYESTERE<br>POLYESTERE<br>POLIESTER (LUB60-LUB60H) FAGOR | |
| 14 | EU80934 | CAVO FLAT COMANDI INFERIORI CAPOT<br>CABLE FLAT CAPOT<br>FLACHKABEL<br>CABLE LIAISON<br>CABLE FLAT MANDOS INFERIORES CAPOT | |
| 15 | EU69810 | TENDINA COPERTURA TASTIERA PANNELLO ANTERIORE<br>CURTAIN<br>VORHANG<br>RIDEAU<br>CORTINA COPERTURA TECLADO PAN. DELANT. | |
| 16 | EU417119 | DADO M3 PLASTICA BIANCO<br>NUT, M3 PLASTIC WHITE<br>SCHRAUBENMUTTER, M3 KUNST. WEISS<br>ECROU M3 PLASTIQUE BLANC<br>TUERCA M3 PLASTICO BLANCO | |

| | | | |
|---|---|---|---|
| 17 | EU419036 | SPACER<br>SPACER, M3<br>ABSTANDSSTÜCK, M3<br>ENTRETOISE M3<br>DISTANCIADOR M3 | |
| 18 | EU227074 | PULSANTIERA GET50(BASSO DI GAMMA)<br>PUSH BUTTONS ASSEMBLY<br>TASTENFELD<br>TABLEAU DE PUSSOIR<br>BOTONERA GET50(BAJA DE GAMA) | |
| 19 | EU231016 | SONDA TEMPERATURA<br>TEMP. PROBE<br>TEMPERATURSONDE<br>SONDE<br>SONDA TEMPERATURA (AMPOLLA ACERO) | |
| 20 | EU41327 | PANNELLO ANTERIORE<br>FRONT PANEL<br>FRONTPANEEL<br>PANNEAU AVANT<br>PANEL DELANTERO EL-BASE | |

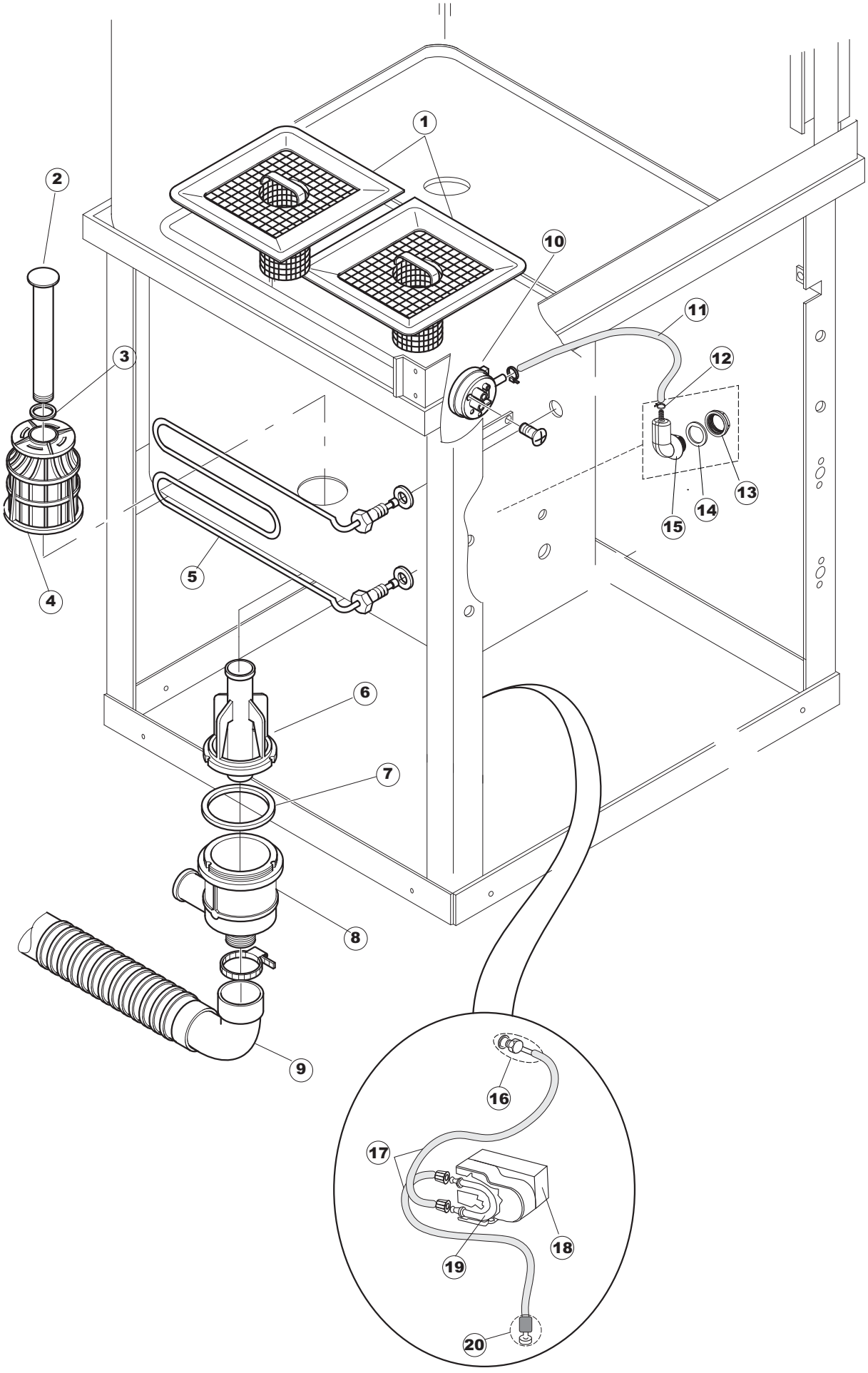
1
2
3
4
5
6
7
8
9
10
11
12
13
14
15
16
17
18
19
20

# Listino componenti per pagina 3

| | | | |
|---|---|---|---|
| 1 | EU41257 | FILTRO VASCA COMPLETO<br>TANK FILTER<br>TANKSIEB, KOMPLETT<br>FILTRE CUVE COMPLET,<br>FILTRO CUBETA COMPLETO U61. . | |
| 2 | EU80250 | TROPPO PIENO RIVER 82/83<br>OVERFLOW RIVER 82/83<br>ÜBERLAUF RIVER 82/83<br>TROP-PLEIN RIVER 82/83<br>REBOSE RIVER 82/83 | |
| 3 | EUCGR4131NT | O-RING 4131 VITON NERO SH.70<br>O-ring 4131 BLACK SCREW SH.70<br>O-RING 4131 SCHWARZE SCHRAUBE SH.70<br>O-RING 4131 VIS J11312 SH.70<br>O-RING 4131 VITON NEGRO SH. 70 | |
| 4 | EU121081 | FILTRO POMPA GRIGIO 44/TERZ.<br>FILTER, PUMP GREY 44/TERZ.<br>FILTER, PUMPE GRAU 44/TERZ.<br>FILTRE POMPE GRIS 44/TERZ.<br>FILTRO BOMBA GRIS 44/TERZ. | |
| 5 | EU70562 | RESISTENZA 3000W 230V MONOFASE<br>TANK HEATING ELEMENT<br>TANK WIEDERSTAND<br>RESISTENCE CUVE | |
| 6 | EU80470 | GHIERA SCARICO<br>RING NUT, DRAIN<br>GEWINDERING, ABLAUF<br>BAGUE VIDANGE<br>VIROLA DESCARGA COLG.VER COD.429038 | |
| 7 | EU456040 | OR 201 NBR70 22<br>O-ring 201 NBR70 22<br>O-Ring 201 NBR70 22<br>OR 201 NBR70 22<br>OR 201 NBR70 22 | |
| 8 | EU136020 | CORPO ASPIRAZIONE/SCARICO 22/44<br>INTAKE/DRAIN BODY 22/44<br>GEHAUSE, EINLASS/ABLASS 22/44<br>CORPS ASPIRATION/VIDANGE 22/44<br>CUERPO ASPIRACION/DESCARGA 22/44 | |
| 9 | EU143136 | TUBO SCARICO VERS.NE INTEGR.22<br>PIPE, DRAIN - INTEGR. VERSION 22<br>ABLASSROHR - VOLLST. VERSION 22<br>TUYAU VIDANGE VERS.NE INTEGR.22<br>TUBO DESCARGA VERSION INTEGR. 22 | |
| 10 | EU926049 | PRESSOSTATO 761999 180-70<br>PRESSURE SWITCH 761999 180-70<br>DRUCKSCHALTER 761999 180-70<br>PRESSOSTAT 761999 180-70<br>PRESOSTATO 761999 180-70 | |
| 11 | EU143253 | TUBO SILICONE 3X8<br>SILICON PIPE 3X8<br>SILIKONSCHLAUCH 3X8<br>TUYAU SILICONE 3X8<br>TUBO SILICONA 3X8 | |
| 12 | EUCFF10073 | FASCETTA A FILO 10073<br>COLLIER DE SERRAGE EN FIL D'ACIER 10073<br>SCHLAUCHSCHELLE 10073<br>WIRE HOSECLAMP 10073<br>ABRAZADERA CON HILO 10073 | |
| 13 | EU417120 | DADO PLASTICA GRIGIO<br>PLASTIC NUT<br>KUNSTSTOFFMUTTER 1-1/4<br>ECROU EN PLASTIQUE<br>TUERCA PLASTICO GRIS | |
| 14 | EU437098 | GUARNIZIONE NUOVA CAMP.PRESS.<br>PACKING FOR AIR TRAP OF PRESSURE SWITCH<br>DICHTUNG FUER LUFTFALLE<br>JOINT PRISE D'AIRE PRESSOSTAT<br>JUNTA NUEVA CAMP.PRES. | |
| 15 | EU107012 | CAMPANA PRESSOSTATO (L) RV40-50-CAPOTE<br>AIR TRAP<br>LUFTFALLE<br>PRISE D'AIR<br>CAMPANA PRESOSTATO (L) RV40-50-CAPOTA | |

| | | | |
|---|---|---|---|
| 16 | EU468151 | RACCORDO ENTRATA SAPONE CPL NM * SALDATO<br>UNION, EXTRA DET. CPL NM * WELDED<br>TANKEINLAUF CPL NM*<br>RACCORD ENTREE SAVON CPL NM * SOUDE<br>EMPALME ENTRADA JABON CPL NM * SOLDADO | |
| 17 | EU143194 | TUBO 4x6 CRISTAL TRASPARENTE<br>PIPE 4x6 CRISTAL, TRANSP.<br>SCHLAUCH 4X6 CRISTAL, DURCHS.<br>TUYAU 4x6 CRISTAL TRANSPARENT<br>TUBO 4x6 CRISTAL TRASPARENTE | |
| 18 | EU209021 | DOSAT.PERIST.DETERGENTE REG.<br>PERISTALTIC DISPENSER (NBR-3)<br>DOSIERUNG PERISTALTIK<br>DOSAGE PÉRISTALTIQUE<br>DOSIFIC. PERIST.DETERGENTE REG. | |
| 19 | EU143219 | TUBETTO SANTOPRENE 6X10 RACCORDI+GHIERE<br>TUBE, SANTOPRENE 6X10 FITTINGS+METAL RINGS<br>MEMBRANSCHLAUCH SANTOPREN<br>TUBE SANTOPRENE 6X10 RACC.+COLL.DE SERR.<br>TUBITO SANTOPRENE 6X10 EMPALMES+VIROLAS | |
| 20 | EU121075 | FILTRO ASPIR.INOX(775239-001)<br>FILTER, SUCT.INOX (775239-001)<br>FUSSFILTER<br>FILTRE ASPIR.INOX(775239-001)<br>FILTRO ASPIR. INOX(775239-001) | |

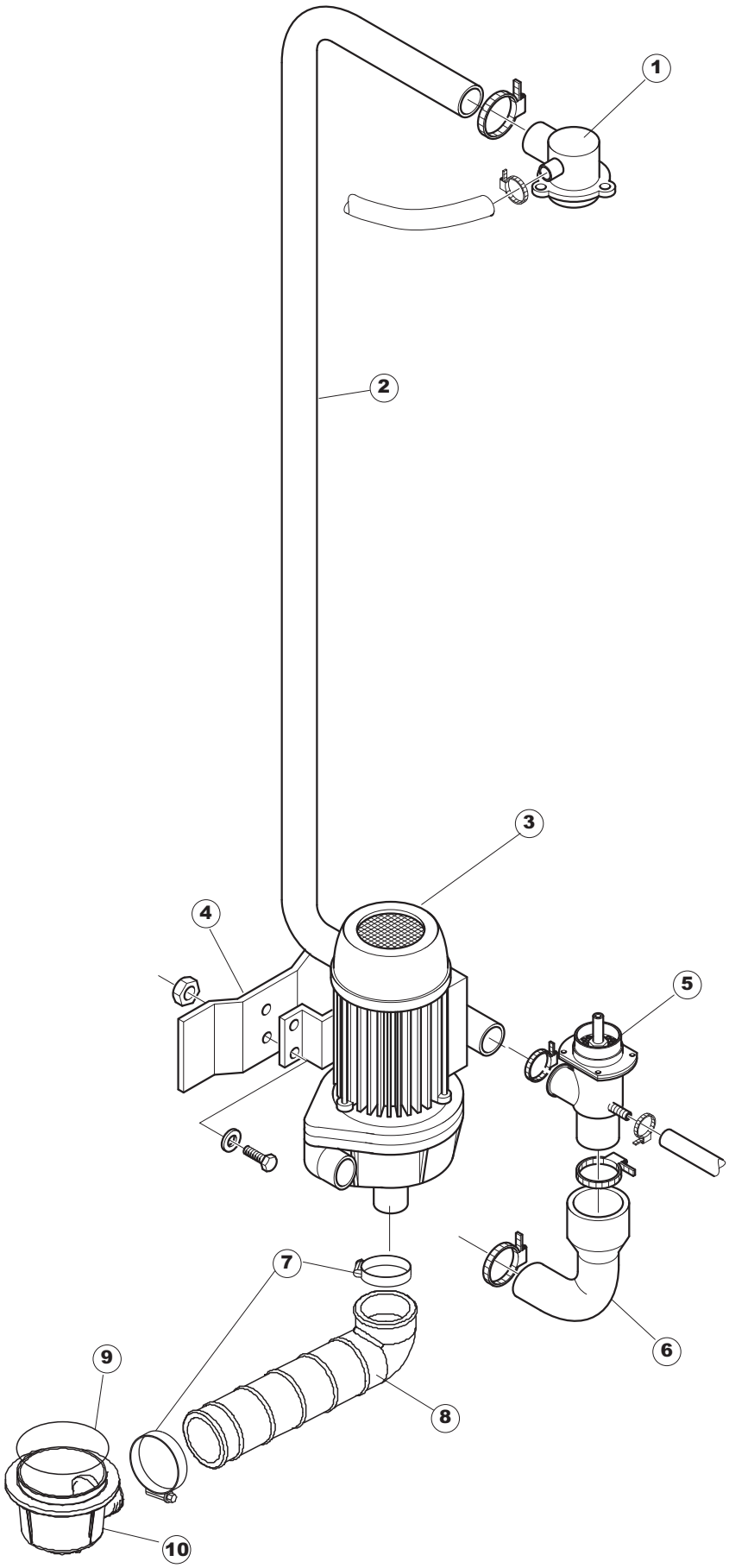
1
2
3
4
5
6
7
8
9
10

# Listino componenti per pagina 4

| | | | |
|---|---|---|---|
| 1 | EU35604 | CONDOTTO SUPERIORE<br><br>CONDUCTO CENTRAL SUPERIOR LP92 | |
| 2 | EU41554 | TUBO LAVAGGIO<br>WASH PIPE<br>SPUELLEITUNGAVAGE<br>P/TUYAU LAVAGE<br>TUBO LAVADO | |
| 3 | EU80115 | EL.P 1,6KW 230-400V/50HZ (5295.5050)<br>MOTORPUMP 1,6KW 230-400V/50HZ (5295.5050)<br>ELEKTROPUMPE 1,6KW 230-400V/50HZ (5295.5050)<br>EL.P 1,6KW 230-400V/50HZ (5295.5050)<br>ELECTROBOMBA 1,6KW 230-400V/50HZ (5295.5050) | |
| 4 | EU41626 | STAFFA POMPA | |
| 5 | EU4206301 | RACCORDO LANCIA LAV.INF.EW610..<br>UNION, WASH.ARM LOW.EW610..<br>VERBINDUNGSST., SPÜLARM UNTEN EW610..<br>RACCORD RAMPE DE LAV.INF.EW610..<br>EMPALME LANZA LAV. INF. EW610. . | |
| 6 | EU41560 | MANICOTTO<br>COUPLING<br>MUFFE<br>MANCHON<br>MANGUITO LAVADO | |
| 7 | EUCFS3 | FASCETTA A VITE TORRO W2B 60-80/12<br>CLAMP, HOSE-TYPE TORRO W2B 60-80/12<br>SCHELLE, SCHRAUBE TORRO W2B 60-80/12<br>BANDE DE SERRAGE A VIS TORRO W2B 60-80/12<br>ABRAZADERA CON TORNILLO TORRO W2B | |
| 8 | EU80186 | MANICOTTO ASPIRAZ.POMPA RIVER<br>SLEEVE, SUCT.PUMP RIVER<br>MUFFE, ABSAUG.PUMPE RIVER<br>MANCHON ASPIRAT.POMPE RIVER<br>MANGUITO ASPIRAC. BOMBA RIVER | |
| 9 | EU456040 | OR 201 NBR70 22<br>O-ring 201 NBR70 22<br>O-Ring 201 NBR70 22<br>OR 201 NBR70 22<br>OR 201 NBR70 22 | |
| 10 | EU136020 | CORPO ASPIRAZIONE/SCARICO 22/44<br>INTAKE/DRAIN BODY 22/44<br>GEHAUSE, EINLASS/ABLASS 22/44<br>CORPS ASPIRATION/VIDANGE 22/44<br>CUERPO ASPIRACION/DESCARGA 22/44 | |

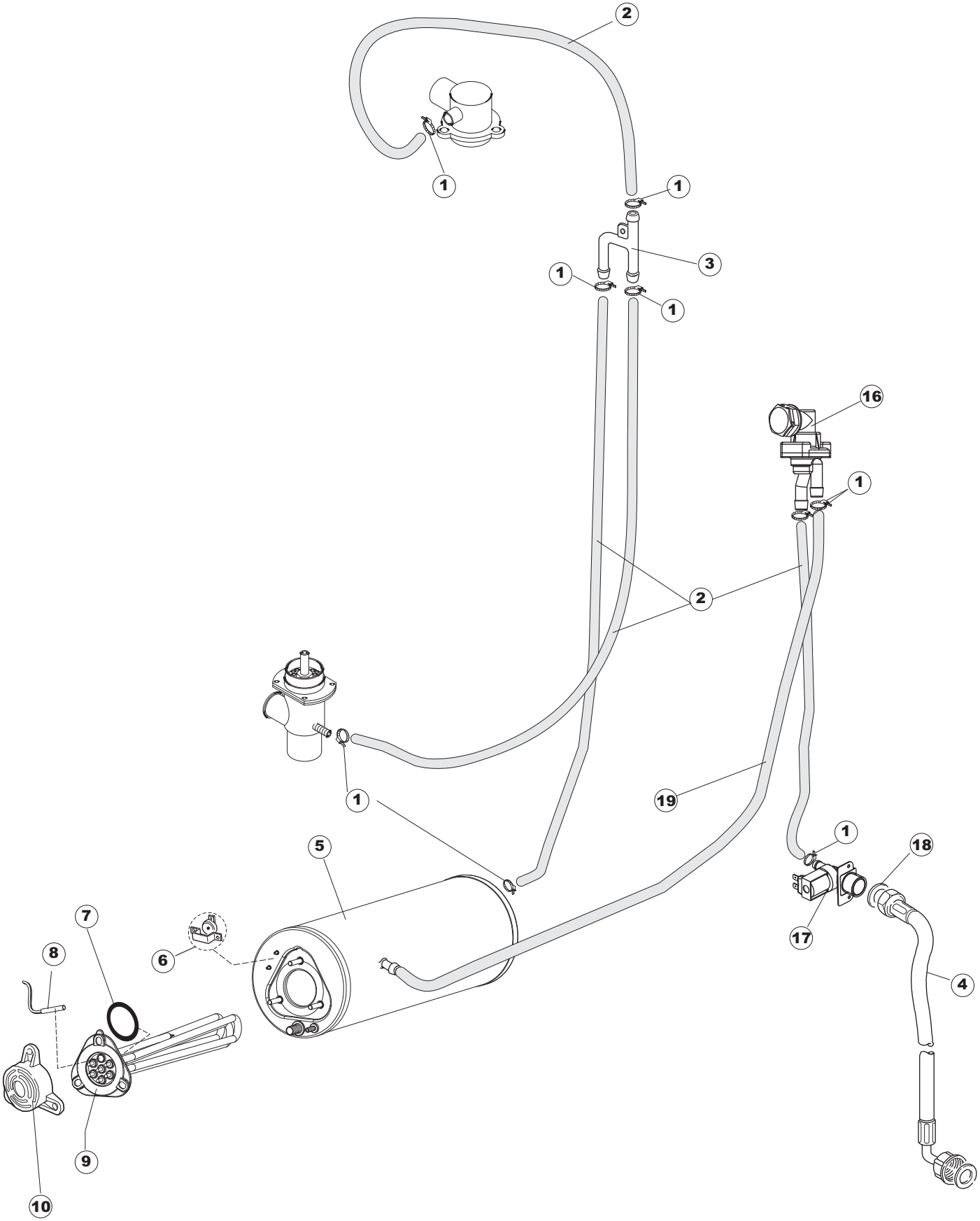
2
1
1
3
1
1
16
1
2
1
19
1
18
17
4
5
7
8
6
9
10

# Listino componenti per pagina 5

| | | | |
|---|---|---|---|
| 1 | EU927322 | FASCETTA NASTRO 14-24<br>CLAMP, TAPE 14-24<br>SCHLAUCHSCHELLE 12-22<br>BANDE DE SERRAGE CONVOYEUR 14-24<br>ABRAZADERA CINTA 12-22 | |
| 2 | EU143010 | TUBO PRESS.TP 12X19.5<br>PIPE, PRESSURE SWITCH TP 12X19.5<br>ROHR, DRUCKSCHALTER TP 12X19.5<br>TUYAU PRESS.TP 12X19.5<br>TUBO PRES. TP 12X19. 5 | |
| 3 | EU143268 | GIUNZIONE DI RISCIACQUO<br>RINSE MANIFOLD<br>Y-STUECK<br>RACCORD DE RINCAGE<br>UNION ENJUAGUE PLAST. | |
| 4 | EU929169 | TUBO DI CARICO DEL TERMOPLASTICO<br>PIPE, THERMOPLASTIC DELIVERY<br>ZULAUFSCHLAUCH, WASSER THERMOPLAST<br>TUYAU DE CHARG. DU THERMOPLASTIQUE<br>TUBO DE CARGA DEL TERMOPLASTICO | |
| 5 | EU80389 | BOILER RIVER CAPOT<br>BOILER RIVER CAPOT<br>BOILER DURCHSCHUBSPÜLAUTOM. RIVER<br>CHAUDIERE RIVER CAPOT<br>CALENTADOR RIVER CAPOT | |
| 6 | EU926189 | TERMOSTATO BOILER SIC.95ø<br>THERMOSTAT, BOILER, SAF.95ø<br>SICHERHEITSTHERMOSTAT BOILER 95°<br>THERMOSTAT CHAUDIERE SEC. 95ø<br>TERMOSTATO CALENTADOR SEG. 95ø | |
| 7 | EU456002 | OR 48x6,2<br>O-ring 48x6,2<br>O-Ring 48x6,2<br>OR 48x6,2<br>OR 48x6,2 | |
| 8 | EU231016 | SONDA TEMPERATURA<br>TEMP. PROBE<br>TEMPERATURSONDE<br>SONDE<br>SONDA TEMPERATURA (AMPOLLA ACERO) | |
| 9 | EU230083C | KIT RESISTENZA REB230083 (6KW)<br>KIT, RESISTANCE REB230083 (6KW)<br>KIT, WIDERSTAND REB230083 (6KW)<br>KIT RESISTANCE REB230083 (6KW)<br>KIT RESISTENCIA REB230083 (6KW) | |
| 10 | EU69870 | PROTEZIONE RESISTENZA BOILER<br>BOILER HEATING ELEMENT PROTECTION<br>HEIZUNGSCHUETZ DES WARMWASSERBEREITERS<br>PROTECTION RESISTANCE BOILER<br>PROTECCION RESISTENCIA CALENTADOR | |
| 16 | EU144010 | DISPOSIT.A/R.(EB) VEDI 144010NT<br>CHECK VALVE (EB) W/DRAIN SEE 144010NT<br>RÜCKSCHLAGVORR.(EB<br>DISPOSIT.A/R.(EB) AVEC RACCORD DE VIDANGE<br>DISPOSIT. A/R. (EB) CON EMPALME ALIVIAD. | |
| 17 | EU240016 | VALVOLA DI CARICO 1VIA 3/4 230V PARZ.16L<br>LOADING S.VALVE 1-WAY 3/4 230V PART.16L<br>ZUFLUSSVENTIL 1-WEG 3/4 230V DROSS.16L<br>SOUPAPE DE CHARG. 1VOIE 3/4 230V PARZ.16L<br>VALVULA DE CARGA 1VIA 3/4 230V PARC. 16L | |
| 18 | EU437041 | GUARNIZIONE 3/4 GAS CARICO<br>GASKET 3/4 GAS LOAD<br>DICHTUNG 3/4 GASVERSORG.<br>JOINT 3/4 GAZ VID.<br>JUNTA 3/4 GAS CARGA | |
| 19 | EU41556 | TUBO SAGOMATO<br>PIPE<br>ROHR<br>TUYAU<br>TUBO PERFILADO | |

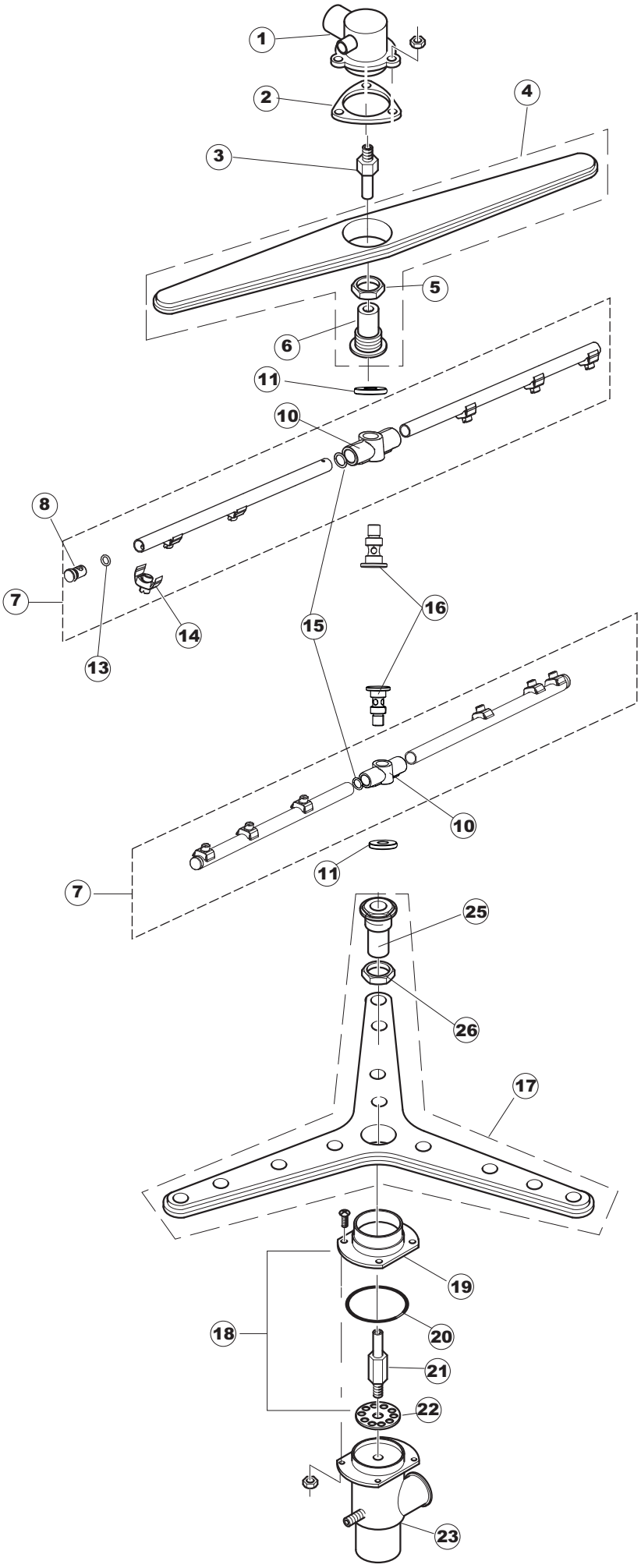
1
2
4
3
5
6
11
10
8
7
16
14
15
13
10
11
7
25
26
17
19
18
20
21
22
23

# Listino componenti per pagina 6

| | | | |
|---|---|---|---|
| 1 | EU35604 | CONDOTTO SUPERIORE<br><br><br>CONDUCTO CENTRAL SUPERIOR LP92 | |
| 2 | EU437064 | GUARNIZIONE COND.CENTR.SUP.50<br>GASKET, MANIFOLD, CENTR.UPP.50<br>DICHTUNG, SAMMELLEITUNG, ZENTR.OB.50<br>JOINT COND.CENTR.SUP.50<br>JUNTA COND. CENTR. SUP. 50 | |
| 3 | EU80282 | ALBERO PERNO RISC.RIVER<br>SHAFT, WASH RINSE RIVER<br>WELLE, ZAPFEN NACHSPÜLEN RIVER<br>ARBRE PIVOT RINC.RIVER<br>EJE PERNO ENJUAGUE RIVER | |
| 4 | EU80311 | PETTINE LAVAGGIO RIVER CAPOT<br>COMB, WASHING RIVER CAPOT<br>KAMM, SPÜLEN RIVER-DURCHSCHUBSPÜLAUTOM.<br>PEIGNE LAVAGE RIVER CAPOT<br>PEINE LAVADO RIVER CAPOT | |
| 5 | EU80314 | DADO LANCIA LAVAGGIO GRIGIO<br>NUT, WASH-ARM GREY<br>SCHRAUBENMUTTER, SPÜLLANZE GRAU<br>ECROU RAMPE DE LAVAGE GRIS<br>VER CODIGO 926128 | |
| 6 | EU80310 | SUPPORTO LANC/LAVAGGIO (RAL7001)<br>SUPPORT, WASH-ARM/WASH. (RAL7001)<br>HALTER, SPÜLLANZE/SPÜL. (RAL7001)<br>SUPPORT RAMPE DE LAVAGE (RAL7001)<br>SOPORTE LANC/LAVADO (RAL7001) | |
| 7 | EU41677 | BRACCIO RISCIACQUO<br>ROTATING RINSE ARM FOR POT AND PAN WASHE R<br>NACHSPUELUNGSARM - DREHBAR - FUER KOCHTO EPFESPUI<br>TOURNIQUET DE RINCAGE POUR LAVE-CASSEROL ES<br>BRAZO ENJUAGUE | |
| 8 | EU926132 | TAPPO PL.X BRACCIO DI RISC.(DWT312)<br>CAP, PLASTIC FOR WASH. ARM (DWT312)<br>PFROPFEN, KUNST. FÜR NACHSPÜLARM (DWT312)<br>BOUCHON PL.POUR BRAS DE RINC.(DWT312)<br>TAPON PL. X BRAZO DE ENJUAGUE (DWT312) | |
| 10 | EU69632 | CORPO PETTINE<br>ARM BODY<br>KOERPER DES NACHSPUELARMES<br>CORPS BRAS<br>CUERPO PEINE ENJUAGUE. | |
| 11 | EU80679 | GHIERA ULTRA RINSE INOX<br>NUT<br>RING<br>BAGUE<br>VIROLA ULTRA RINSE INOX | |
| 13 | EUCGR106 | O-RING 106 GOMMA NITR. (6,75 X 1,78 NBR)<br>O-ring 106 NITRILE RUBBER (6,75 X 1,78 NBR)<br>O-RING 106 NITRILGUMMI (6,75 X 1,78 NBR)<br>O-RING 106 CAOUTCHOUC NITRYLE (6,75 X 1,78 NBR)<br>VER CÓDIGO 456030 | |
| 14 | EU140036 | SPRUZZO RISCIACQUO D.2,5 X TUBO D12<br>RINSE JET<br>DUESE<br>GLICEUR<br>ROCIADOR ENJUAGUE D. 2,5 | |
| 15 | EU456019 | OR 2037<br>O-ring 2037<br>O-Ring 2037<br>OR 2037<br>OR 2037 | |
| 16 | EU80644 | PERNO<br><br>PIVOT BRAS RINCAGE | |
| 17 | EU929195 | LANCIA DI LAV.TRIANGOLARE COMPL.U61<br>COMPLETE TRIANGULAR WASH LANCE U61<br>DREIECKIGER WASCHARM KOMPL. U61<br>LANCE DE LAVAGE TRIANGULAIRE COMPLETE U61<br>LANZA DE LAV.TRIANGULARE COMPL.U61 | |

| | | | |
|---|---|---|---|
| 18 | EU41064CP | CONTROFL.SUP.LANCIA LAV.U61/61H<br>COUNTER-FLANGE, SUPP. FOR ARM-WASH U61/61H<br>GEGENFLANSCH, OB. FÜR SPÜLLANZE U61/61H<br>CONTRE-BRIDE SUP.RAMPE DE LAV.U61/61H<br>CONTRABRIDA SUP. LANZA LAV. U61/61H | |
| 19 | EU41064 | CONTROFL SUPP LANCIA LAV LP<br>SUPPORT<br>UNTERLAGE<br>SUPPORT<br>CONTRABRIDA SUP. LANZA LAV. LP | |
| 20 | EU926252 | OR 4275<br>O-ring 4275<br>O-Ring 4275<br>OR 4275<br>OR 4275 | |
| 21 | EU42053 | PERNO LANCIA LAV.INFER.U61<br>PIN, LOW.WASH. WASH-ARM U61<br>ZAPFEN, UNT.SPÜLLANZE U61<br>PIVOT RAMPE DE LAV.INFER.U61<br>PERNO LANZA LAV. INFER. U61 | |
| 22 | EU41185 | PARZIALIZZATORE PL.<br>DRAUGHT SHUTTER PL.<br>DROSSELGERAT PL.<br>ETRANGLEUR PL.<br>PARCIALIZADOR PL. | |
| 23 | EU4206301 | RACCORDO LANCIA LAV.INF.EW610..<br>UNION, WASH.ARM LOW.EW610..<br>VERBINDUNGSST., SPÜLARM UNTEN EW610..<br>RACCORD RAMPE DE LAV.INF.EW610..<br>EMPALME LANZA LAV. INF. EW610. . | |
| 25 | EU926129 | SUPPORTO/MOZZO LANCIA LAVAGGIO<br>SUPPORT/HUB FOR WASH-ARM<br>HALTER/NABE FÜR SPÜLLANZE<br>SUPPORT/MOYEU RAMPE DE LAVAGE<br>SOPORTE/CUBO LANZA LAVADO | |
| 26 | EU80314 | DADO LANCIA LAVAGGIO GRIGIO<br>NUT, WASH-ARM GREY<br>SCHRAUBENMUTTER, SPÜLLANZE GRAU<br>ECROU RAMPE DE LAVAGE GRIS<br>VER CODIGO 926128 | |

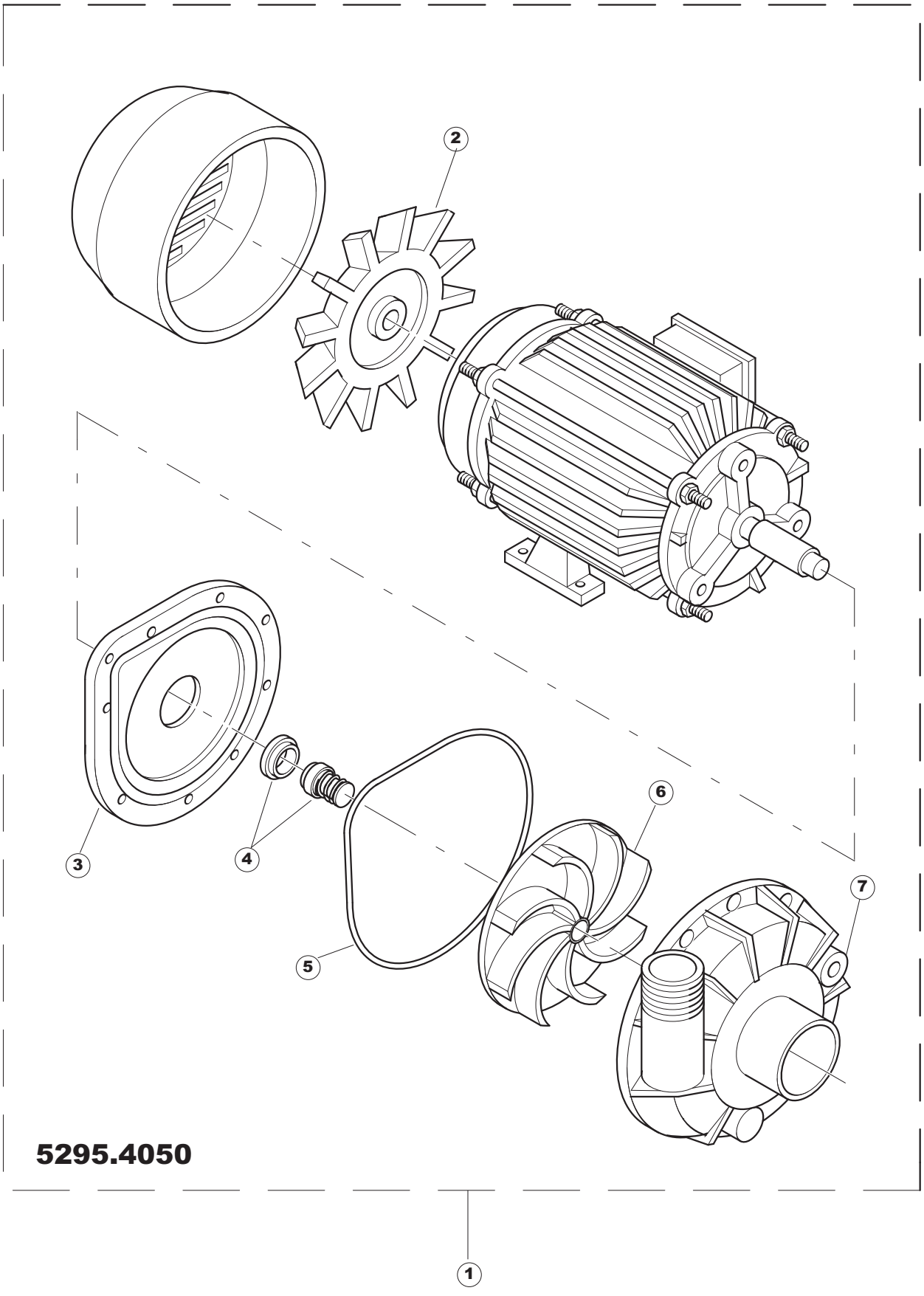
2
3
4
5
6
7
1
5295.4050

# Listino componenti per pagina 7

| | | | |
|---|---|---|---|
| 1 | EU80115 | EL.P 1,6KW 230-400V/50HZ (5295.5050)<br>MOTORPUMP 1,6KW 230-400V/50HZ (5295.5050)<br>ELEKTROPUMPE 1,6KW 230-400V/50HZ (5295.5050)<br>EL.P 1,6KW 230-400V/50HZ (5295.5050)<br>ELECTROBOMBA 1,6KW 230-400V/50HZ (5295.5050) | |
| 2 | EU80123 | VENTOLA E. POMPA (5295.4050)<br>FAN, MOTORPUMP (5295.4050)<br>GEBL., ELEKTROPUMPE (5295.4050)<br>VENT. ELECTROPOMPE (5295.4050)<br>ROTOR E. BOMBA (5295. 4050) | |
| 3 | EU80122 | FLANGIA CON SCUDO<br>PUMP FLANGE (5295.4050)<br>FLANSCH PUMPE (5295.4050)<br>FLASQUE POMPE (5295.4050)<br>BRIDA CON SCUDO E.BOMBA (5295.4050) | |
| 4 | EU80121 | TENUTA ROTANTE POMPA(AB122414B/AC1326B<br>SEAL, REVOLVING, PUMP(AB122414B/AC1326B<br>DICHTUNG, ROTIER. - PUMPE(AB122414B/AC1326B<br>JOINT PIVOTANT POMPE(AB122414B/AC1326B<br>ESTANQ. ROTOR BOMBA(AB122414B/AC1326B | |
| 5 | EU80120 | GUARNIZIONE EL-POMPA (5295.4050)<br>GASKET, EL.PUMP (5295.4050)<br>DICHTUNG, EL.PUMPE (5295.4050)<br>JOINT ELECTROPOMPE (5295.4050)<br>JUNTA ELECTROBOMBA (5295. 4050) | |
| 6 | EU80119 | GIRANTE E-POMPA (5295.4050)<br>ELECTR.PUMP IMPELLER (5295.4050)<br>LAUFRAD ELEKTROPUMPE (5295.4050)<br>ROUE ELECTROPOMPE (5295.4050)<br>ROTOR E-BOMBA (5295. 4050) | |
| 7 | EU80118 | CHIOCCIOLA EL-POMPA (5295.4050)<br>ELECTROPUMP HOUSING<br>PUMPENGEHAEUSE<br>VOLUTE POUR ELECTROPOMPE<br>ESPIRAL EL-BOMBA (5295.4050) | |