Electrolux

SPARE PARTS CATALOGUE
CATALOGO PARTI DI RICAMBIO

PENTOLE GAS DIRETTE 100/150Lt E900XP
GAS BOILING PAN DIRECT HEATING 100/150Lt E900XP

PNC	Model	Ref	Pag.	Brand	Version	Notes
391106	E9BSGHDPF0	a	1…6	ELX	GAS	100LT
391107	E9BSGHDRF0	b	1…6	ELX	GAS	150LT
392106	Z9BSGHDPF0	c	1…6	ZAN	GAS	100LT
392107	Z9BSGHDRF0	d	1…6	ZAN	GAS	150LT
392108	Z9BSGHDRFC	e	1…6	ZAN	GAS	150LT AUTOCLAVE
393106	A9BSGHDPF0	f	1…6	OEM	GAS	100LT
393107	A9BSGHDRF0	g	1…6	OEM	GAS	150LT

Pag	Index	Indice	Note
2	General components	Componenti struttura	
3	Cover components	Componenti coperchio	
4	Gas components	Componenti Gas	
5	Pilot / Burner Nozzle	Tabelle ugelli	
6	Electric components	Componenti elettrici	
7,8,9	Spare parts list	Lista ricambi	

Brand/Marchio: All
Factory code: 9PDX

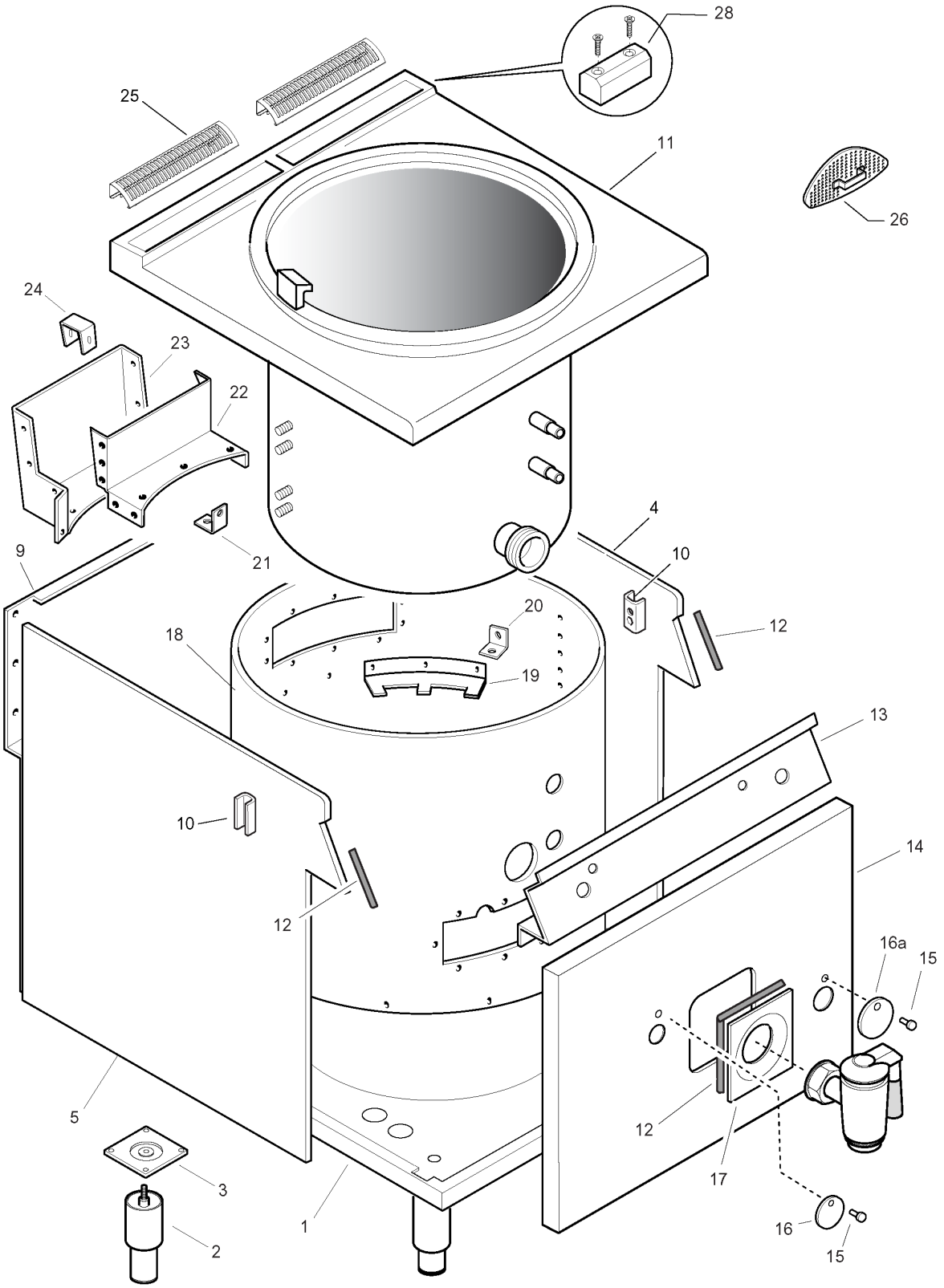

From sr. Nr/ Da Ser. Nr.: 116 Page: 2 Ed. 2013 05		Doc. Nr.: **059785GF00**

Model All

Table 59785GF00 Page 2 General components

Pos.	Spare Part	Alias Code	Repl. by	S	Info	Kit	Techn. Bulletin	Description	Notes
0001	000000	050489KC00							100 LT
0001	000000	050489KD00							150 LT
0002	0C0204	0835856900						FOOT; Ø=50,5MM; PIN M10; AISI 304	
0003	0TTG45	050589CD00			D			FOOT REINFORCEMENT	
0004	000000	085089JC00							ELX
0004	000000	085089JF00							ZAN, OEM
0005	000000	085089JG00							ZAN, OEM
0005	0C8181	085089JD00			D			LEFT SIDE	ELX
0009	000000	0538844801							
0010	0C0156	0527850500						BRACKET	
0011	0C7541	087089B400	0CA968		D			PAN; COMPLETE	ELX
0011	0C7542	087089B500	0CA980		D			PAN; COMPLETE	ELX
0011	0C7550	087089FP00	0CA983		D			PAN; COMPLETE	ZAN, OEM
0011	0C7551	087089FQ00	0CA972		D			PAN; COMPLETE	ZAN, OEM
0011	0C7552	087089FR00	0CA973		D			PAN; COMPLETE	ZAN
0012	0C2496	0543821900		S				GASKET; CONTROL PANEL; BY METER; GREY	
0013	0C7536	085089BR00						COVERING PLATE	ELX
0013	0C7560	087089GX00	0CA195					BURNER	ZAN
0013	0C8059	050389PT00						CONTROL PANEL	OEM
0014	0C7806	050389Y000			D			FRONT PANEL	150 LT
0014	0C8053	050389XZ00			D			FRONT PANEL	100 LT
0015	026187	0214473001						PIN	
0016	002534	0508837201						DOOR	
0017	0C0709	0529845500						PANEL	150 LT
0018	000000	0524882501							150 LT
0018	000000	0524882701							100 LT
0019	000000	0528820403							
0020	000000								
0021	0C0814	0508818601						BRACKET	
0022	000000	0524883002							150 LT
0022	000000	0524884902							100 LT
0023	000000	0524883101							150 LT
0023	000000	0524885001							100 LT
0024	0C8199	0527841202			D			CHIMNEY SPACER	
0025	0C5624	0538841900	0C7333					CHIMNEY GRID; L=400 MM	ZAN, OEM
0025	0C7333	050389LP00		S				CHIMNEY GRID; L=400MM	ELX

Model	All								
Table	59785GF00	Page	2	General components					
Pos.	**Spare Part**	**Alias Code**	**Repl. by**	**S**	**Info**	**Kit**	**Techn. Bulletin**	**Description**	**Notes**
0026	027114	0310122725						GRILL	
0028	0C0137	0516860702				+		PLATE	
016a	0C1563	0527843000						SPORTELLINO D'ISPEZIONE	

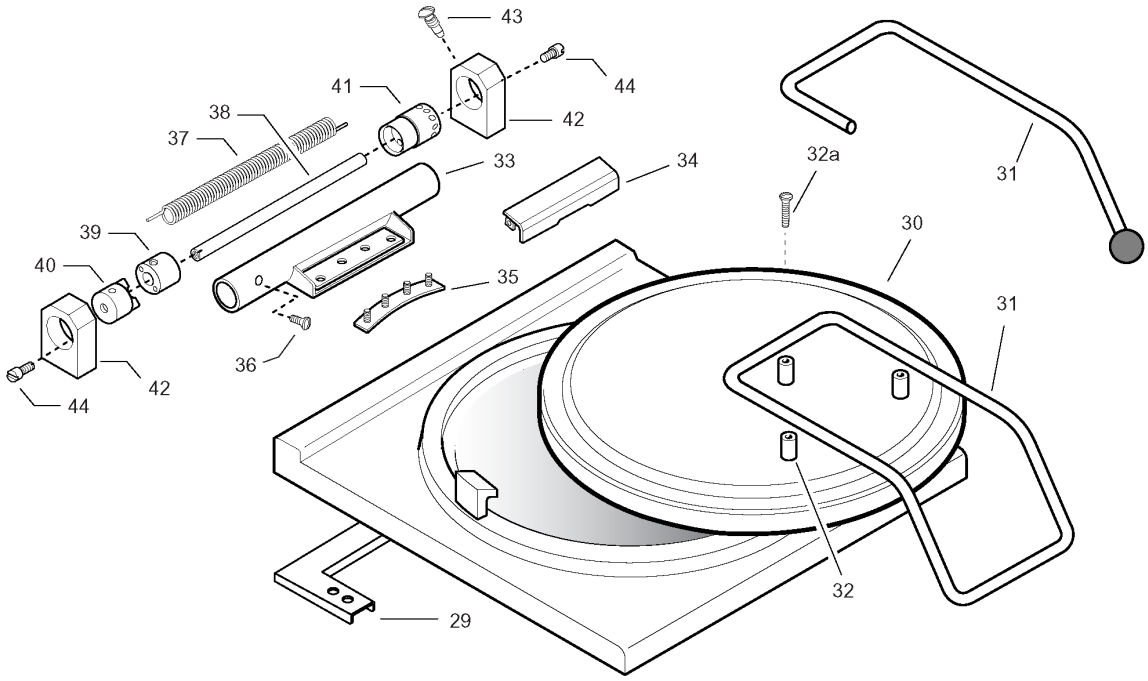
43
44
41
42
38
37
33
34
32a
31
39
30
40
35
31
36
42
44
32
29

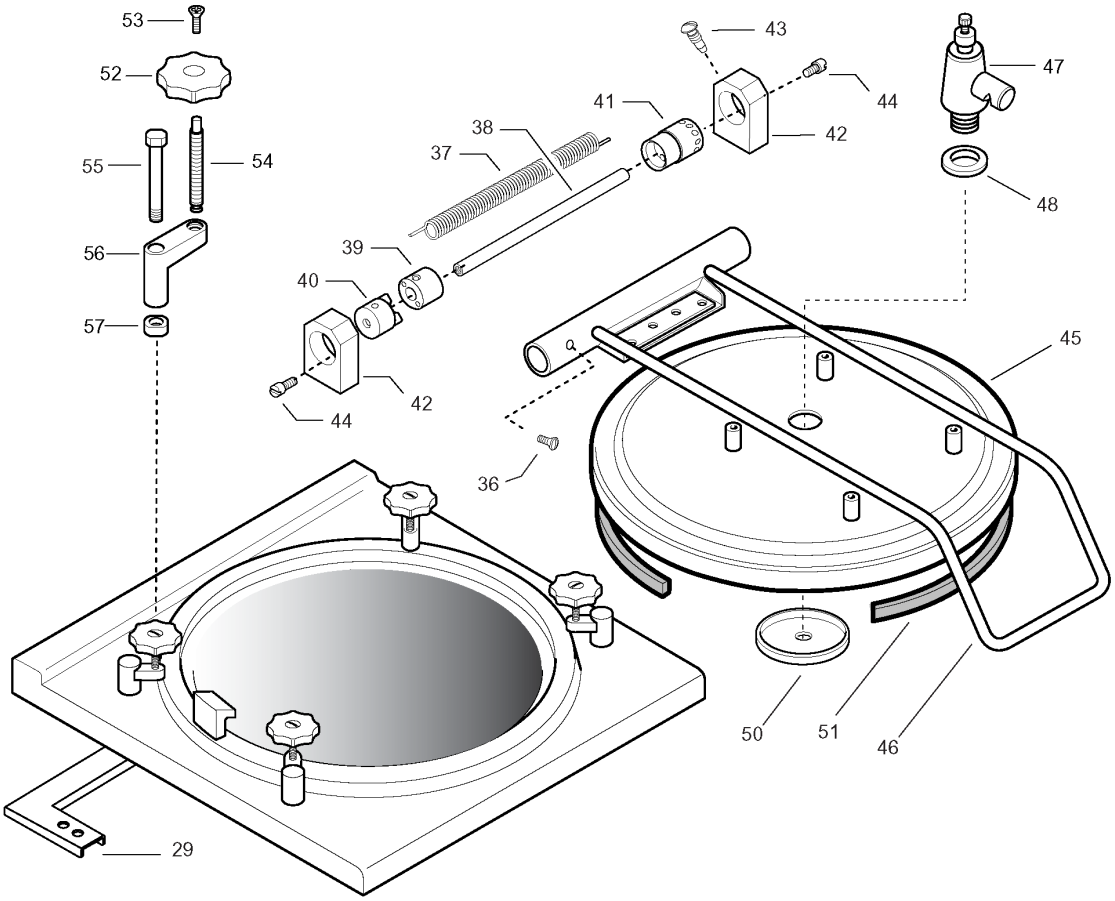
53
52
43
47
44
41
38
42
55
54
37
48
56
39
40
57
45
42
44
36
50
51
46
29

Model	All								
Table	59785GF00	Page	3	Cover components					

Pos.	Spare Part	Alias Code	Repl. by	S	Info	Kit	Techn. Bulletin	Description	Notes
0029	0C0713	0800833300						REINFORCEMENT	
0030	0C0714	0873838102		S				LID	
0031	0C0691	0517876502						HANDLE	ZAN, OEM
0031	0C2072	0853891400						HANDLE; ASSY	ELX
0032	004468	0517856900		S				SPACER	
0033	006181	0800814505						SUPPORT	
0034	006902	0800823302						BACK PANEL	
0035	006925	0805878802						LID REINFORCEMENT	
0036	0C2776	0217224125	0C2777					SCREW; M6X12 UNI 6110 AISI 304	
0037	002981	0516804700		S				SPRING	AUTOCLAVE
0037	059518	0514894501						SPRING	
0038	059862	0514894802						AXIS; ØE=16MM; L=437MM	
0039	002982	0516804500		S				STOPPING	
0040	059864	0514894303						BLOCK; FOR HINGE	
0041	002983	0516804601		S				BLOCK; STAINLESS STEEL	
0042	002944	0514894603						HINGE SUPPORT	
0043	059859	0514895003						SCREW: M6	
0044	059860	0514894701						SCREW	
0045	059866	0874849408						LID	
0046	0C0742	0831807503	0C7923					HANDLE	
0047	052623	0835801801						FUME EXHAUST VALVE; 1/2" M	
0048	027300	0246173500						GASKET	
0050	025220	0204751902						CAP	
0051	0C0433	0569805200	0C4230			Kit		GASKET; 1PC=3000MM	
0052	010142	0315280901						KNOB	
0053	010147	0214063000						SCREW	
0054	052616	0514802301						PIN	
0055	052614	0514802002						DUMMY SCREW	
0056	052612	0511800201						ARM	
0057	003363	0167098086						LUBRICANT; 500ML; UNI1950 II AEROSOLS	
0057	052615	0514802201						RING NUT	
032a	0C0950	0217223605		S				SCREW; TSC; M5X60; AISI 304	

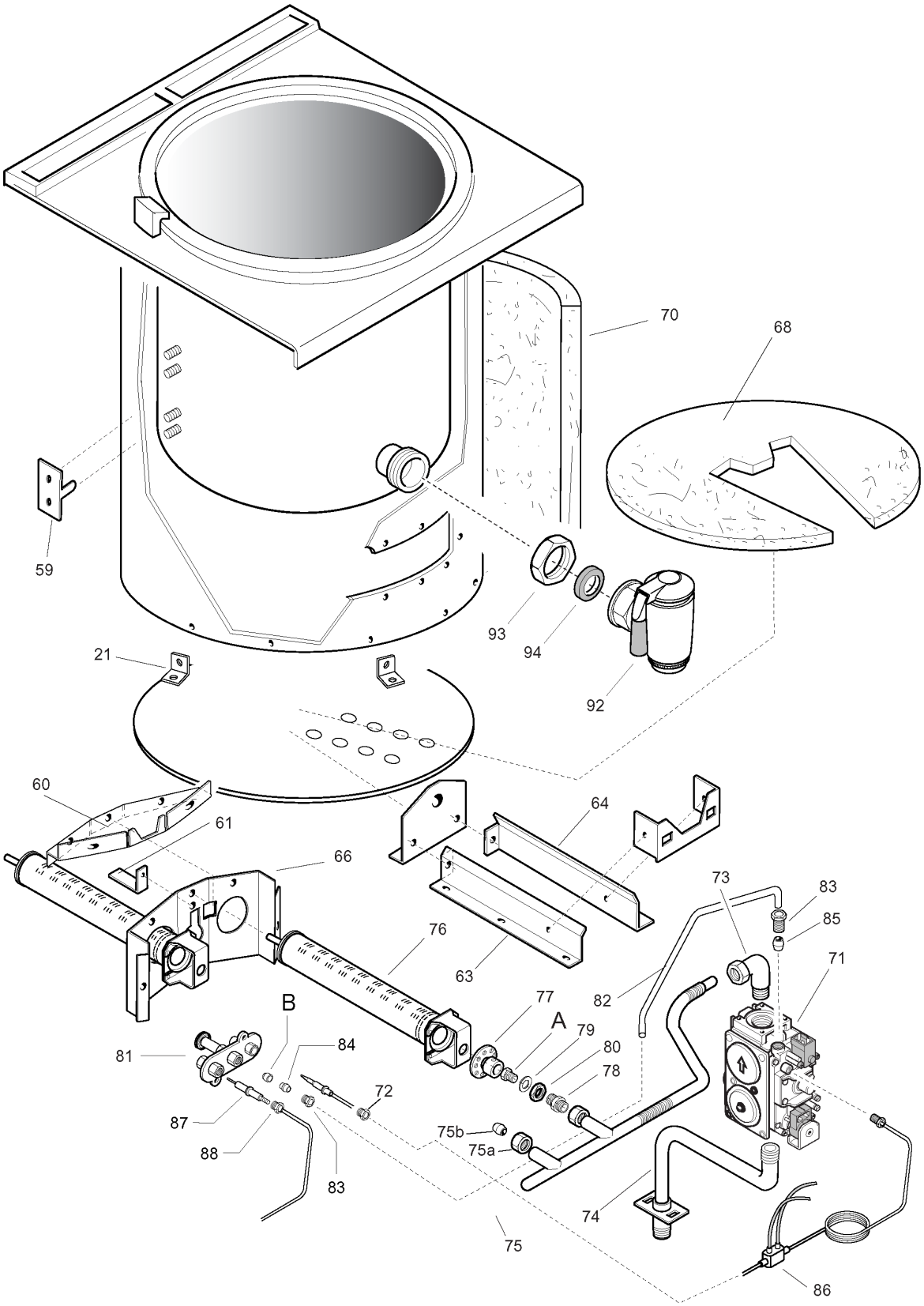

From sr. Nr/ Da Ser. Nr.: 116 Page: 4 Ed. 2013 05		Doc. Nr.: **059785GF00**

Model	All								
Table	59785GF00	Page	4	Gas components					

Pos.	Spare Part	Alias Code	Repl. by	S	Info	Kit	Techn. Bulletin	Description	Notes
0021	000000								
0059	000000	0527853301							
0060	0C6248	0529894501		S	D			COVER PLATE; FOR BURNER	
0061	0C4928	0527841101						PROTECTION PILOT BURNER	
0063	000000	0528848601							
0064	000000	0528848501							
0066	0C6247	0529894402			D			PANEL; FOR SUPPORT BURNER	
0068	0C6508	0560841501						INSULATOR	
0070	000000	0560844703							100 LT
0070	0C6430	0560844801			D			INSULATING PANEL	150 LT
0071	002903	0835819901						GAS VALVE; 820 NOVA 1/2"FF	
0072	052125	0214164400						PIPE FITTING; M10X1; HOLE DIAM.4MM	
0073	006622	0517866200						PIPE FITTING	
0074	0C6379	0805899H03						GAS INLET PIPE	
0075	0C6366	0805899J02						GAS FEED PIPE	150 LT
0075	0C6378	0805899L01						GAS FEED PIPE	100 LT
0076	0C0743	0830894702		S				BURNER; 13,3 KW	
0077	054039	0830828001						AERATOR	
0078	054118	0514829700						NOZZLE	
0079	054029	0506833401						GASKET	
0080	020997	0214105101						LOCK NUT	
0081	0C0744	0830897501		S				PILOT BURNER	
0082	0C8066	0517880401						PIPE	
0082	0C8067	0517880302						PIPE	
0083	052125	0214164400						PIPE FITTING; M10X1; HOLE DIAM.4MM	
0084	052127	0215199700						DOUBLE CONE; DIA 4MM	
0085	053665	0515827401						DOUBLE CONE; DIAM.=4MM	
0086	0C3162	0831818901		S	A			INTERRUPTED THERMOCOUPLE; ORKLY 16400-35	
0087	052610	0330272401						SPARK PLUG; DIA 6X44 MM	
0088	057960	0214164101						PIPE FITTING; SPARK PLUG	
0092	0S0950	0856841701	0S2227					DRAIN TAP; 2"	
0093	0C0716	0516861001	0C8742					LOCK NUT	
0094	000000								
075a	041155	0214108111						NUT	
075b	060325	0215073101						DOUBLE CONE; ØE=12MM; ØI=10 MM; L=7,5MM	

A - Ugello bruciatore / Burner nozzle 100LT			
6DGT Code	**Ref. / Notes**		
059363	ø2.50	2H/2E+	G20 20mbar
0C0747	ø2.70	2ELL	G25 20mbar
002268	ø2.60	2L	G25 25mbar
054127	ø1.65	3+3B/P	G30/31 28-30/37mbar
056470	ø1.45	3B/P	G30/31 50mbar
054034	ø3.00	No CE	G20 10mbar

A - Ugello bruciatore / Burner nozzle 150LT			
6DGT Code	**Ref. / Notes**		
002268	ø2.60	2H/2E+	G20 20mbar
006419	ø2.90	2ELL	G25 20mbar
003371	ø2.75	2L	G25 25mbar
003723	ø1.75	3+3B/P	G30/31 28-30/37mbar
003722	ø1.55	3B/P	G30/31 50mbar
054084	ø3.00	No CE	G20 10mbar

B - Ugello pilota / Pilot nozzle			
6DGT Code	**Ref./ Notes**		
053670	n°41	2H/2E+	G20 20mbar
053670	n°41	2ELL	G25 20mbar
053670	n°41	2L	G25 25mbar
053667	n°30	3+3B/P	G30/31 28-30/37mbar
053667	n°30	3B/P	G30/31 50mbar
053670	n°41	No CE	G20 10mbar

Model	All								
Table	59785GF00	Page	5	Pilot / Burner Nozzle					

Pos.	Spare Part	Alias Code	Repl. by	S	Info	Kit	Techn. Bulletin	Description	Notes
0000	002268							NOZZLE	
0000	003371							NOZZLE	
0000	003722			S				NOZZLE	
0000	003723			S				NOZZLE; Ø=1,75	
0000	006419			S				NOZZLE	
0000	053667							PILOT NOZZLE; N°30; GPL	
0000	053670							PILOT NOZZLE; N.41 GN	
0000	054034							NOZZLE; DIA.3,00	
0000	054084							NOZZLE	
0000	054127			S				NOZZLE	
0000	056470							GAS NOZZLE; DIA 1,45	
0000	059363							NOZZLE	
0000	0C0747							NOZZLE; DIA. 2,70	

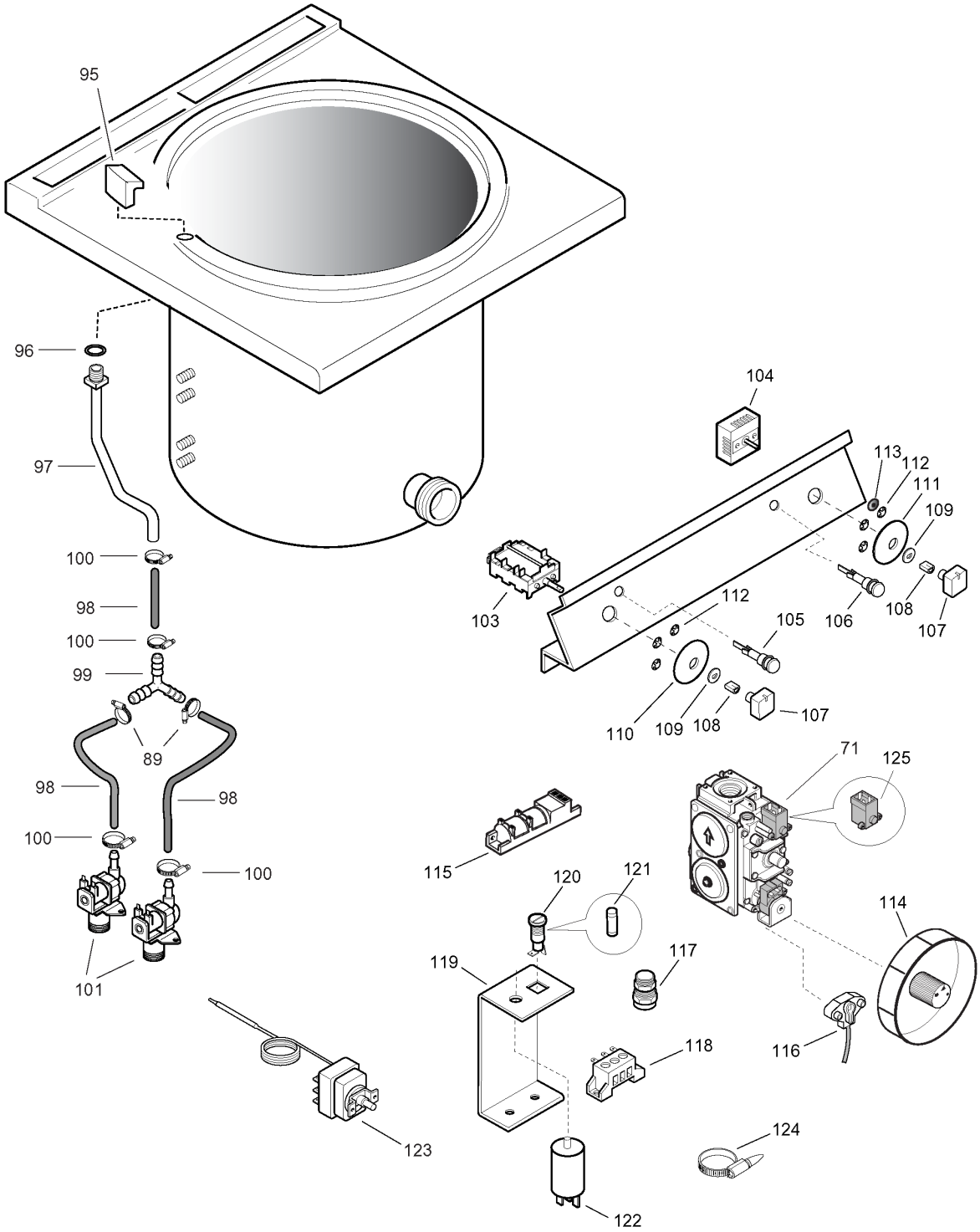

From sr. Nr/ Da Ser. Nr.: 116 Page: 6 Ed. 2013 05	Doc. Nr.: **059785GF00**

Model	All								
Table	59785GF00	Page	6	Eletric components					
Pos.	**Spare Part**	**Alias Code**	**Repl. by**	**S**	**Info**	**Kit**	**Techn. Bulletin**	**Description**	**Notes**
0071	000000								
0089	000000								
0095	051521	0211794613						DISTRIBUTOR	
0096	052779	0543800600		S				O-RING; ØI=20,35X1,78 MM	
0097	0C6107	0830896400						WATER PIPE	
0098	002707	0140068008					PDD2005-18	ARMORED RUBBER HOSE; BY METER	
0099	047431	0544615700						CONNECTION 3 WAY	
0100	007019	0835823600	048126					HOSE CLAMP	
0101	0C3254	0696805700		S	A			SOLENOID VALVE; 1 WAY; 180°;230V 50-60HZ	
0103	059544	0641802400						COMMUTATOR; 4 POS.	
0104	0C1605	0699802200		S	A			ENERGY REGULATOR	
0105	0C0687	0876800201		S	A			PILOT LAMP ASSY; RED	
0106	005010	0876800002						GREEN PILOT LAMP ASSY; ROUND; 230V	
0107	0A5621	0548865500		S				KNOB; Ø PIN=6MM	OEM
0107	0C3218	0548864302						KNOB	ELX
0107	0C3218	0548864302						KNOB	OEM
0107	0C3218	0548864302						KNOB	ZAN
0107	0C6670	0511850G01	0C8700			+		KNOB; DIA.10	ELX
0107	0C7232	0548878201		S				KNOB; DIA.6	ZAN
0107	0C7345	0548877V00		S				KNOB ADAPTER	ELX
0108	025245	0214590701		S				KNOB SPRING	
0109	053816	0543821000						GASKET; ØI=4,5MM; ØE=14MM; H=3MM	
0110	0C7526	0548877B00						RING NUT	ELX
0110	0C7531	0548879J00						RING NUT	AUTOCLAVE
0110	0C7532	0548879M00						RING NUT	ZAN, OEM
0111	052615	0514802201						RING NUT	AUTOCLAVE
0111	0C7230	0548877G00		S				RING NUT	ELX
0111	0C7246	0548879T00						RING NUT	OEM
0111	0C7246	0548879T00						RING NUT	ZAN
0112	069567	0218912211	0C6288					RING CONNECTION	
0113	053816	0543821000						GASKET; ØI=4,5MM; ØE=14MM; H=3MM	
0114	0C3218	0548864302						KNOB	
0115	004240	0624804700						IGNITER UNIT; 2-WAYS	
0116	054539	0830831400						MICROSWITCH; FOR GAS VALVE	
0117	0C2328	0544802200						FIXING CABLE	
0118	046357	0639804900						TERMINAL BOARD;3POLE; TYPE TIPO FV 110B	

Model	All								
Table	59785GF00	Page	6	Eletric components					
Pos.	**Spare Part**	**Alias Code**	**Repl. by**	**S**	**Info**	**Kit**	**Techn. Bulletin**	**Description**	**Notes**
0119	000000	0527842302							
0120	056582	0652800401						FUSE HOLDER	
0121	057783	0452140500						FUSE; 5X20; 4A-250V	
0122	046217	0694601000						RIF FILTER	
0123	0C1000	0646813300		S	A			THERMOSTAT; 210'C (0-16)	
0124	0C0717	0639810200						CLIP	
0125	0K3020			S	A			COIL; 220/240V 50HZ	