FAGOR

SPARE PARTS CATALOGUE
ERSATZTEILKATALOG
CATALOGUE PIECES DETACHEES
CATALOGO PARTI RICAMBIO
CATALOGO DE PIEZAS DE RECAMBIO
CATALOGO PECAS DE REPOSICAO

LP 61H

08-07-2009

LP 61H

Tav.1: Carrozzeria
Tav.2: Impianto elettrico
Tav.3: Componenti in vasca
Tav.4: Circuito di lavaggio
Tav.5: Circuito di risciacquo
Tav.6: Lance di lavaggio
Tav.7: Pompa di lavaggio

Tav.1: Machine body
Tav.2: Electrical components
Tav.3: Components in the tank
Tav.4: Washing circuit
Tav.5: Rinsing circuit
Tav.6: Washing arms
Tav.7: Washing pump

Tab.1: Carrocería
Tab.2: Instalación eléctrica
Tab.3: Componentes en cuba
Tab.4: Circuito de lavado
Tab.5: Circuito d'enjuague
Tab.6: Brazos de lavado
Tab.7: Bomba de lavado

Tab.1: Carrosserie
Tab.2: Installation électrique
Tab.3: Composants de cuve
Tab.4: Circuit de lavage
Tab.5: Circuit de rinçage
Tab.6: Bras de lavage
Tab.7: Pompe de lavage

Taf.1: Verkleidung
Taf.2: Elektrische Anlage
Taf.3: Bauteile im Waschtank
Taf.4: Spuelschaltung
Taf.5: Nachspuelschaltung
Taf.6: Wascharme
Taf.7: Spuelpumpe

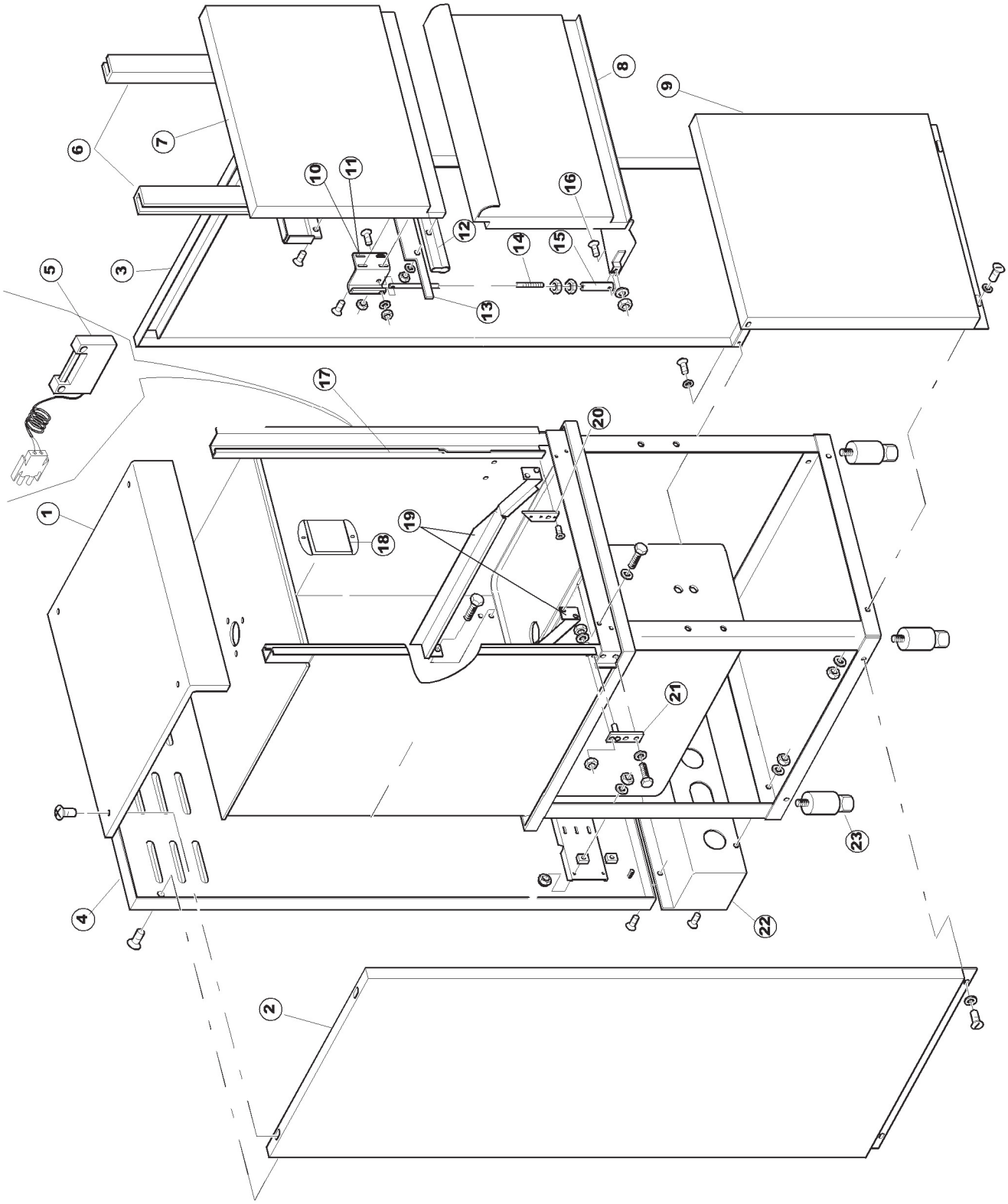
1
2
3
4
5
6
7
8
9
10
11
12
13
14
15
16
17
18
19
20
21
22
23

1	41118	PANNELLO SUPERIORE PER LAVAPENTOLE UPPER PANEL FOR POT AND PAN WASHER PANEEL - OBEN - FUER KOCHTOEPFESPUELER PANNEAU SUPERIEUR POUR LAVE-CASSEROLES	
2	44110	PANNELLO LATERALE SINISTRA PER LAVAPENTO SIDE PANEL -LEFT- FOR POT AND PAN WASHER SEITLICHES PANEEL, LINKS - FUER KOCHTOEP PANNEAU LATERAL GAUCHE POUR LAVE-CASSERO	
3	44114	PANNELLO LATERALE DESTRO PER LAVAPENTOLE SIDE PANEL, RIGHT - FOR POT AND PAN WASH SEITLICHES PANEEL -RECHTS- FUER KOCHTOEP PANNEAU LATERAL DROIT POUR LAVE-CASSEROL	
4	44122	PANNELLO POSTERIORE SUPERIORE PER LAVAPE REAR UPPER PANEL FOR POT AND PAN WASHERS HINTERPANEEL - OBEN, FUER KOCHTOEPFESPUE PANNEAU ARRIER SUPERIEUR POUR LAVE-CASSE	
5	211002AG	CONTATTO MAGNETICO MAGNETIC DOOR SWITCH TUERKONTAK SCHALTER CONTACT MAGNETIQUE	
6	44265	GUIDA PORTA DOOR SLIDING GUIDE TUER-GLEITENDER BAHN - OBEN - GUIDE GLISSANTE PORTE	
7	44260	PORTA DOOR TUER PORTE	
8	44250	PORTA DOOR TUER PORTE	
9	41124	PANNELLO ANTERIORE LP101-105 COMPLETO PANNELLO ANTERIORE LP101-105 COMPLETO	
10	4108701	SQUADRA DESTRA AGGANCIO TIRANTE RIGHT BRACKET FOR UPPER DOOR TIE ROD RECHT-HATER FUER ANKUPPELN DER OBEREN EQUERRE DROITE ACCROCHAGE TIRANT	
11	4108801	SQUADRETTA SINISTRA AGGANCIO TIRANTE LEFT BRACKET FOR UPPER DOOR TIE ROD LINK-HALTER FUER ANKUPPELN OBEREN EQUERRE DROITE ACCROCHAGE TIRANTE PORTE	
12	41247	GUARNIZIONE SPORTELLO LAVAPENTOLE POT AND PAN WASHER DOOR PACKING DICHTUNG FUER TUER DER KOCHTOEPFESPUELER JOINT PORTE LAVE-CASSEROLES	
13	41197	SUPPORTO GUARNIZIONE SPORTELLO SUPERIORE DOOR PACKING SUPPORT - UPPER - FOR POT A HALTERUNG FUER TUERPACKUNG - OBEN FUER K SUPPORT JOINT PORTE SUPERIEURE POUR LAVE	
14	44593	TIRANTE PORTA DOOR LEVER HEBEL TUER MONT TIRANT PORTE	
15	41095	BOCCOLA SUPERIORE TIRANTE SPORTELLO PER UPPER BUSH FOR DOOR TIE FOR POT AND PAN OBERE BUCHSE FUER TUER-ZUGSTANGE FUER KO BOUCLE SUPERIEURE TIRANT PORTE POUR LAVE	
16	486078	VITE IN ACCIAIO INOSSIDABILE SPEC. STAINLESS STEEL SCREW 6MAX30 T.1/2 TC SCHRAUBE AUS NICHTROSTENDEM STAHL 6MAX30 VIS EN ACIER INOXYDABLE 6MAX30 T.1/2 TC	
17	929199	PIEDINO TIPO 30191.1.2 (NERO) FOOT TYPE 30191.1.2 (BLACK) FUSS TYP 30191.1.2 (SCHWARZ) VERRIN TYPE 30191.1.2 (NOIR)	

18	43527	PROTEZIONE GUARD SCHUTZVERKLEIDUNG PROTECTION	
19	41539	GUIDA CESTO RACK GUIDE KORBFUEHRUNG COULISSE PANIER	
20	4113501	SPESSORE LATERALE SPORTELLO DX/SX DOOR SIDE THICKNESS - DX/SX DICKUNG - SEITLICH - DER TUER - DX/SX EPAISSEUR LATERAL PORTE DX/SX	
21	4114501	PIASTRINA PERNO SPORTELLO PER LAVAPENTOL SMALL PLATE FOR DOOR PIN FOR POT AND PAN PLATCHEN FUER ZAPFEN TUER FUER KOCHTOEPF PLAQUE PETITE POUR PIVOT PORTE POUR LAVE	
22	41622	PANNELLO RETRO INFERIORE REAR PANEL RUECKWANDVERKLEIDUNG PANNEAU ARRIERE	
23	927006	PIEDE IN ACCIAIO INOSSIDABILE 2" M.H=85 STAINLESS STEEL FOOT 2" M.H=85 C/F+P.125 FUESS AUS NICHTROSTENDEM STAHL 2" M.H=85 VERRIN -ACIER INOXYDABLE 2" M.H=85 C/F+	

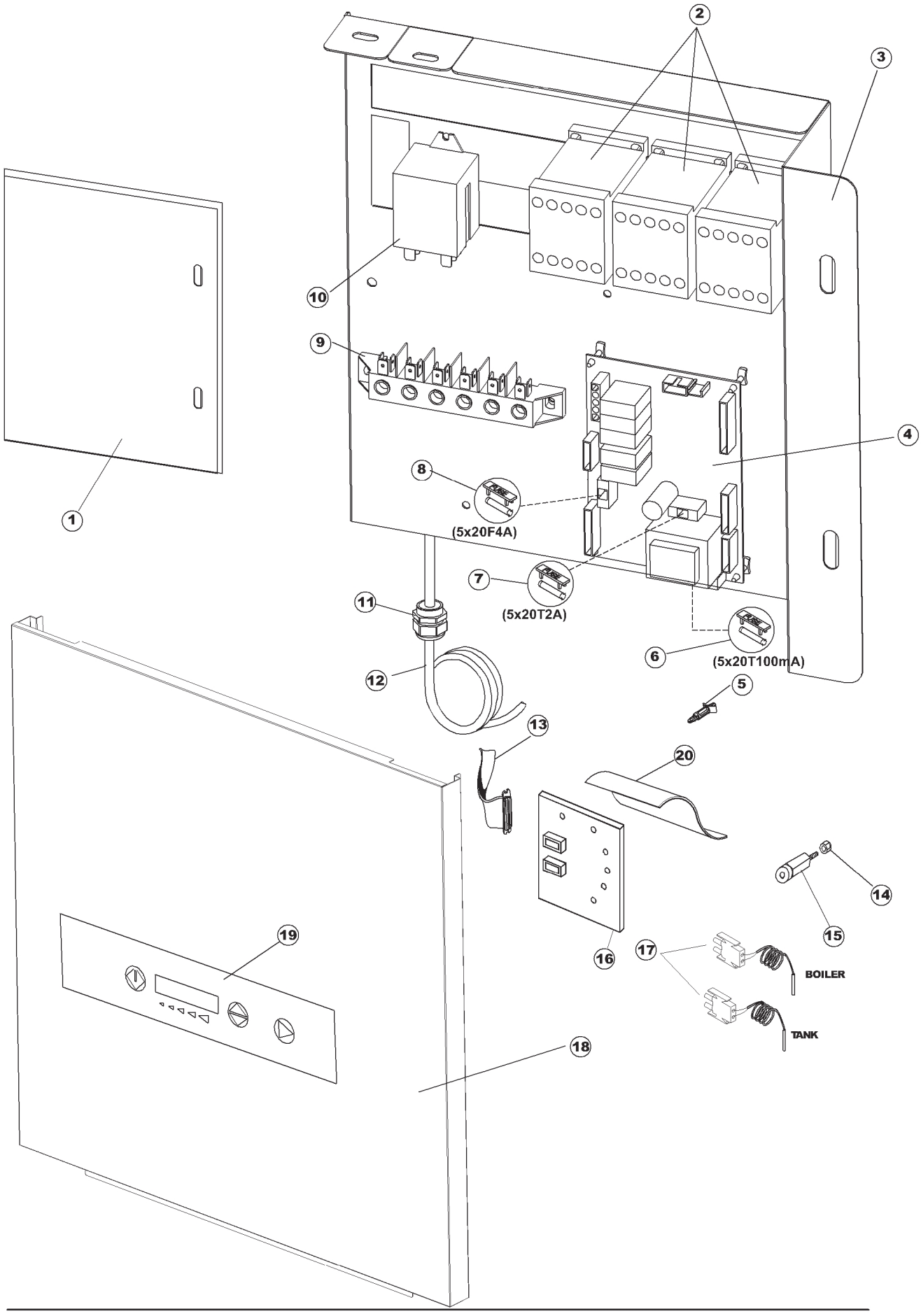
1
2
3
4
5
6
(5x20T100mA)
7
(5x20T2A)
8
(5x20F4A)
9
10
11
12
13
14
15
16
17
BOILER
TANK
18
19
20

Pagina 2

2	80350	CONTATTORE 230/50-60HZ CONTACTOR 230-50760HZ KONTAKT-GEBER 230-50/60HZ CONTACTEUR 230-50/60HZ	
4	215032	SCHEDA ELETTRONICA GET50 MAIN BOARD KARTE CARTE ELECTRONIQUE	
5	CWP2	PIEDINI SUPPORTO SCHEDA ELET.(ART.DRA6A) FOOT FUSS PIED	
6	228012	FUSIBILE 5X20 T100MA FUSE SICHERUNG FUSIBLE	
7	228011	FUSIBILE 5X20 T2A FUSE SICHERUNG FUSIBLE	
8	228004	FUSIBILE 5X20 4A FAST FUSE SICHERUNG FUSIBLE	
9	220011	MORSETTIERA 5 POLI CON MORSETTO DI MESSA 5 POLES TERMINAL BOARD WITH EARTHING TER FUENFPOLIGE KLEMMLEISTE + ERDUNGSKLEMME PLAQUE A BORNE 5 POLES AVEC BORNE DE TER	
10	929115	RELE 16A FIN 6282/230AC RELAY 16A 230V 6282 RELAIS 16A 230V 6282 RELAIS 16A 230V 6282	
11	DEP521	PRESSACAVO PG21 (BER 4721) CABLE-WEIGHT KABELBESCHWERER PRESSE-CABLE	
13	80933	CAVO FLAT COMANDI SUPERIORI CAPOT CABLE FLAT CAPOT KABEL FLAT TRISSE LIAISON	
14	417119	DADO M3 PLASTICA BIANCO NUT M3 NYLON MUTTER M3 NYLON ECROU M3 NYLON	
15	419036	DISTANZIALE M3 INTERFACE BOARD DISTANCE KEEPERS ABSTANDSROHR ENTRETOISE X CARTE ELECTRONIQUE	
16	80889	TASTIERA COMANDI CONTROL KEYBOARD BEDINGUNGEN-TESTENBRETT TABLEAU A POUSSOIRS COMMANDES	
17	231014	SONDA TEMPERATURA GET-5 TEMP. PROBE KUGEL SONDE	
18	41124	PANNELLO ANTERIORE LP101-105 COMPLETO PANNELLO ANTERIORE LP101-105 COMPLETO	
20	69810	TENDINA COPERTURA TASTIERA PANNELLO CURTAIN VORHANG RIDEAU	

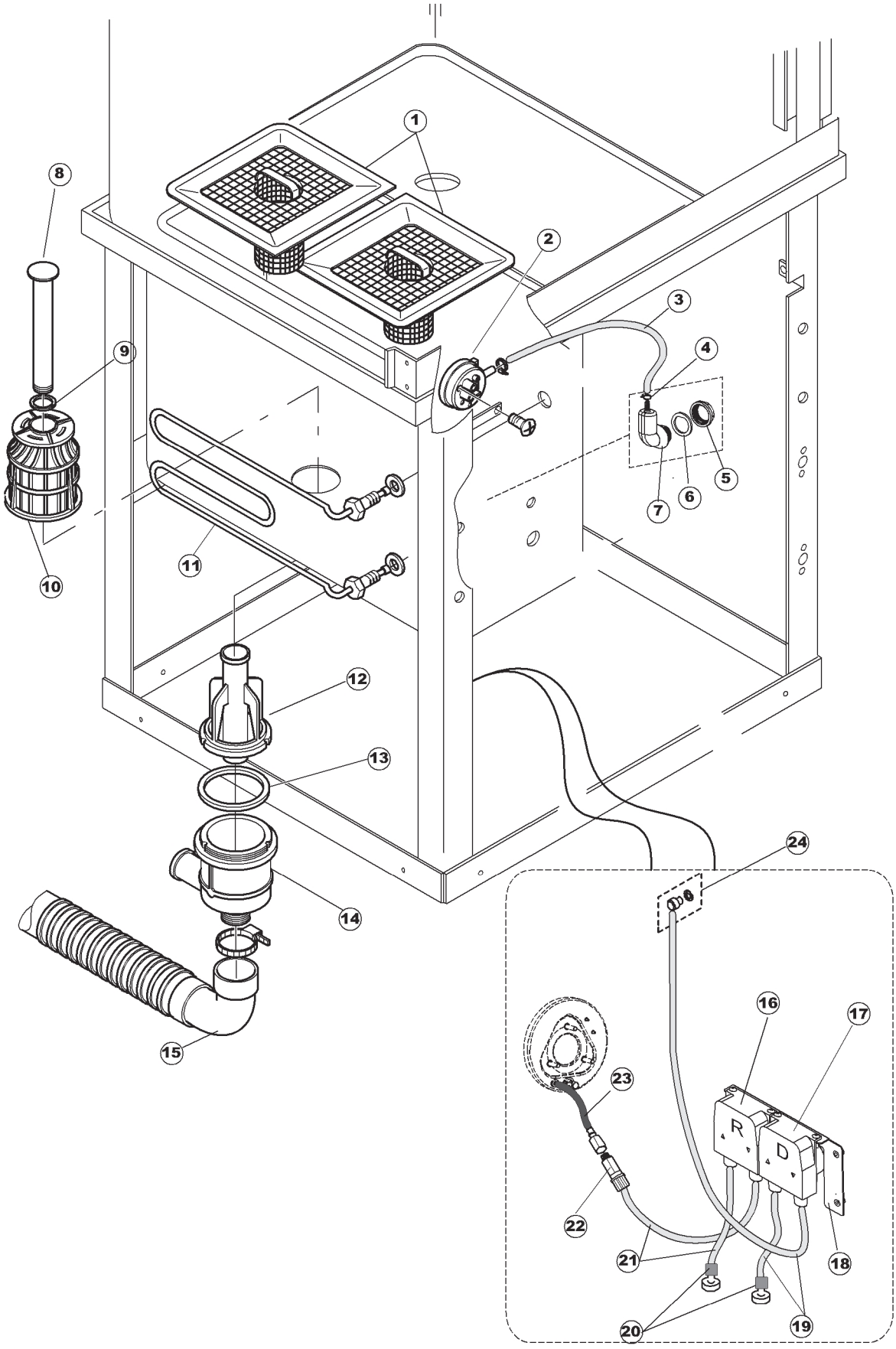
1
2
3
4
5
6
7
8
9
10
11
12
13
14
15
16
17
18
19
20
21
22
23
24
R
D

Pagina 3

1	41157	FILTRO VASCA COMPLETO PER LAVAPENTOLE TANK FILTER, ASSY FOR POT AND PAN WASHER TANKSIEB, KOMPLETT - FUER KOOCHTOEPFESPU FILTRE CUVE COMPLET, POUR LAVE-CASSEROLE	
2	926049	PRESSOSTATO TIPO 180-70 PRESSURE SWITCH TYPE 180-70 (S6533) DRUCKWAECHTER TYP 180-70 PRESSOSTAT TYPE 180-70	
3	143253	TUBO SILICONE 3X8 SILICON PIPE 3X8 SILIKONSCHLAUCH 3X8 TUYAU SILICONE 3X8	
4	CFF10073	FASCETTA A FILO 10073 COLLIER DE SERRAGE EN FIL D'ACIER 10073 SCHLAUGSCHELLE AUS DRAHT 10073 WIRE HOSECLAMP 10073	
5	417120	DADO PLASTICA GRIGIO PLASTIC NUT KUNSTSTOFFMUTTER 1-1/4 ECROU EN PLASTIQUE	
6	437098	GUARNIZIONE NUOVA CAMP.PRESS. PACKING FOR AIR TRAP OF PRESSURE SWITCH DICHTUNG FUER WINDKESSEL DES DRUECKWAEC JOINT PRISE D'AIRE PRESSOSTAT	
7	107012	CAMPANA PRESSOSTATO (L) RV40-50-CAPOTE AIR TRAP WINDKESSEL PRISE D'AIR	
8	80250	TROPPOPIENO OVERFLOW-PIPE UEBERLUAFROHR TROP PLEIN	
9	456016	GUARNIZIONE O-RING 32.50X3.60 PACKING O-RING 32.50X3.60 FOR SALT CONTA DICHTUNG O-RING 32.50X3.60 FUER SALZ- JOINT O-RING 32.50X3.60 POUR BOL A SEL	
10	121081	FILTRO PER POMPA LAVAGGIO PER LAVASTOVIG DRAIN PUMP FILTER FOR DISH-WASHER (S6639 SIEB FUER WASCH-PUMPE FUER GESCHIRR- SPU FILTRE POMPE DE LAVAGE POUR LAVE-VAISSEL	
11	80677	RESISTENZA VASCA 2500 W 230V MONOFASE HEATING ELEMENT 2,5KW 230V ELEKTRISCHER RESISTANCE	
12	80470	GHIERA SCARICO RING NUT GEWINDERING DOUILLE	
13	456040	GUARNIZIONE O-RING PER GRUPPO O-RING PACKING FOR SUCTION AND DRAIN UNI DICHTUNG O-RING FUER ABSAUGUNGS- UND AB- JOINT O-RING POUR GROUPE ASPIRATION/ VID	
14	136020	CORPO D'ASPIRAZIONE/SCARICO GRIGIO SCURO ASPIRATION AND DRAIN BODY ABSAUG-UND ABFLUSSKOERPER CORPS D'ASPIRATION/VIDANGE	
15	143136	TUBO DI SCARICO DRAIN HOSE ABFLUSSSCHLAUCH TUYAU DE VIDANGE	
16	209024	DOSAT.PERIST.BRILLANTANTE NON REG. PERISTALTIC DISPENSER PERISTALTISCHES DOSIERGERAET DOSEUR PERISTALTIQUE	Optional
17	209022	DOSAT.PERIST.DETERGENTE NON REG. PERISTALTIC DISPENSER PERISTALTISCHES DOSIERGERAET DOSEUR PERISTALTIQUE	Optional

18	80675	STAFFA DOSATORI PERISTALTICI BRACKET TRAGBUEGEL ETRIER	
19	143194	TUBO TRASPARENTE 4X6 TRANSPARENT HOSE 4X6 DURCHSICHTIGES ROHR 4X6 TUYAU TRANSPARENT 4X6	
20	121075	FILTRO PER POMPA DETERSIVO DETERGENT PUMP FILTER (S6754) SIEB FUER SPUELMITTELPUMPE FILTRE POUR POMPE DETERGENT	
21	H.775601	TUBO 4x6 CRISTAL BLUE (FX NUOVA) BLUE HOSE 4X6 LEITUNG 4x6 CRISTAL BLUE TUYAU 4x6 CRISTAL BLUE	
22	468200	RACCORDO ACCIAIO INOX AISI316 1/8" STAINLESS STEEL CONNECTION AISI316 1/8" ANSCHLUSSSTUECK AUS NICHTROSTENDEM STAHL RACCORD EN ACIER INOXYDABLE 1/8"	
23	143005	TUBO IN GOMMA TELATA 5X12 NERO LINEN RUBBER PIPE 5X12 - BLACK SCHLAUCH AUS LINENGUMMI 5X12 - SCHWARZ TUYAU EN CAOUTCHOUC LIN 5X12 NOIR	
24	468201	RACCORDO CALZATUBO PER INIEZ.BRILL. CONNECTION ANSCHLUSS RACCORD	

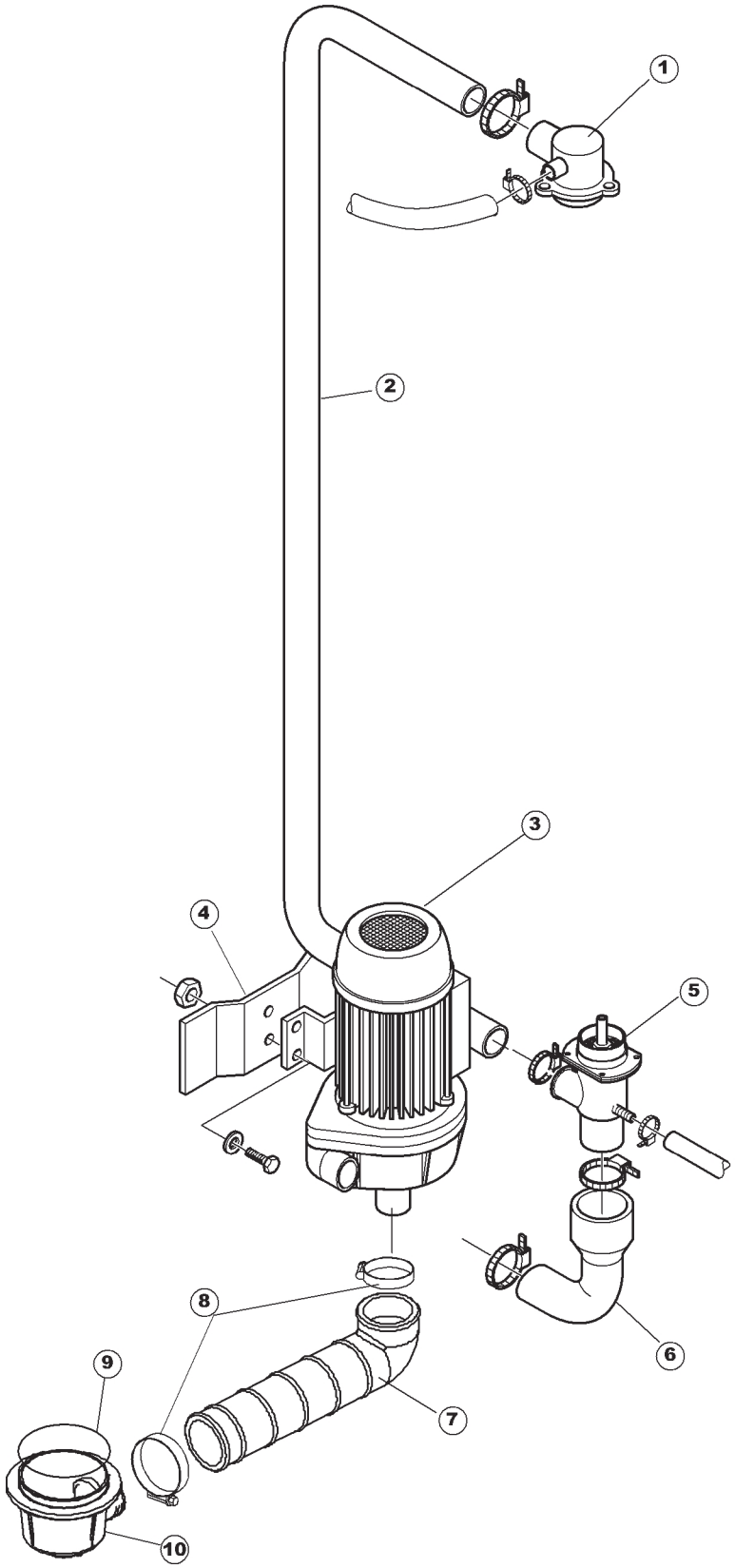
1
2
3
4
5
6
7
8
9
10

1	35602	CONDOTTA CENTRALE SUPERIORE LP92 MANIFOLD LP92 ZULAULEITUNG LP92 DURITE LP92	
2	44354	TUBO PIPE ROHR TUYAU	
3	41990	ELETTROPOMPA 2000W ELECTROPUMP 2 KW 230/400-50HZ CL F MOTORPUMPE 2 KW 230/400-50HZ CL F MOTOPOMPE 2 KW 230/400-50HZ CL F	
5	4206301	RACCORDO LANCIA DI LAVAGGIO INFERIORE PE WASH-ARM CONNECTION - LOWER - FOR POT AN ANSCHLUSSTUECK FUER WASCHARM - UNTEN - K RACCORD RAMPE DE LAVAGE INFERIEURE POUR	
6	41560	MANICOTTO COUPLING MUFFE MANCHON	
7	80186	MANICOTTO ASPIRAZIONE RUBBER ELBOW - SUPPLY SIDE ZUFUHRMUFFE - DRUCKSEITE MANCHON ASPIRATION	
8	CFS3	FASCETTA A VITE TORRO 60-80/12 SCREW-CLAMP TORRO 60-80/12 SCHRAUBE-SCHELLE TORRO 60-80/12 COLLIER A VIS TORRO 60-80/12	
9	456040	GUARNIZIONE O-RING PER GRUPPO O-RING PACKING FOR SUCTION AND DRAIN UNI DICHTUNG O-RING FUER ABSAUGUNGS- UND AB- JOINT O-RING POUR GROUPE ASPIRATION/ VID	
10	136020	CORPO D'ASPIRAZIONE/SCARICO GRIGIO SCURO ASPIRATION AND DRAIN BODY ABSAUG-UND ABFLUSSKOERPER CORPS D'ASPIRATION/VIDANGE	

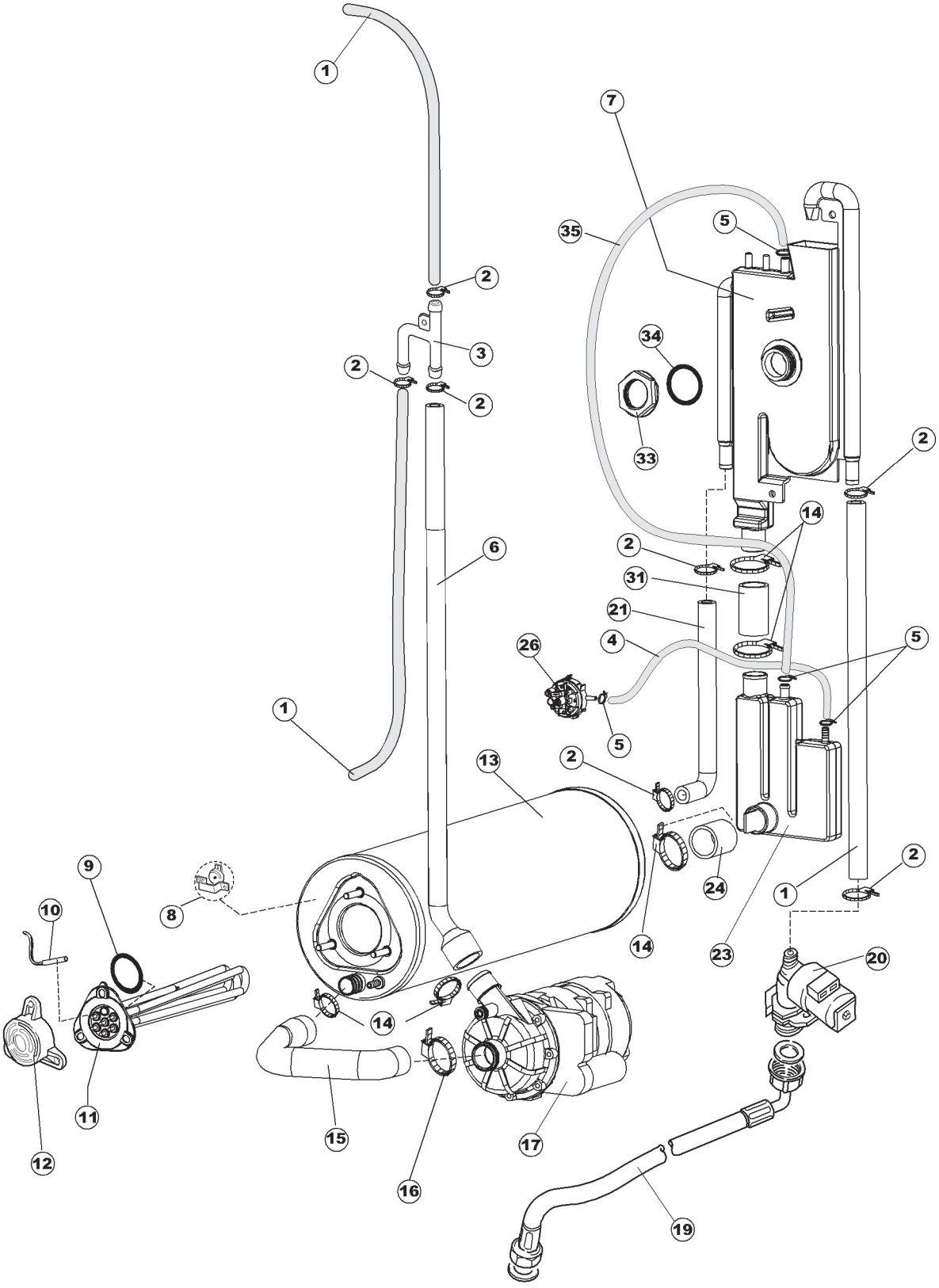
1
7
35
5
2
3
34
2
2
33
2
14
6
2
31
21
26
4
5
1
5
13
2
9
8
24
1
2
10
14
23
20
14
11
15
17
12
16
19

Pagina 5

1	143010	TUBO IN GOMMA 12X19,5 RUBBER PIPE 12X19,5 GUMMISCHALUCH 12X19,5 TUYAU EN CAOUTCHOUC 12X19,5	
2	927322	FASCETTA NASTRO 12-22 TAPE CLAMP 12-22 BANDSCHELLE 12-22 COLLIER POUR BANDE 12-22	
3	143173	GIUNZIONE DI RISCIACQUO Y-JUNCTION RINSE MANIFOLD Y-STUECK RACCORD DE RINCAGE	
4	143131	VEDI CODICE 143005 SEE CODE 143005 SIEHE KODE NR. 143005 VOIR CODE 143005	
5	423010	FASCETTA A VITE TORRO W2 8 -12/7 SCREW-CLAMP TORRO W2 8-12/7 SCHRAUBE-SCHELLE TORRO W2 8-12/7 COLLIER A VIS TORRO W2 8-12/7	
6	41525	TUBO MANDATA RISCIACQUO (CRP) RINSE DELIVERY TUBE(CRP) NACHSPUEL-FOERDERLEITUNG (CRP) TUYAU DE REFOULEMENT RINAAGE (CRP)	
7	144021	AIRGAP SPECIALE LA50 PLASTIC AIRGAP AIR GAP GEOFFNETER BEHAELTER AIRGAP SPECIAL LA50	
8	926189	TERMOSTATO DI SICUREZZA A CONTATTO (2360 CONTACT SAFETY-THERMOSTAT (REPLACES FORM KONTAKT-SICHERUNGSTHERMOSTAT (236039) THERMOSTAT DE SURETE' A CONTACT (236039)	
9	456002	O-RING PER RESISTENZA BOILER O-RING FOR BOILER RESISTANCE (S6218) O-RING FUER HEIZUNG DES WARMWASSER- BERE O-RING RESISTANCE SURCHAUFFEUR	
10	231014	SONDA TEMPERATURA GET-5 TEMP. PROBE KUGEL SONDE	
11	230083C	KIT RESISTENZA REB230083 (6KW) KIT OF HEATING ELEMENT REB230083 (6KW) KIT HEIZUNGEN REB230083 (6KW) KIT RESISTANCES REB230083 (6KW)	
12	467002	PROTEZIONE RESISTENZA BOILER BOILER HEATING ELEMENT PROTECTION HEIZUNGSCHUETZ DES WARMWASSERBEREITERS PROTECTION RESISTANCE BOILER	
13	104061	BOILER CRP LA50 BOILER CRP BOILER CRP SURCHAUFFEUR CRP	
14	CFS18	FASCETTA A VITE TORRO 20-32/9 CLAMP 20-32/9 SCHELLE COLLIER 20-32/9	
15	69068	MANICOTTO ASPIRAZ.CRP LA50 INTAKE COUPLING LA50 SAUGMUFFE LA50 MANCHON D'ASPIRATION	
16	423008	FASCETTA A VITE TORRO 25-40-/9 SCREW CLAMP TORRO 25-40/9 SCHRAUBE-SCHELLE TORRO 25-40/9 COLLIER A VIS TORRO 25-40/9	
17	80627	ELETTROPOMPA 200W 230V-1PH-50HZ PUMP PUMPE POMPE	

19	929169	TUBO DI CARICO TERMOPLASTICO VDE (3/4 X THERMOPLASTIC INLET HOSE VDE (A2096) THERMOPLASTISCHER ZULAUFSCHLAUCH VDE TUYAU DE CHARGEMENT THERMOPLASTIQUE VDE	
20	240018	ELETTROVALVOLA DI CARICO - 1 VIA CRP ONE-WAY "CRE" FILL SOLENOID VALVE "CRP" WASSERZUFUHR-EINWEGMAGNETVENTIL ELECTROVANNE D'ALIMENTATION "CRP"	
21	127098	MANICOTTO SFIATO BOILER CRP->BT COUPLING LA50 MUFFE LA50 MANCHON LA50	
23	144027	SISTEMA CARICAMENTO CRP PLASTIC AIRGAP AIR GAP GEOFFNETER BEHAELTER	
24	127095	MANICOTTO BOILER->SISTEMA CRP	
26	224002	PRESSOSTATO 110-60 PRESSURE SWITCH TYPE 110-60 DRUCKWAECHTER 110/60 PRESSOSTAT 110/60	
31	929171	TUBO IN GOMMA 20X30 RUBBER PIPE 20X30 GUMMISCHALUCH 20X30 TUYAU EN CAOUTCHOUC 20X30	
33	417125	DADO IN PLAST.CON COLLARE(171571) NUT MUTTER ECROU	
34	437104	GUARNIZIONE D45D33S2 EPDM 70SH RUBBER GASKET DICHTUNG JOINT	
35	143005	TUBO IN GOMMA TELATA 5X12 NERO LINEN RUBBER PIPE 5X12 - BLACK SCHLAUCH AUS LINENGUMMI 5X12 - SCHWARZ TUYAU EN CAOUTCHOUC LIN 5X12 NOIR	

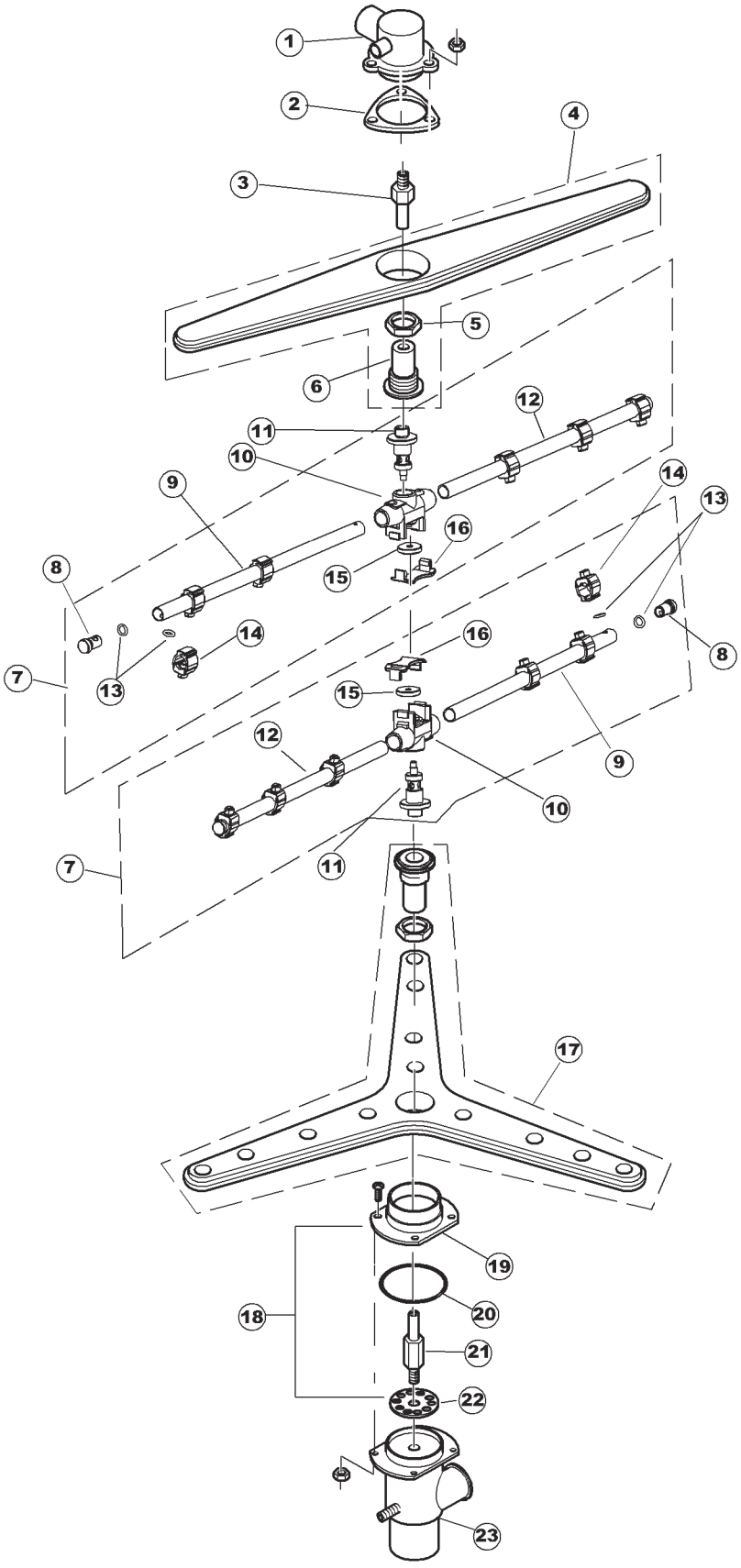
1
2
3
4
5
6
7
8
9
10
11
12
13
14
15
16
17
18
19
20
21
22
23

Pagina 6

1	35602	CONDOTTA CENTRALE SUPERIORE LP92 MANIFOLD LP92 ZULAULEITUNG LP92 DURITE LP92	
2	437064	GUARNIZIONE CONDOTTA CENTRALE SUPERIORE GASKET UPPER CENTRAL PIPELINE DICHTUNG FUER ZENTRALLEITUNG - OBEN - FU JOINT POUR CONDUITE CENTRALE SUPERIEURE	
3	80282	PERNO IN ACCIAIO INOSSIDABILE PER LANCIA PIVOT ZAPFEN PIVOT	
4	80311	PETTINE LAVAGGIO RIVER CAPOT WASH ARM SPUELARM BRAS LAV	
5	80314	VEDI CODICE 926128 SEE CODE 926128 SIEHE KODE 926128 VOIRE CODE 926128	
6	80310	SUPPORTO LANC/LAVAGGIO GRIGIO GREY WASH ARM JOURNAL BOX (RAL 7001) WASCHARMHALTER - GRAU (RAL 7001) SUPPORT RAMPE DE LAVAGE GRIS (RAL7001)	
7	41691	BRACCIO RISCIACQUO ROTATING RINSE ARM NACHSPUELUNGSARM - TOURNIQUET DE RINCAGE	
8	926132	TAPPO PL.X BRACCIO DI RISC.(DWT312) PLASTIC RINSE ARM CAP ZAPFEN EMBOUT EN PLASTIQUE POUR RAMPE DE RINC.	
9	41694	BRACCIO RISCIACQUO RINSE ARM NACHSPUELARM BRAS DE RINÇAGE	
10	80371	CORPO LANCIA GIR RISC ARM BODY KOERPER DES DREHWASCH-UND-NACHSPUELARMES CORPS BRAS	
11	80380	PERNO LANCIA GIREVOLE REVOLVING ARM SPINDLE DREHARMSPINDEL PIVOT DE TOURNIQUET	
12	41693	BRACCIO RISCIACQUO RINSE ARM NACHSPUELARM BRAS DE RINÇAGE	
13	456060	OR 2025 O-RING 2025 O-RING 2025 JOINT THORIQUE 2025	
14	80373	SPRUZZATORE RISCIACQUO RINSE SPRAYER NACHSPUELUNGS-SPRITZER VAPORISATEUR RINCAGE	
15	80365	GHIERA PERNO IN ACCIAIO INOSSIDABILE PER STAINLESS STEEL RING NUT FOR RINSE MANIF EDELSTAHL NUTMUTTER DES NACHSPUEL- EMBOUT FILET▪ EN ACIER INOX POUR PIVOT D	
16	80374	PONTICELLO RISC. + CORPO LANCIA 80371 BRACKET + ARM BODY 80371 BRUCHLEIN + KOERPER DES DREHWASCH PONTET + CORPS BRAS 80371	
17	929195	LANCIA DI LAV.TRIANGOLARE COMPL.U61 COMPLETE TRIANGULAR WASH LANCE U61 DREIECKIGER WASCHARM KOMPL. U61 LANCE DE LAVAGE TRIANGULAIRE COMPLETE	

18	41064CP	CONTROFLANGIA SUPPORTO LANCIA DI LAVAGGI SUPPORT COUNTER-FLANG OF WASH ARM OF POT GEGENFLANSCH DES HALTERS FUER WASCHARM D CONTRE-BRIDE SUPPORT RAMPE DE LAVAGE POU	
19	41064	CONTROFLANGIA SUPPORTO LANCIA DI LAVAGGI SUPPORT COUNTER-FLANGE OF WASH ARM OF PO GEGENFLANSCH DES HALTERS FUER WASCHARM D CONTRE-BRIDE SUPPORT RAMPE DE LAVAGE POU	
20	926252	O-RING 4275/3.53 (69,44X3,53NBR) O-RING 4275/3.35 (69,44X3,53 NBR) DICHTRING 4275/3.53 (69,44X3,53 NBR) BAGUE D'ETANCHEITE' 4275/3.53 (69,44X3,5	
21	42053	PERNO LANCIA DI LAVAGGIO INFERIORE PER PIN FOR LOWER WASH ARM FOR POT AND PAN W ZAPFEN FUER WASCHARM - UNTEN FUER KOCHTO PIVOT POUR RAMPE DE LAVAGE INFERIEURE PO	
22	41185	PARZIALIZZATORE PER LAVAPENTOLE REDUCER FOR POT AND PAN WASHER VERMINDERER FUER KOCHTOEPFESPUELER REDUCTEUR POUR LAVE-CASSEROLES	
23	4206301	RACCORDO LANCIA DI LAVAGGIO INFERIORE PE WASH-ARM CONNECTION - LOWER - FOR POT AN ANSCHLUSSTUECK FUER WASCHARM - UNTEN - K RACCORD RAMPE DE LAVAGE INFERIEURE POUR	

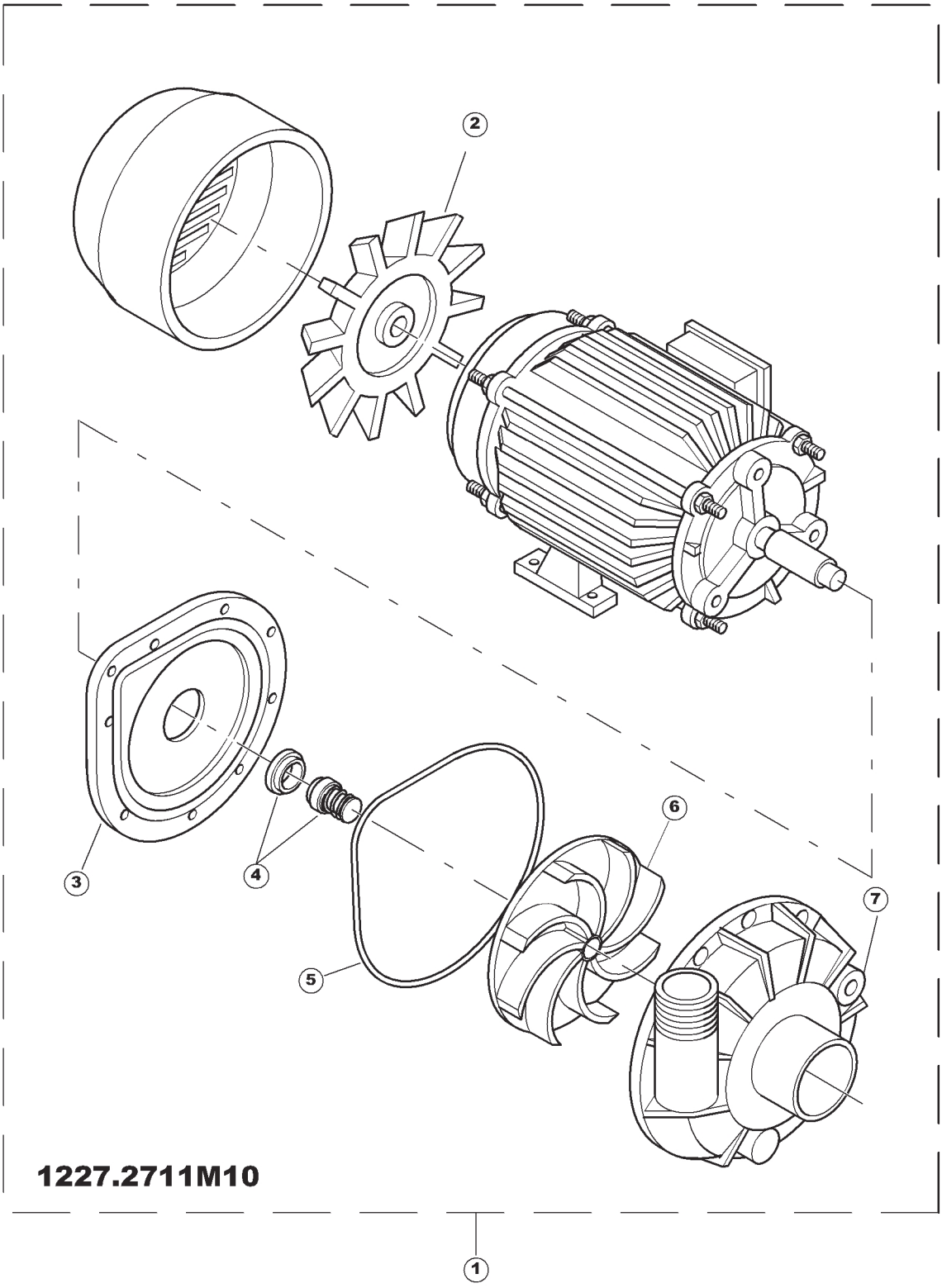
2
3
4
5
6
7
1
1227.2711M10

1	41990	ELETTROPOMPA 2000W ELECTROPUMP 2 KW 230/400-50HZ CL F MOTORPUMPE 2 KW 230/400-50HZ CL F MOTOPOMPE 2 KW 230/400-50HZ CL F	
2	335003	VENTOLA 1295/2277 FAN IMPELLER KUEHLUNGSFLUEGEL TURBINE	
3	315002	FLANGIA+CAPPELLO 1225 FLANGE + CAP 1225 PUMPENGEHAEUSEFLANSCH 1225 FLASQUE COMPL. 1225	
4	141002	TENUTA MECCANICA PER POMPA DI LAVAGGIO P WASH PUMP SHAFT SEAL FOR GLASSWASHER (S6 MECHANISCHE DICHTUNG FUER WASCHPUMPE DER ETANCHEITE' DE LA POMPE DE LAVAGE POUR	
5	456023	OR FIR 1225-41-95 O-RING O-RING JOINT TORIQUE	
6	41991	GIRANTE PER ELETTROPOMPA IMPELLER	
7	116002	CORPO POMPA S850-70 1225 PUMP HOUSING S 850-70 PUMPENGEHAEUSE S850-70 CORPE DE POMPE S850 S870	

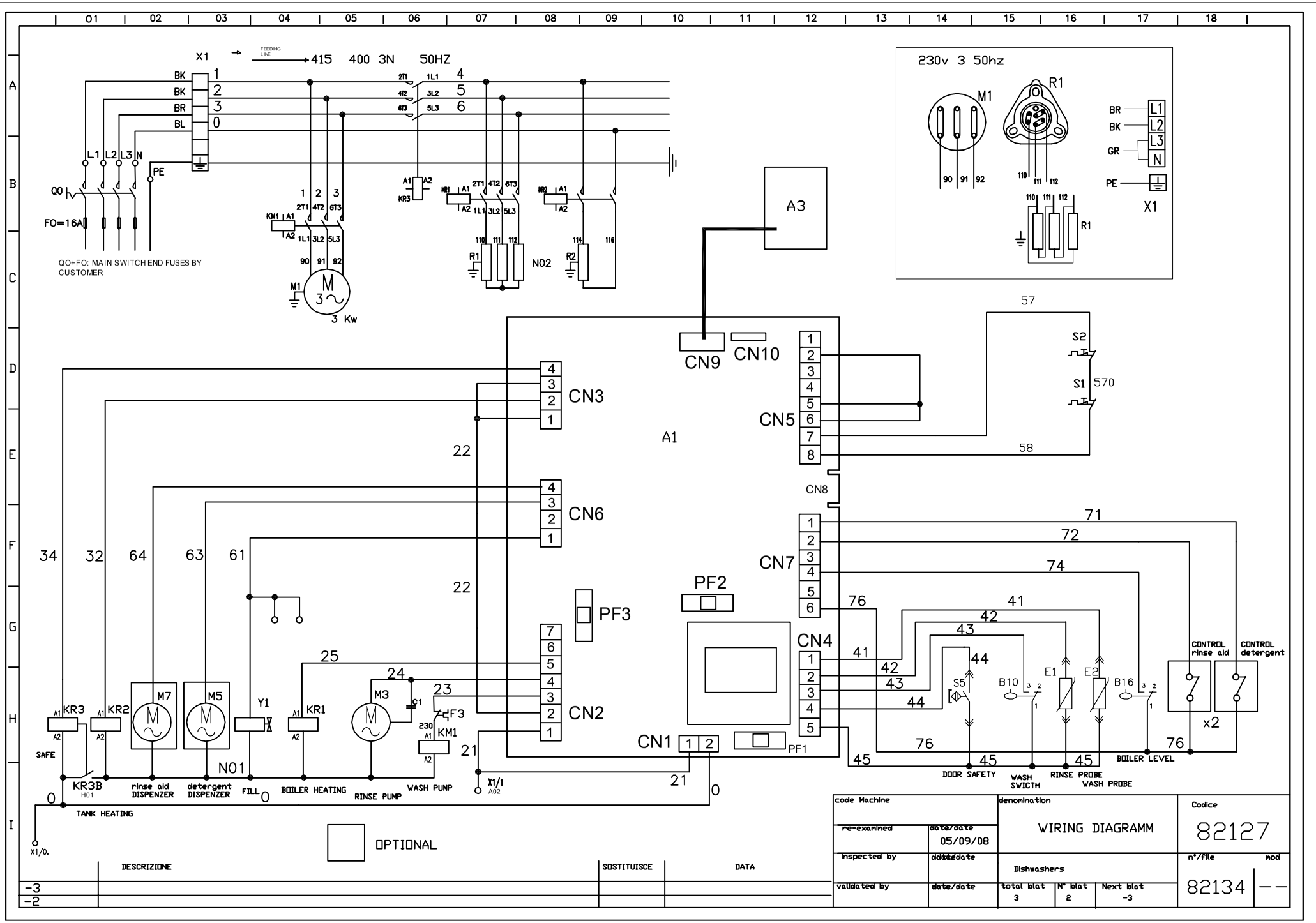

X1
FEEDING LINE
415 400 3N 50HZ
BK
BK
BR
BL
L1 L2 L3 N
PE
Q0
FO=16A
QO+FO: MAIN SWITCH END FUSES BY CUSTOMER
M1
3 Kw
KM1
KR1
KR2
KR3
R1
R2
NO2
A3
230v 3 50hz
M1
R1
BR
BK
GR
PE
X1
CN9
CN10
CN3
CN5
CN6
CN7
CN8
CN4
CN2
CN1
A1
PF1
PF2
PF3
S1
S2
570
57
58
34
32
64
63
61
22
25
24
23
21
0
71
72
74
76
41
42
43
44
45
M7
M5
M3
Y1
KR1
KR2
KR3
KR3B
H01
SAFE
N01
C1
F3
KM1
230
X1/1
A02
X1/0.
TANK HEATING
rinse aid DISPENZER
detergent DISPENZER
FILL
BOILER HEATING
RINSE PUMP
WASH PUMP
S5
B10
E1
E2
B16
DOOR SAFETY
WASH SWICTH
RINSE PROBE
WASH PROBE
BOILER LEVEL
CONTROL rinse aid
CONTROL detergent
x2
OPTIONAL
DESCRIZIONE
SOSTITUISCE
DATA
-3
-2
code Machine
re-examined
date/date
05/09/08
inspected by
validated by
denomination
WIRING DIAGRAMM
Dishwashers
total blat
3
N° blat
2
Next blat
-3
Codice
82127
n°/file
82134
mod
--

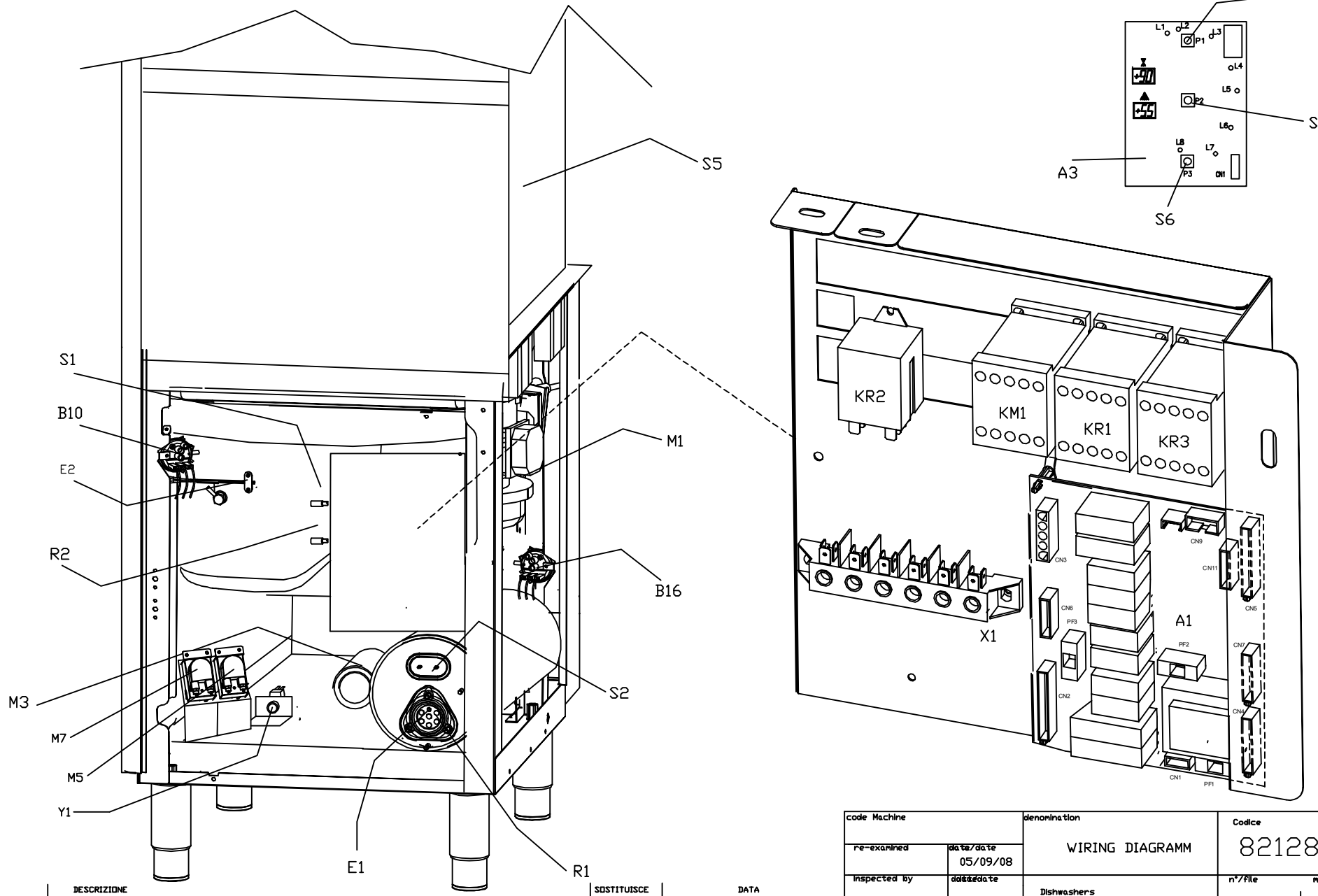

code Machine		denomination		Codice
re-examined	data/date 05/09/08	WIRING DIAGRAMM		82128
inspected by	data/date	Dishwashers		n°/file 82134L — Mod
validated by	data/date	total blat 3	N° blat 2	Next blat -3

DESCRIZIONE	SOSTITUISCE	DATA

S6	PULSANTE DI LINEA MAIN SWITCH	INTERRUPTEUR DE LIGNE NETZSCHALTER
S5	MICROINTERRUTTORE MAGNETICO MAGNETIC SAFETY MICROSWITCH	MICROINTERRUPTEUR MAGNETIQUE MAGNETISCHER SICHERHITSSCHALTER
S3	INTERRUTTORE DI CICLO CYCLE SWITCH	INTERRUPTEUR DE DEMARRAGE WASCHVORGANGSSCHALTER
S4	SELETTORE CICLO CYCLE COMMUTATOR	SELECTEUR CYCLE WAEHLSCHALTER FUER WASCHVORGANGSDAUDER
S1	TERMOSTATO SICUREZZA BOILER SAFETY BOOSTER HEATER THERMOSTAT	THERMOSTAT DE SICURITE DU BOYLER SICHERHEITZUNG
S2	TERMOSTATO SICUREZZA VASCA SAFETY TANK HEATER THERMOSTAT	THERMOSTAT DE SICURITE CUVE SICHERHEITS– TANKTHERMOSTAT
R2	RESISTENZA VASCA LAVAGGIO WASH TANK HEATING ELEMENT	RESISTANCE CUVE DE LAVAGE WASCHTANKHEIZUNG
R1	RESISTENZA BOILER BOOSTER HEATER HEATING ELEMENT	RESISTANCE BOYLER BOILERHEIZUNG
M7	ELETTRODOSATORE TENSIOATTIVO EL. RINSEAID INJECTOR	DOSEUR EL. PRODUIT RINCAGE NACHSPUELMITTELDOSIERGERAET
M6	ELETTROPOMPA DI SCARICO DRAIN PUMP	MOTEUR POMPE VIDANGE MOTOR LAUGENPUMPE
M3	ELETTROPOMPA AUMENTO PRESSIONE RINSE BOOSTER PUMP	ELECTROPOMPE AUGMENT PRESSION DRUCKSTEIGERUNGSPUMPE
M5	ELETTRODOSATORE DETERSIVO EL. DETERGENT INJECTOR	DOSEUR EL. DETERGENT SPUEL MITTELDOSIERGERAET
M1	ELETTROPOMPA LAVAGGIO WASH ELECTRIC PUMP	ELECTROPOMPE LAVAGE ELEKTRISCHE UMAELZPUMPE
KR3	TELERUTTORE SICUREZZA RESISTENZA BOILER SAFETY BOOSTER HEATER CONTACTOR	CONTACTEUR RESISTANCE BOYLER LUFTSCHUETZ F. BOILERHEITZUNG
KR2	TELERUTTORE RESISTENZA VASCA TANK HEATER CONTACTOR	
KR1	TELERUTTORE RESISTENZA BOILER BOOSTER HEATER CONTACTOR	CONTACTEUR RESISTANCE BOYLER LUFTSCHUETZ F. BOILERHEITZUNG
KM1	TELERUTTORE ELETTROPOMPA LAVAGGIO WASCH PUMP CONTACTEUR	CONTACTEUR ELECTROPOMPE LAVAGE SCHUETZ F. UMWAELPUMPE
F3	PROTEZIONE TERMICA ELETTROPOMPA EL. WASH PUMP THERMAL PROTECTION	PROT. THERMIQUE MOTEUR EL. POMPE THERMISHER MOTORSCHULTZ
Y1	ELETTROVALVOLA RISCIACQUO RINSE SOLENOID VALVE	ELECTROVANNE DE RINCAGE MAGNETVENT FUER NACHSPUELUNG
E2	SONDA CONTROLLO VASCA PROBE TANK HEATER	THERMOSTAT RESISTANCE CUVE THANKHEIZUNGTHERMOSTAT
E1	SONDA CONTROLLO BOILER BOOSTER HEATER THERMOSTAT	THERMOSTAT RESISTANCE BOYLER BOILERHEIZUNG
C1	CONDESATORE CAPACITOUR	
B16	PRESSOSTATO LIVELLO BOILER BOILER PRESSURE SWITCH	PRESSOSTAT NIVEAU SURCHAUFFER NACHSPULBOILER NIVEAUSCHALTER
B18	CONTROLLO LIVELLO BRILLANTANTE RINSE AID CONTROL LEVEL	CONTROLE NIVEAU PRODUIT DE RINCAGE STUFE GLANZMITTEL
B12	CONTROLLO LIVELLO DETERGENTE DETERGENT LEVEL	CONTROLE NIVEAU DETERGENT SPULMITTELNIVEAUSCHALTER
B10	PRESSOSTATO LIVELLO VASCA TANK PRESSURE SWITCH	PRESSOSTAT NIVEAU AIRGAP TANKDRUCKSCHALTER–NIVEAUREGLER
A1/A3	SCHEDA CONTROLLO ELECTRONIC CONTROL UNIT	FICHE DE CONTROLEELECTRONIQUE ELEKTRONISCHE BEDIENUNGSKARTE
SIMB.	DESCRIZIONE DESCRIPTION	DESCRIPTION BESCHREIBUNG

DESCRIZIONE	SOSTITUISCE	DATA
-3		
-2		

code Machine		denomination		Code
re-examined	date 05/09/08	WIRING DIAGRAMM		82127
inspected by	date	Dishwashers		n°/file 82134 mod --
validated by	date	total blat 3	N° blat 1	Next blat -2

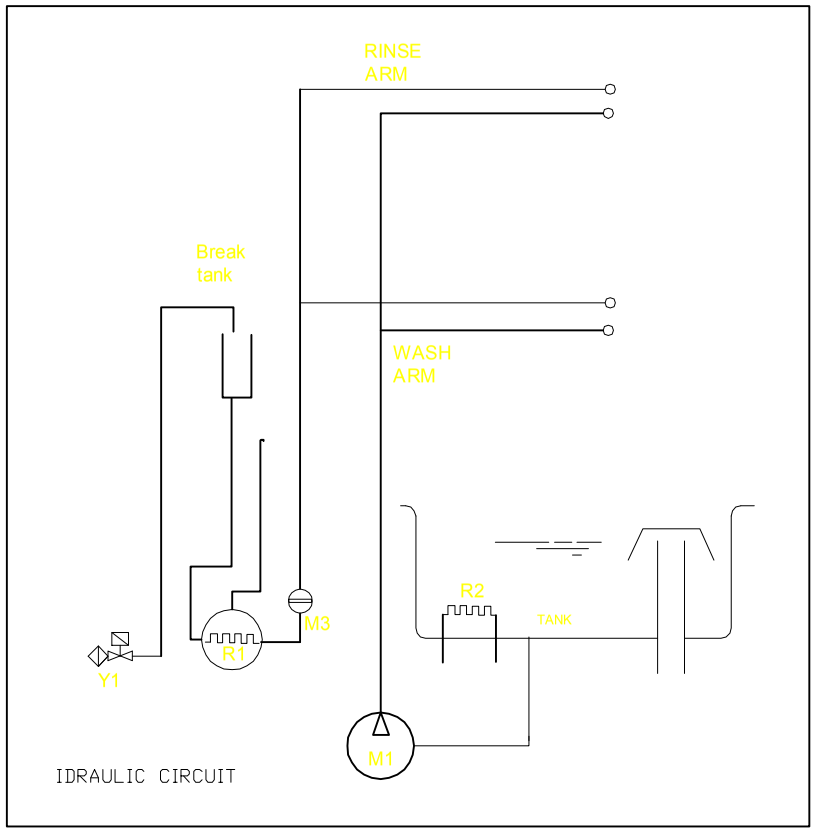

DESCRIZIONE	SOSTITUISCE	DATA

code Machine		denomination		Codice
re-examined	date/date 05/09/08	WIRING DIAGRAMM		
inspected by	date/date	Dishwashers		n°/file 82134I mod --
validated by	date/date	total blat 4	N° blat 4	Next blat --