SAGI - BASI REFRIGERATE
JA2M - 12-05-2005 »

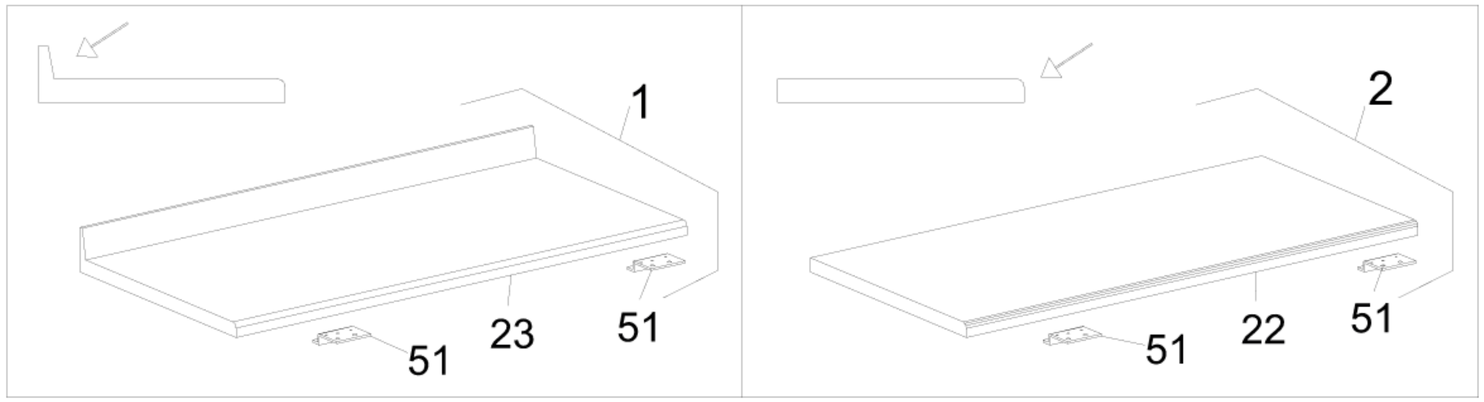

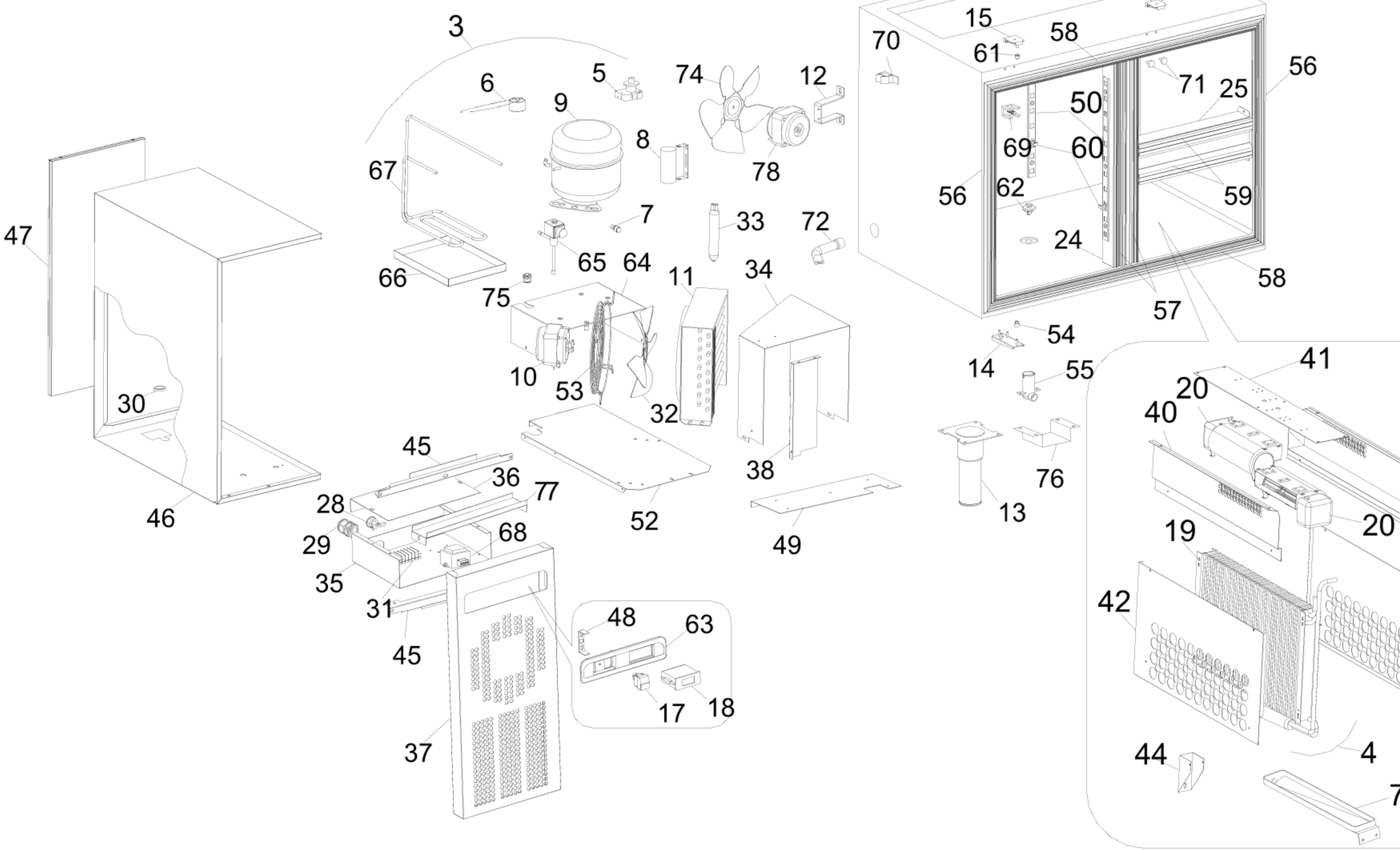

Modello Typ Model Modele Modelo

Porte Ture Doors Portes Portas Gabetas		JA JAA JAM	JA2 JA2A JA2M	JB JBA JBM	JB2 JB2A JB2M	JB4 JB4A JB4M
	SX	1	1	2	2	1
	DX	1	...	1	...	...

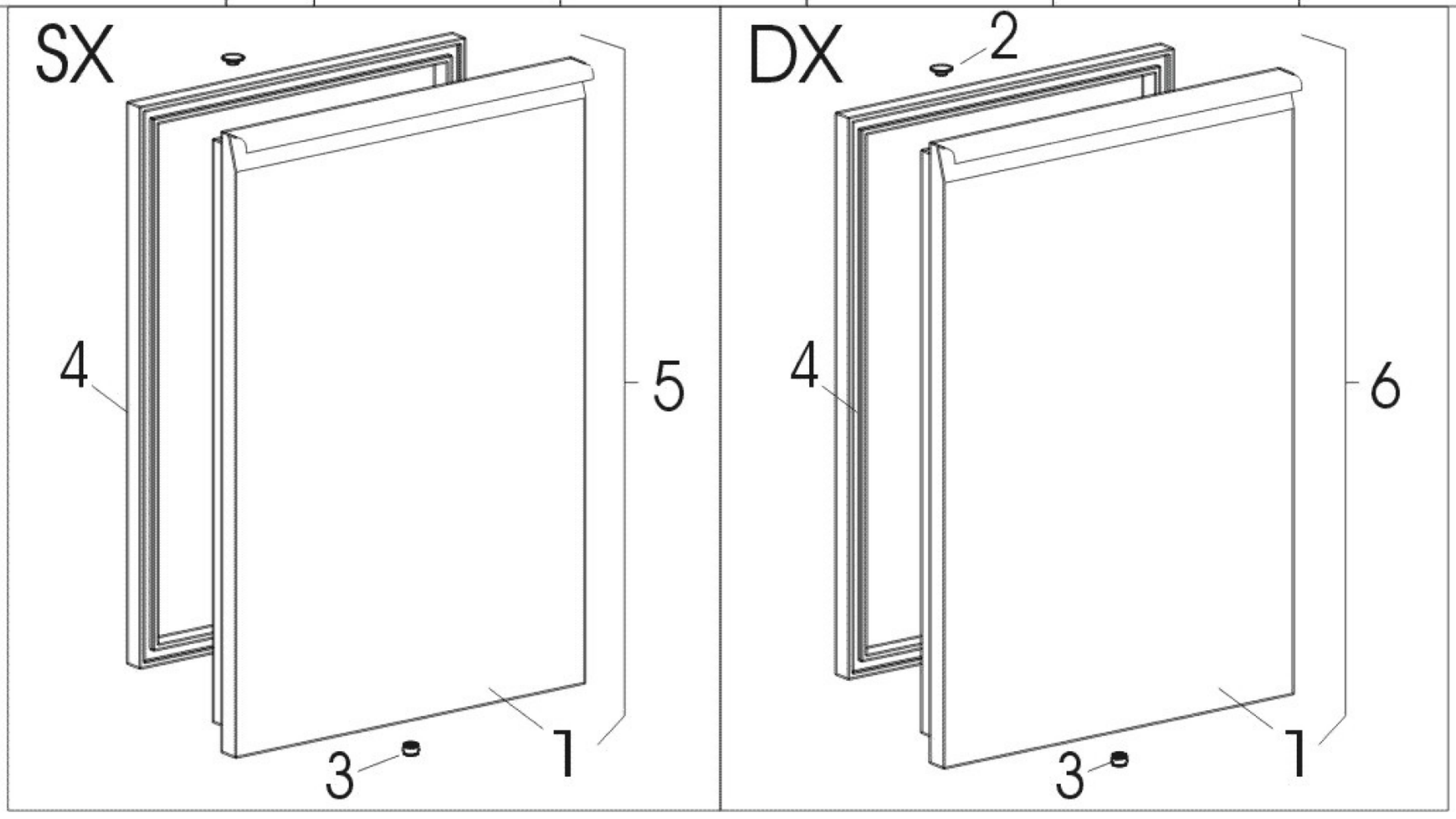

		Modello JA JAA JAM	Typ JA2 JA2A JA2M	Model JB JBA JBM	Modele JB2 JB2A JB2M	Modelo JB4 JB4A JB4M
Num. Cassetti Schublad Drawers Tiroirs Gabetas	1/2	---	2	---	2	4

