SIMAG

ELECTRONIC MODULAR CUBER

SV 145

SPARE PARTS LIST
CATALOGO RICAMBI
CATALOGUE PIÈCES DÉTACHÉES
ERSATZTEILENKATALOG

090090.17 - REV. 05/2010

Spare Parts Catalogue
SV 145

1 - UNIT PANELS - AIR COOLED VERSION
2 - UNIT PANELS - WATER COOLED VERSION
3 - WATER SYSTEM
4 - REFRIGERANT SYSTEM AIR COOLED
5 - REFRIGERANT SYSTEM WATER COOLED
6 - P.C. BOARD AND SENSORS ASSY

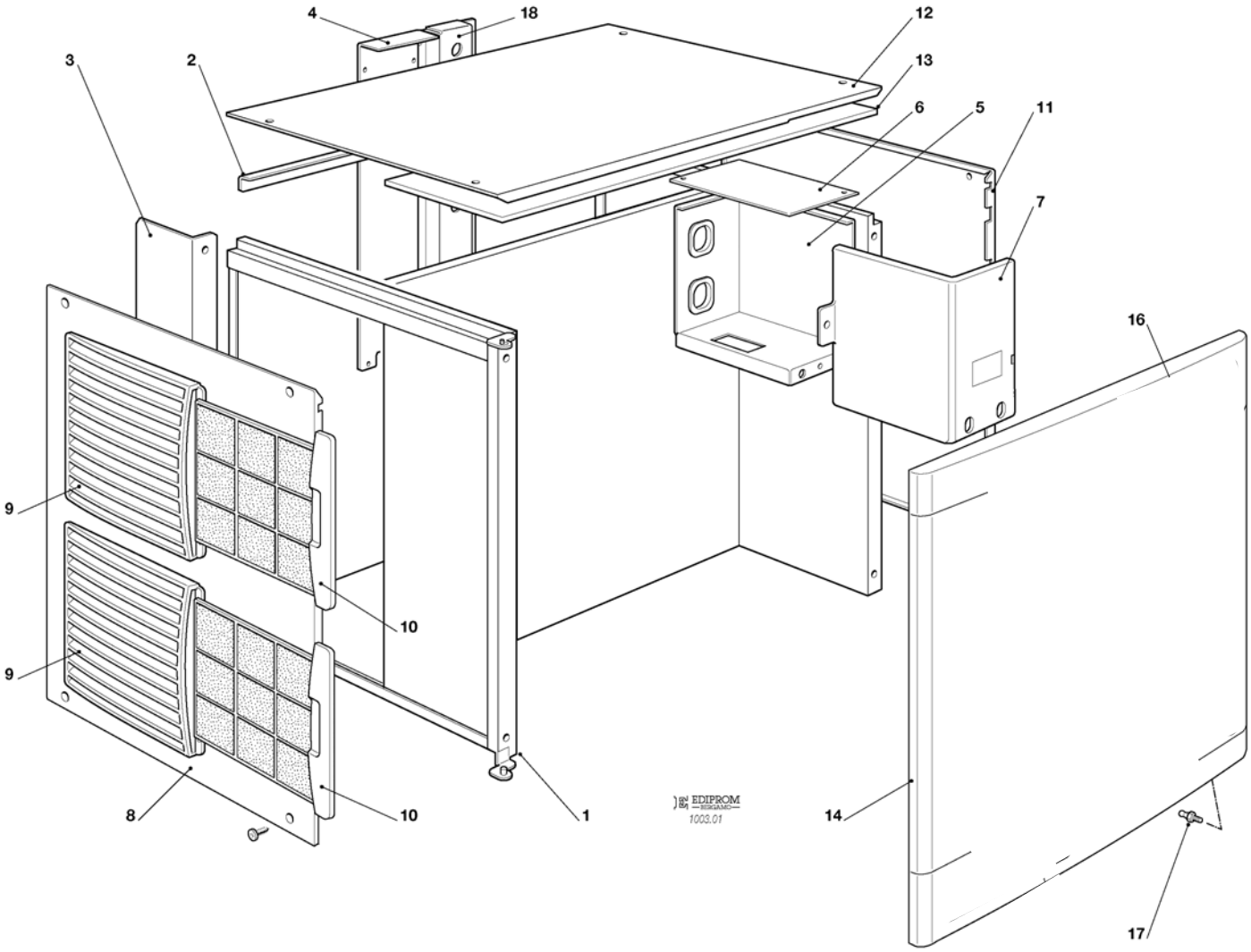

1 - UNIT PANELS - AIR COOLED VERSION

1 - UNIT PANELS - AIR COOLED

POSITION	CODE	DESCRIPTION
0001	CM 81454426	UNIT FRAME
0002	CM 25753313	METAL BRACKET
0003	CM 25260478	AIR BAFFLE
0005	CM 81454446	CONTROL BOX
0006	CM 25160729	CONTROL BOX TOP
0007	CM 25160731	CONTROL BOX COVER
0008	CM 81455130	LEFT SIDE PANEL ASSY
0009	02004224 01	PLASTIC LOUVER PANEL
0010	02004212 01	PLASTIC FILTER
0011	CM 25330869	RIGHT SIDE PANEL
0012	CM 81454463	TOP PANEL ASSY
0013	CM 25410110	INSULATION
0014	CM 81453784	FRONT PANEL ASSY
0016	CM 19262786	LABEL, MONITORING PANEL
0017	CM 19520104	METAL PIN
0018	CM 25725592	METAL BRACKET

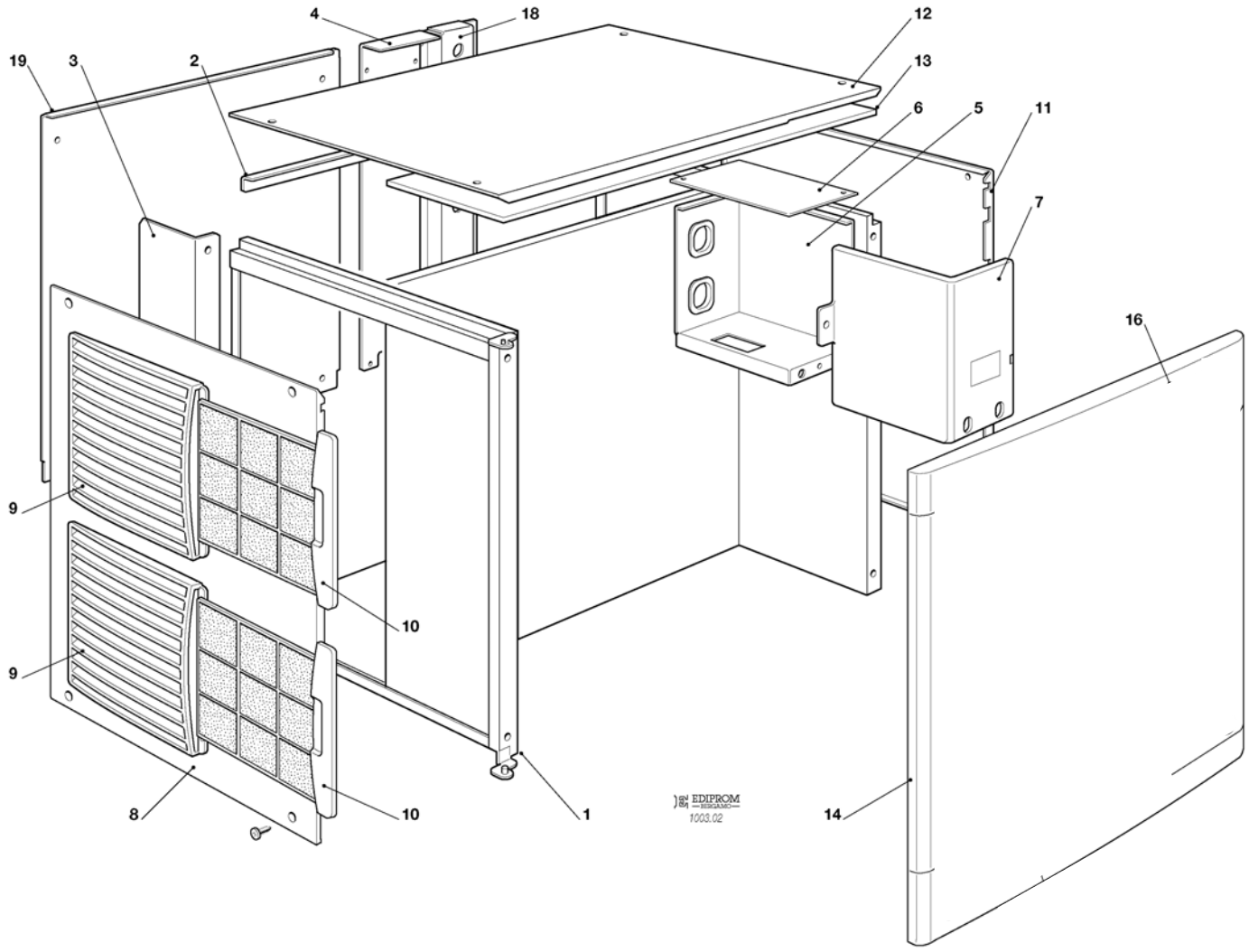

1 - UNIT PANELS - WATER COOLED VERSION

2 - UNIT PANELS - WATER COOLED

POSITION	CODE	DESCRIPTION
0001	CM 81454426	UNIT FRAME
0002	CM 25753313	METAL BRACKET
0003	CM 25260478	AIR BAFFLE
0005	CM 25160730	CONTROL BOX
0006	CM 25160729	CONTROL BOX TOP
0007	CM 25160731	CONTROL BOX COVER
0008	CM 81455130	LEFT SIDE PANEL ASSY
0009	02004224 01	PLASTIC LOUVER PANEL
0010	02004212 01	PLASTIC FILTER
0011	CM 25330869	RIGHT SIDE PANEL
0012	CM 81454463	TOP PANEL ASSY
0013	CM 25410110	INSULATION
0014	CM 81453784	FRONT PANEL ASSY
0016	CM 19262786	LABEL, MONITORING PANEL
0018	CM 25725592	METAL BRACKET
0019	CM 25550806	BACK PANEL

3 - WATER SYSTEM

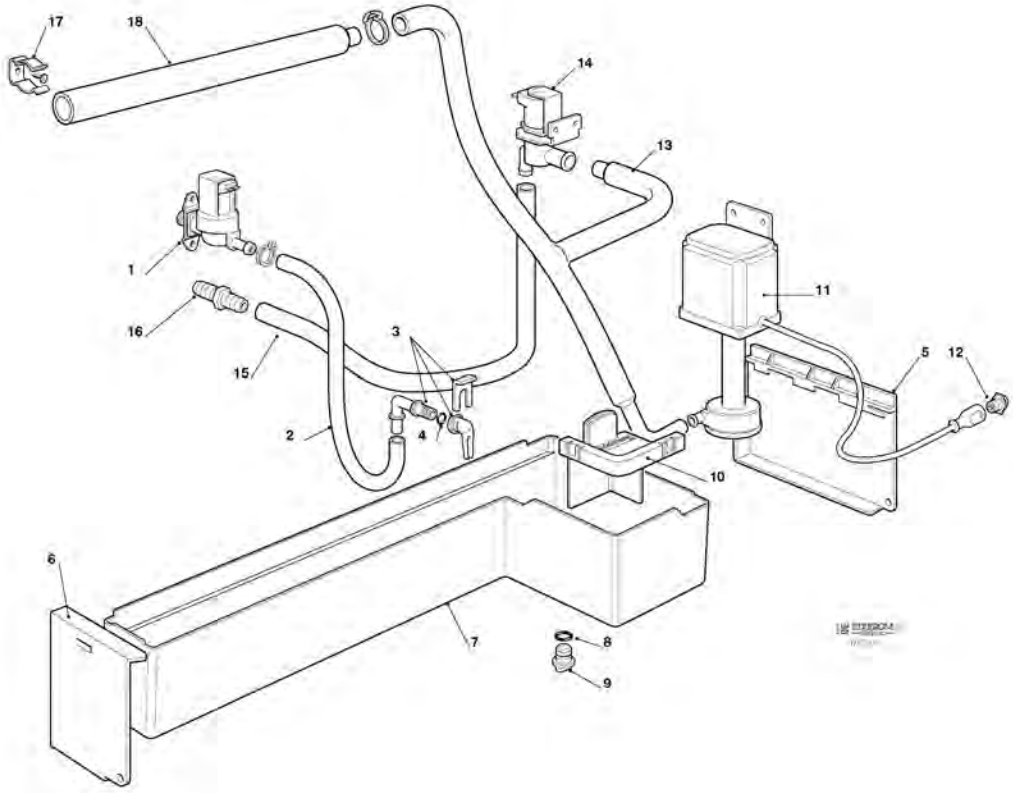

3 - WATER SYSTEM

POSITION	CODE	DESCRIPTION
0001	650105 54	INLET VALVE - 230/50 - 60
0002	CM 25792026	HOSE
0003	793172 00R	WATER INLET ELBOW ASSY
0004	640041 31	O RING
0005	CM 25725606	RIGHT PLASTIC BRACKET
0006	CM 25725607	LEFT PLASTIC BRACKET
0007	CM 25820132	WATER SUMP
0008	CM 41020448	GASKET
0009	CM 25730503	DRAIN PLUG
0010	CM 25725591	PLASTIC COVER
0011	CM 81454131	WATER PUMP ASSY
0012	CM 81453915	POWER SOCKET
0013	CM 25790075	HOSE
0014	CM 19865598	PURGE VALVE
0015	CM 25790072	PLASTIC HOSE
0016	CM 25690807	DRAIN FITTING, WATER
0017	CM 25474608	METAL CLIP
0018	CM 81453460	SPRAY SYSTEM

4 - REFRIGERANT SYSTEM AIR COOLED

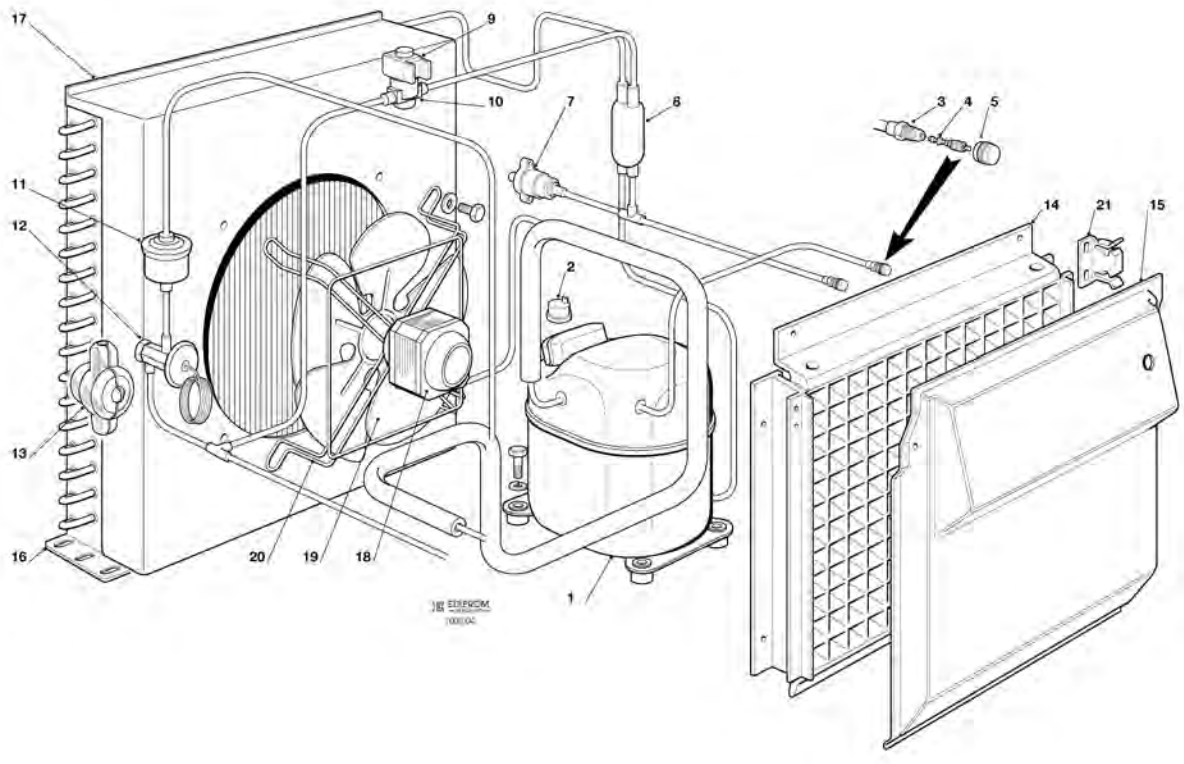

4 - REFRIGERANT SYSTEM AIR COOLED

POSITION	CODE	DESCRIPTION
0001	670101 03	COMPRESSOR 230/50/1
0002	620058 51	PROTECTOR 230/50
0003	650109 00	VALVE BODY
0004	670012 00	VALVE CORE
0005	650106 00	CAP
0007	CM 81453749	HI PRESSURE CONTROL
0008	CM 19301268	MECHANICAL FILTER
0009	060689 00	HOT GAS VALVE COIL - 230/50-60
0010	CM 19863034	HOT GAS VALVE ASSY - 230/50-60
0011	CM 19300357	FILTER
0012	CM 19870402	TXV
0013	CM 25410096	TXV INSULATION
0014	CM 81455104	EVAPORATOR DICE
0014	CM 81455105	EVAPORATOR HALFDICE
0015	CM 81453692	PLASTIC CURTAIN
0016	CM 19177106	CONDENSER
0017	CM 25156591	SHROUD
0018	CM 18562524	FAN MOTOR - 230/50-60
0019	CM 18740042	FAN BLADE
0020	CM 25726513	FAN BRACKET
0021	CM 25726473	DEFLECTOR BRACKET

5 - REFRIGERANT SYSTEM WATER COOLED

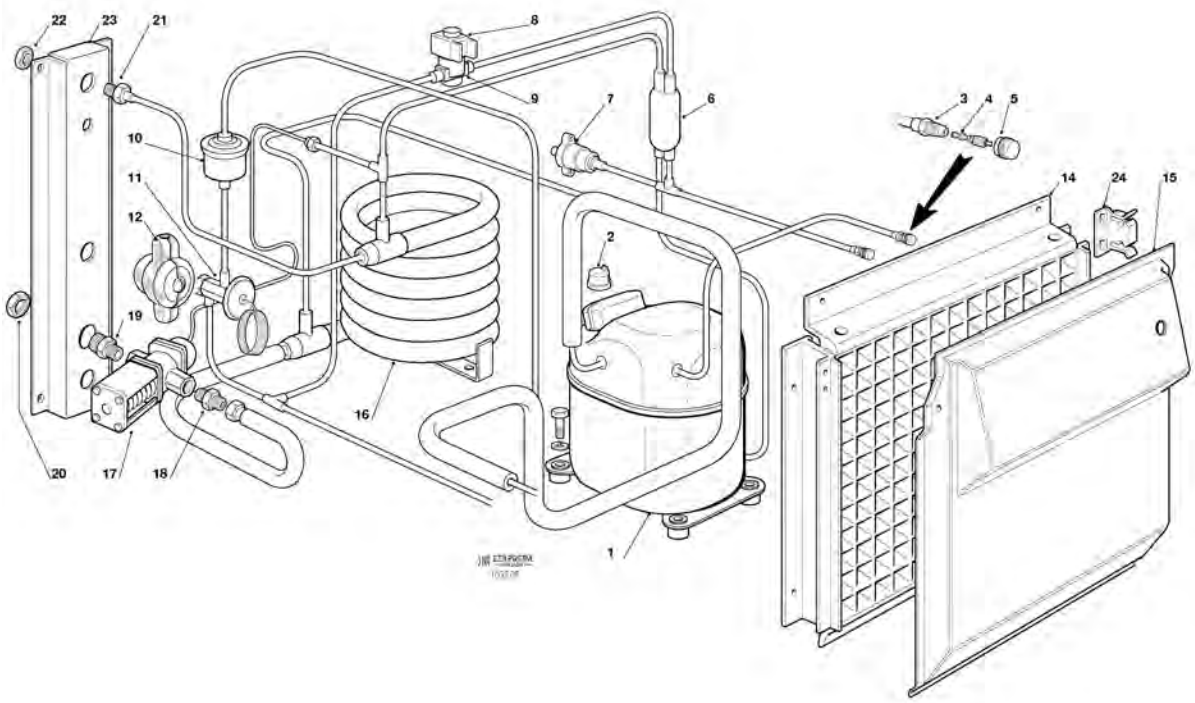

5 - REFRIGERANT SYSTEM WATER COOLED

POSITION	CODE	DESCRIPTION
0001	670101 03	COMPRESSOR 230/50/1
0002	620058 51	PROTECTOR 230/50
0003	650109 00	VALVE BODY
0004	670012 00	VALVE CORE
0005	650106 00	CAP
0006	CM 19301268	MECHANICAL FILTER
0007	CM 81453749	HI PRESSURE CONTROL
0008	060689 00	HOT GAS VALVE COIL - 230/50-60
0009	CM 19863034	HOT GAS VALVE ASSY - 230/50-60
0010	CM 19300357	FILTER
0011	CM 19870402	TXV
0012	CM 25410096	TXV INSULATION
0014	CM 81455104	EVAPORATOR DICE
0014	CM 81455105	EVAPORATOR HALFDICE
0015	CM 81453692	PLASTIC CURTAIN
0015	CM 81455120	PLASTIC CURTAIN
0017	620111 00	WATER REGUL. VALVE
0018	CM 25631045	FITTING
0019	CM 25631047	FITTING
0020	CM 25250105	NUT
0021	CM 25631039	WATER FITTING-IN
0023	CM 25725537	METAL BRACKET RT
0024	CM 25726473	DEFLECTOR BRACKET

6 - P.C. BOARD AND SENSORS ASSY

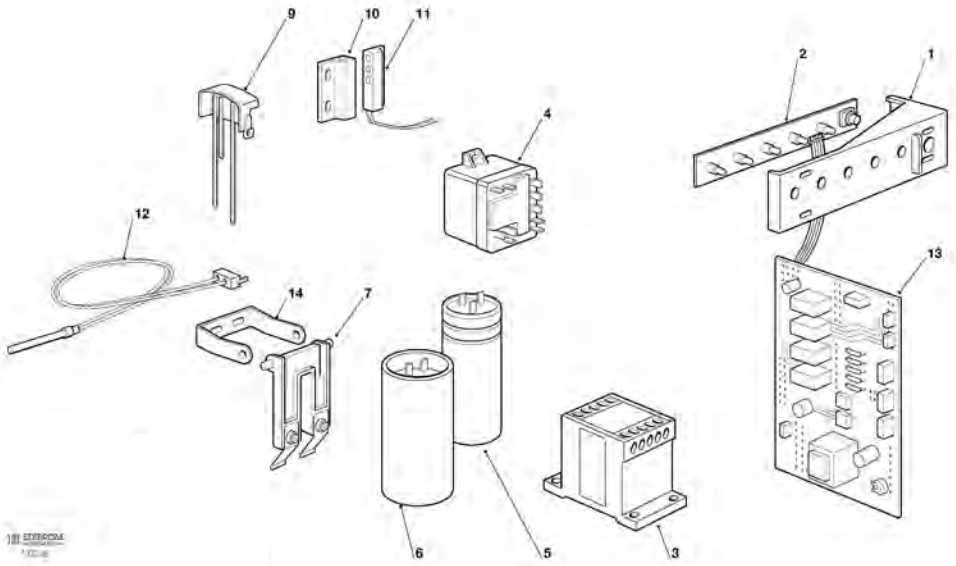

6 - P.C. BOARD AND SENSORS ASSY

POSITION	CODE	DESCRIPTION
0001	CM 81453668	LED HOLDER
0002	CM 33580151	MONITOR PANEL
0003	CM 33730712	CONTACTOR
0004	620168 22	RELAY - 230/50
0005	620167 21	CAPACITOR - 15 MFD/400V
0006	620167 01	START CAPACITOR 64-77 MFD/330V
0007	CM 81453434	SENSOR, ICE THICKNESS
0009	0A039030 21	WATER LEVEL SENSOR
0009	CM 81455102	WATER LEVEL SENSOR HARNESS
0010	CM 19355007	MAGNET
0011	CM 33210019	MAGNET SWITCH
0012	CM 33580101	CONDENSER SENSOR
0013	CM 33580250	CONTROLLER
0014	CM 25725450	SENSOR SYST. BRKT



Via Pascoli, 22 - 20010 Pogliano Milanese (Milano) Italy
Tel. +39 02 93900215 (Commerciale - Sales Dept.)
Tel. +39 02 93960357 (Assistenza - Service Dept.)
Fax +39 02 93900226 (Commerciale - Sales Dept.)
Fax +39 02 93960366 (Assistenza - Service Dept.)
E-mail: sales@simag.it • service@simag.it
www.simag.it