DESPIECE TECNICO

Fry-Tops a Gas
Fry-Tops à Gaz
Gas Fry-Tops
Fry-Tops a Gas
Fry-Tops a Gás
Gas-Griddle-Platten

GAMA SNACK

Modelos:

PL-105 L
PL-105 C
PL-110 L
PL-110 R
PL-110 L+R
PL-110 C

Junio 2010 June

Fagor Industrial

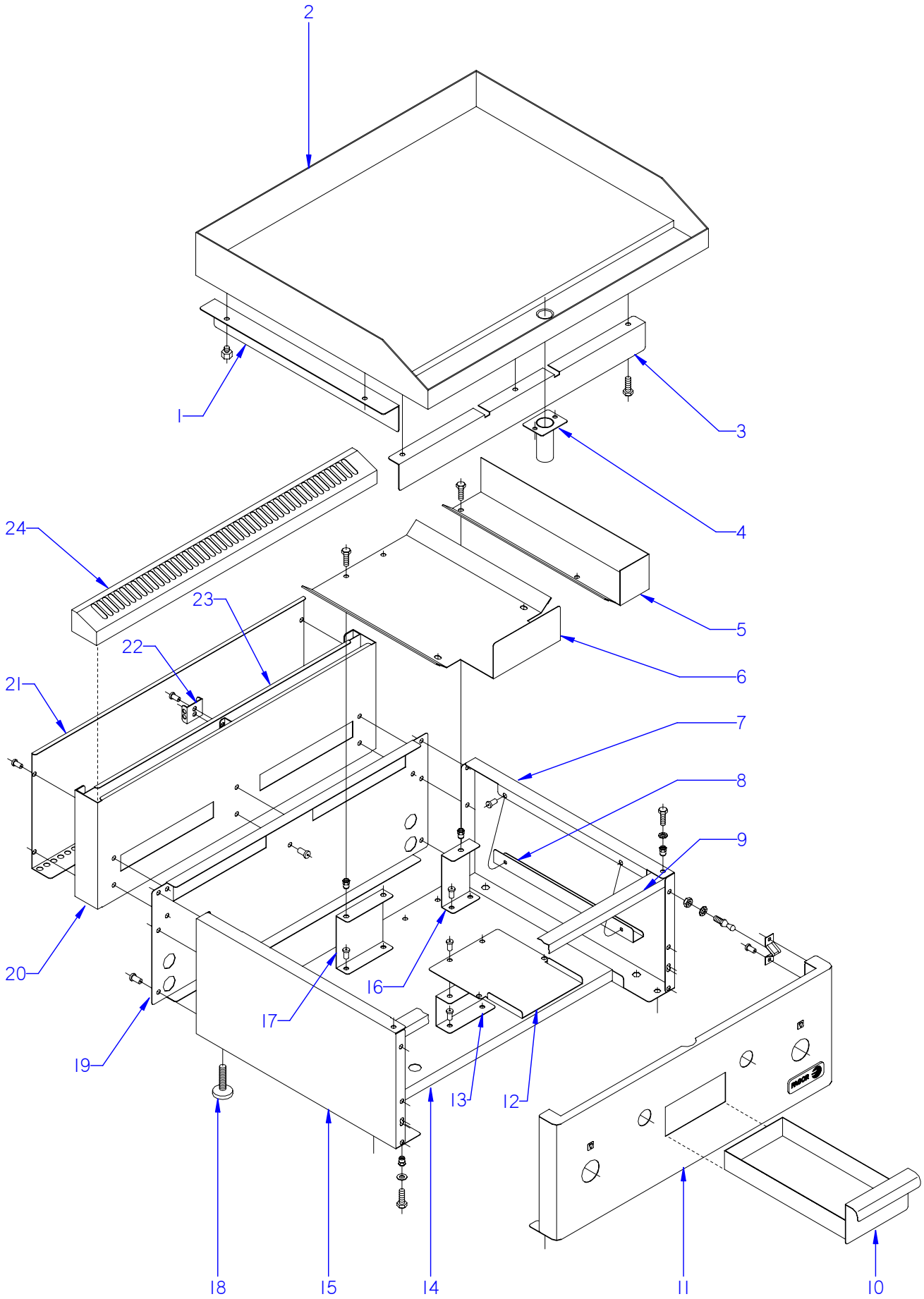

ITEM MARCADO EN COLOR = REPUESTO RECOMENDADO
COLOURED ITEM = RECOMMENDED SPARE PART

N plano	Firma	Fecha	Aparato	Lamina	
C-2673		2010-06	MUEBLE / FITTING FRY-TOP PL-105 / PL-110	1	Fagor Industrial S.Coop. Onate

MOD.	FRY-TOP	ZONA / ZONE	MUEBLE / FITTING	PLANO DIAGRAM	C-2673

ITEM	CODIGO CODE	DENOMINACION	NAME	PL-105 L	PL-105 C	PL-110 L	PL-110 R	PL-110 L+R	PL-110 C		NOTAS
1	R535416000	LISTON LATERAL	SIDE LISTON	2	2	2	2	2	2		
	R615412000	APOYO LATERAL	SIDE SUPPORT	4	4	4	4	4	4		
2	R525400000	PLANCHA G105 L	PLATE G105 L	1	-	-	-	-	-		
2	R525405000	PLANCHA G105 L CD	PLATE G105 L CD	-	1	-	-	-	-		
2	R535400000	PLANCHA G110 L	PLATE G110 L	-	-	1	-	-	-		
2	R535414000	PLANCHA G110 R	PLATE G110 R	-	-	-	1	-	-		
2	R535407000	PLANCHA G110 L+R	PLATE G110 L+R	-	-	-	-	1	-		
2	R535410000	PLANCHA G110 CD	PLATE G110 CD	-	-	-	-	-	1		
3	R525408000	FALDON FRONTAL	FRONT APRON	1	-	-	-	-	-		
3	R525407000	FALDON FRONTAL	FRONT APRON	-	1	-	-	-	-		
3	R535417000	FALDON FRONTAL	FRONT APRON	-	-	1	1	1	-		
3	R535415000	FALDON FRONTAL	FRONT APRON	-	-	-	-	-	1		
	Q302022000	ARANDELA 16x6x1,2 A304	WASHER 16x6x1.2 A304	6	6	10	10	10	10		
	Q012041000	TORNILLO EXAGONAL M6X10	HEXAGONAL BOLT M6X10	3	3	5	5	5	5		
4	R525024000	TUBO RECOGEGRASAS	GREASE COLLECTION PIPE	1	1	1	1	1	1		
5	R532610000	DEFLECTOR LATERAL DERECHO	RIGHT SIDE DEFLECTOR	1	1	1	1	1	1		
S/Nº	R532609000	DEFLECTOR LATERAL IZQUIERDO	LEFT SIDE DEFLECTOR	1	1	1	1	1	1		
6	R532611000	DEFLECTOR CENTRAL IZQUIERDO	CENTRAL SIDE DEFLECTOR	1	1	2	2	2	2		
	Q012031000	TORNILLO EXAGONAL M5x10 A304	HEXAGONAL BOLT M5x10 A304	8	8	8	8	8	8		
7	R532801000	PANEL LATERAL DERECHO	RIGHT SIDE PANEL	1	1	1	1	1	1		
	Q221342000	REMACHE EXAGONAL M5	HEXAGONAL RIVET M5	6	6	6	6	6	6		
	Q221345000	REMACHE EXAGONAL M10	HEXAGONAL RIVET M10	2	2	2	2	2	2		
8	R532614000	TIRANTE LATERAL	SIDE STRAP	2	2	2	2	2	2		
	Q419005000	REMACHE 4X8 ALMG3 / ALUMINIO	RIVET 4X8 ALMG3 / ALUMINIUM	4	4	4	4	4	4		
9	R522601000	LARGUERO SUPERIOR	TOP STRINGER	1	1	-	-	-	-		
9	R532606000	LARGUERO SUPERIOR	TOP STRINGER	-	-	1	1	1	1		
	Q221342000	REMACHE EXAGONAL M5	HEXAGONAL RIVET M5	2	2	2	2	2	2		
	Q012031000	TORNILLO EXAGONAL M5X10 A.304	HEXAGONAL BOLT M5X10 A.304	2	2	2	2	2	2		
10	R532604000	CAJA RECOGEGRASAS	GREASE COLLECTION TRAY	1	1	1	1	1	1		

MOD.	FRY-TOP	ZONA / ZONE	MUEBLE / FITTING	PLANO DIAGRAM	C-2673

ITEM	CODIGO CODE	DENOMINACION	NAME	PL-105 L	PL-105 C	PL-110 L	PL-110 R	PL-110 L+R	PL-110 C		NOTAS
11	R522804000	PANEL PORTAMANDOS 105	CONTROL HOLDER 105	1	_	-	-	-	-		
11	R522805000	PANEL PORTAMANDOS 105 CD	CONTROL HOLDER 105 CD	_	1	-	-	-	-		
11	R532806000	PANEL PORTAMANDOS 110	CONTROL HOLDER 110	-	-	1	1	1	_		
11	R532807000	PANEL PORTAMANDOS 110 CD	CONTROL HOLDER 110 CD	-	-	_	_	_	1		
	U022836000	ESCUDO FAGOR	FAGOR EMBLEM	2	2	2	2	2	2		
	Q221023000	CLIP SUJECIÓN RÁPIDA Ø5	RAPID CONNECT CLIP Ø5	6	6	6	6	6	6		
	Q012031000	TORNILLO EXAGONAL M5x10 A304	HEXAGONAL BOLT M5x10 A304	2	2	2	2	2	2		
	Q302022000	ARANDELA 16x6x1,2 A304	WASHER 16x6x1.2 A304	2	2	2	2	2	2		
	X012612000	PITON CIERRE	PITON CLOSE	2	2	2	2	2	2		
	X010503000	CIERRE MUELLE	LOCK SPRING	2	2	2	2	2	2		
12	R532603000	GUIA RECOGEGRASAS	GREASE COLLECTION GUIDE	1	1	1	1	1	1		
	Q419005000	REMACHE 4X8 ALMG3 / ALUMINIO	RIVET 4X8 ALMG3 / ALUMINIUM	4	4	4	4	4	4		
13	R532602000	APOYO RECOGEGRASAS	GREASE COLLECTION SUPPO.	1	1	1	1	1	1		
14	R522600000	BASE PL-105	BASE PL-105	1	1	-	-	-	-		
14	R532601000	BASE PL-110	BASE PL-110	-	-	1	1	1	1		
	Q012031000	TORNILLO EXAGONAL M5x10 A304	HEXAGONAL BOLT M5x10 A304	4	4	4	4	4	4		
15	R532800000	PANEL LATERAL IZQUIERDO	LEFT SIDE PANEL	1	1	1	1	1	1		
16	R532607000	SOPORTE DEFLECTOR LATERAL	SUPPO. SIDE DEFLECTOR	1	1	1	1	1	1		
	Q419005000	REMACHE 4X8 ALMG3 / ALUMINIO	RIVET 4X8 ALMG3 / ALUMINIUM	4	4	4	4	4	4		
	Q221342000	REMACHE EXAGONAL M5	HEXAGONAL RIVET M5	2	2	2	2	2	2		
17	R532613000	SOPORTE DEFLECTOR CENTRAL	CENTRAL DEFLECTOR SUPPO.	1	1	2	2	2	2		
	Q419005000	REMACHE 4X8 ALMG3 / ALUMINIO	RIVET 4X8 ALMG3 / ALUMINIUM	2	2	2	2	2	2		
	Q221342000	REMACHE EXAGONAL M5	HEXAGONAL RIVET M5	2	2	2	2	2	2		
18	Z200107000	PATA REGULABLE	ADJUSTABLE LEG	4	4	4	4	4	4		
19	R522801000	PANEL POSTERIOR PL-105	REAR PANEL PL-105	1	1	-	-	-	-		
19	R532803000	PANEL POSTERIOR PL-110	REAR PANEL PL-110	-	-	1	1	1	1		
20	R522802000	ANTERIOR DE CHIMENEA PL-105	FLUEPIPE FRONT PL-105	1	1	-	-	-	-		
20	R532804000	ANTERIOR DE CHIMENEA PL-110	FLUEPIPE FRONT PL-110	-	-	1	1	1	1		
21	R522803000	POSTERIOR DE CHIMENEA PL-105	FG REAR FLUE PL-105	1	1	-	-	-	-		
21	R532805000	POSTERIOR DE CHIMENEA PL-110	FG REAR FLUE PL-110	-	-	1	1	1	1		
	Q419005000	REMACHE 4X8 ALMG3 / ALUMINIO	RIVET 4X8 ALMG3 / ALUMINIUM	10	10	10	10	10	10		

MOD.	FRY-TOP	ZONA / ZONE	MUEBLE / FITTING	PLANO DIAGRAM	C-2673

ITEM	CODIGO CODE	DENOMINACION	NAME	PL-105 L	PL-105 C	PL-110 L	PL-110 R	PL-110 L+R	PL-110 C		NOTAS
22	R202604000	ESCUADRA SEPARAD. CHIMENEA	CHIMNEY BRACKET SEPARAT.	2	2	2	2	2	2		
	Q419005000	REMACHE 4X8 ALMG3 / ALUMINIO	RIVET 4X8 ALMG3 / ALUMINIUM	2	2	2	2	2	2		
23	R522602000	SEPARADOR CHIMENEA PL-105	FIREPLACE SEPARAT. PL-105	1	1	-	-	-	-		
23	R532608000	SEPARADOR CHIMENEA PL-110	FIREPLACE SEPARAT. PL-110	-	-	1	1	1	1		
24	R525404000	EMBELLECED. POSTERIOR PL-105	REAR TRIM L-105	1	1	-	-	-	-		
24	R535406000	EMBELLECED. POSTERIOR PL-110	REAR TRIM L-110	-	-	1	1	1	1		

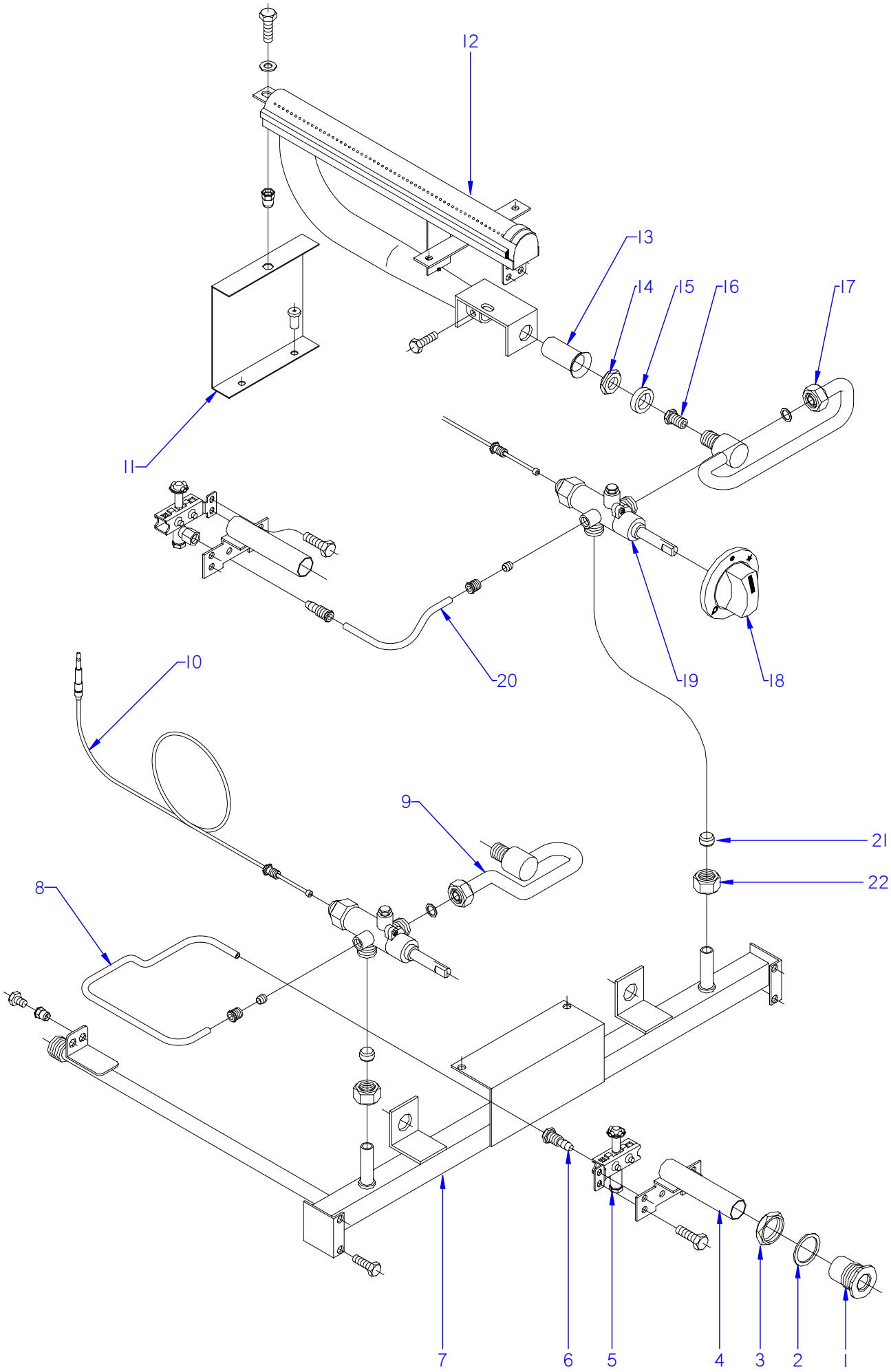

ITEM MARCADO EN COLOR = REPUESTO RECOMENDADO
COLOURED ITEM = RECOMMENDED SPARE PART

N plano	Firma	Fecha	Aparato	PARTE FUNCIONAL / FUNCTIONAL PART	Lamina	
C-2674		2010-06	FRY-TOP PL-105L; R / PL-110L; R		2	Fagor Industrial S.Coop. FAGOR Onate

MOD.	FRY-TOP	ZONA / ZONE	PARTE FUNCIONAL / FUNCTIONAL PART	PLANO DIAGRAM	C-2674

ITEM	CODIGO CODE	DENOMINACION	NAME	PL-105	PL-110						
1	S112804000	EMBELLECED. TUBO ENCENDIDO	IGNITION PIPE TRIM	2	3						
2	Q306027000	ARANDELA Ø33,8xØ27x1,5	WASHER Ø33,8xØ27x1,5	2	3						
3	Q221324000	TUERCA 3/4 GAS	NUT 3/4 GAS	2	3						
4	R535014000	TUBO ENCENDIDO COMPLETO	COMPLETE IGNITION PIPE	2	3						
	Q012031000	TORNILLO EXAGONAL M5x10 A304	HEXAGONAL BOLT M5x10 A304	4	6						
	Q221342000	REMACHE EXAGONAL M5	HEXAGONAL RIVET M5	1	2						
5	U322118000	PILOTO COMPLETO 100.062	COMPLETE PILOT LIGHT 100,062	2	3						
S/Nº	U442137000	INYECTOR Ø 0,4 GN	INJECTOR Ø 0.4 GN.	2	3						
6	U134323000	RACORD BICONO 6 958.031	BICONE CONNECTION 6 958.031	2	3						
7	R525020000	CONDUCCION GENERAL PL-105	MAIN PIPE PL-105	1	-						
7	R535049000	CONDUCCION GENERAL PL-110	MAIN PIPE PL-110	-	1						
	Q012031000	TORNILLO EXAGONAL M5x10 A304	HEXAGONAL BOLT M5x10 A304	4	6						
8	R535041000	TUBO PILOTO IZQUIERDO	LEFT PILOT PIPE	1	1						
9	R535043000	CONDUC. QUEMADOR IZQUIERDO	LEFT BURNER PIPE	1	1						
10	U222130000	TERMOPAR L=600	THERMOCOUPLE L=600	2	3						
11	R532600000	SOPORTE QUEMADOR	BURNER SUPPORT	2	3						
	Q221342000	REMACHE EXAGONAL M5	HEXAGONAL RIVET M5	2	3						
	Q419005000	REMACHE 4X8 ALMG3 / ALUMINIO	RIVET 4X8 ALMG3 / ALUMINIUM	4	6						
12	R535700000	QUEMADOR PL-105 - PL-110	BURNER PL-105 - PL-110	2	3						
	Q012031000	TORNILLO EXAGONAL M5x10 A304	HEXAGONAL BOLT M5x10 A304	2	3						
	Q302022000	ARANDELA 16X6X1.2 A.304	WASHER 16X6X1.2 A.304	2	3						
13	U325707000	REGULADOR DE AIRE	AIR REGULATOR	2	3						
	Q012032000	TORNILLO EXAGONAL M5X15 A.304	HEXAGONAL BOLT M5X15 A.304	2	3						
14	Q223019000	TUERCA 3/8 GAS LATÓN	NUT 3/8 GAS BRASS	2	3						
15	Q301323000	ARANDELA Ø25X17X6	WASHER Ø25X17X6	2	3						
16	U149402000	TOBERA DE Ø 1 B.P.	NOZZLE Ø 1, B.P.	2	3						
16	U112401000	TOBERA DE Ø 1,55 G.N.	NOZZLE Ø 1,55 G.N.	2	3						
16	R532400000	TOBERA DE Ø 3,2 G.V.	NOZZLE Ø 3,2 G.V.	2	3						
17	R535047000	CONDUC. QUEMADOR DERECHO	RIGHT BURNER PIPE	1	2						
	Q306055000	ARANDELA 16x10,3X1	WASHER 16x10,3X1	2	3						
18	U542101000	BOTON DE MANDO Ø10	CONTROL BUTTON Ø10	2	3						

MOD.	FRY-TOP	ZONA / ZONE	PARTE FUNCIONAL / FUNCTIONAL PART	PLANO DIAGRAM	C-2674

ITEM	CODIGO CODE	DENOMINACION	NAME	PL-105	PL-110						
19	U249401000	GRIFO CAL 3200 0.55	HW TAP 3200 0.55	2	3						
20	R535045000	TUBO PILOTO DERECHO	RIGHT PILOT PIPE	1	2						
	U195009000	MANGUITO EMPALME	CONNECTION HOSE	2	3						
	X205028000	BICONO Ø6	BICONE Ø6	2	3						
21	U055043000	BICONO Ø12	BICONE Ø12	2	3						
22	Q221336000	TUERCA M18X1,5 Ø12	NUT M18X1.5 Ø12	2	3						

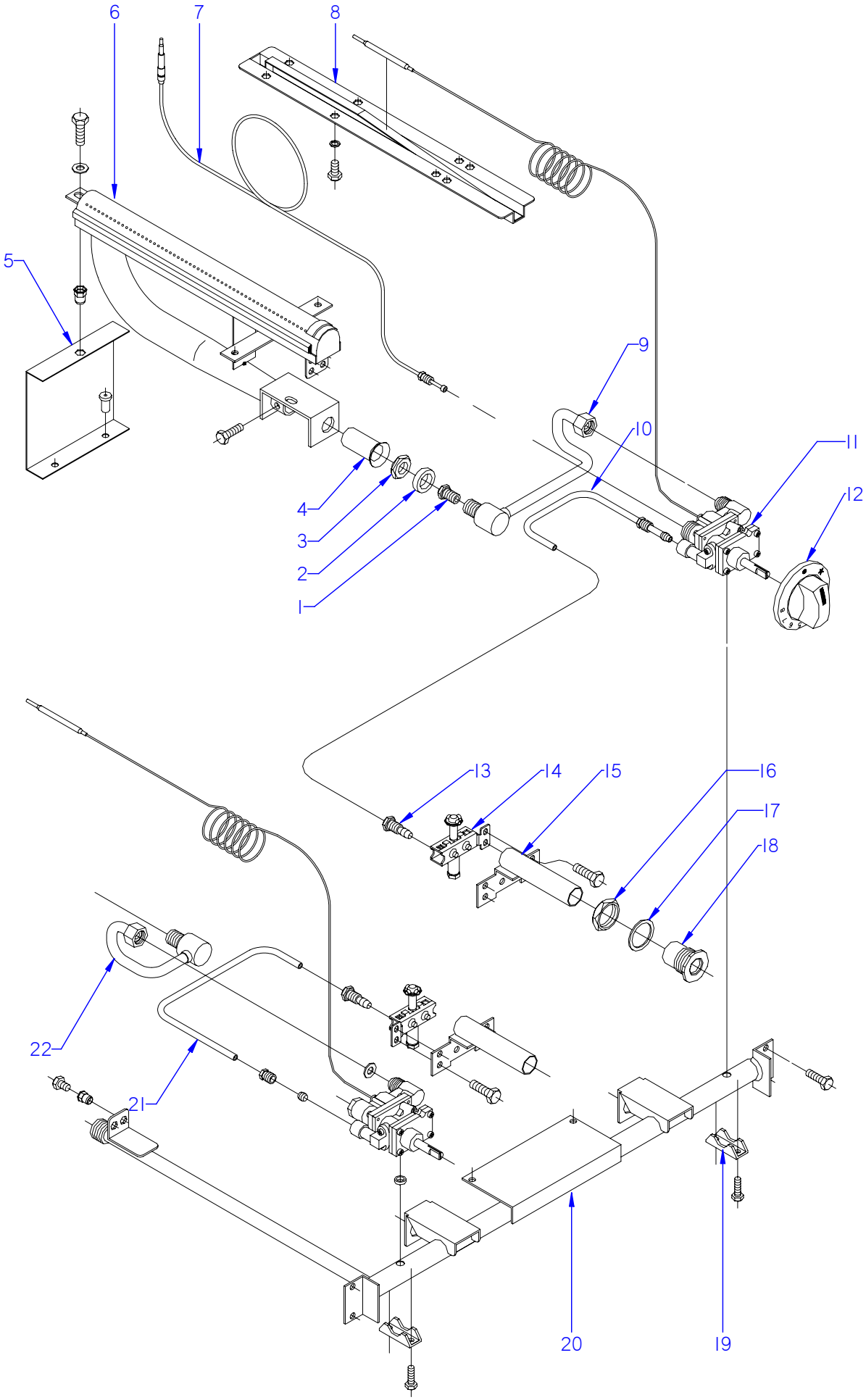

ITEM MARCADO EN COLOR = REPUESTO RECOMENDADO
COLOURED ITEM = RECOMMENDED SPARE PART

N plano	Firma	Fecha	Aparato	Lamina	
C-2675		2010-06	PARTE FUNCIONAL / FUNCTIONAL PART FRY-TOP PL-105CD / PL-110CD	3	Fagor Industrial S.Coop. FAGOR Oñate

MOD.	FRY-TOP	ZONA / ZONE	PARTE FUNCIONAL / FUNCTIONAL PART	PLANO DIAGRAM	C-2675

ITEM	CODIGO CODE	DENOMINACION	NAME	PL-105 CD	PL-110 CD						
1	U149402000	TOBERA DE Ø 1 B.P.	NOZZLE Ø 1, B.P.	2	3						
1	U112401000	TOBERA DE Ø 1,55 G.N.	NOZZLE Ø 1,55 G.N.	2	3						
1	R532400000	TOBERA DE Ø 3,2 G.V.	NOZZLE Ø 3,2 G.V.	2	3						
2	Q301323000	ARANDELA Ø25X17X6	WASHER Ø25X17X6	2	3						
3	Q223019000	TUERCA 3/8 GAS LATÓN	NUT 3/8 GAS BRASS	2	3						
4	U325707000	REGULADOR DE AIRE	AIR REGULATOR	2	3						
	Q012032000	TORNILLO EXAGONAL M5X15 A.304	HEXAGONAL BOLT M5X15 A.304	2	3						
5	R532600000	SOPORTE QUEMADOR	BURNER SUPPORT	2	3						
	Q221342000	REMACHE EXAGONAL M5	HEXAGONAL RIVET M5	2	3						
6	R535700000	QUEMADOR PL-105 - PL-110	BURNER PL-105 - PL-110	2	3						
	Q012031000	TORNILLO EXAGONAL M5x10 A304	HEXAGONAL BOLT M5x10 A304	2	3						
	Q302022000	ARANDELA 16X6X1.2 A.304	WASHER 16X6X1.2 A.304	2	3						
7	U222130000	TERMOPAR L=600	THERMOCOUPLE L=600	2	3						
8	R162631000	BASE SOPORTE BULBO	BASE BULB SUPPORT	2	3						
S/Nº	R162632000	SOPORTE BULBO	BULB SUPPORT	2	3						
	Q419005000	REMACHE 4X8 ALMG3 / ALUMINIO	RIVET 4X8 ALMG3 / ALUMINIUM	4	6						
	Q162040000	TUERCA EXAGONAL M6	HEXAGONAL NUT M6	2	3						
9	R535064000	CONDUC. QUEMADOR DERECHO	RIGHT BURNER PIPE	1	1						
10	R535060000	TUBO PILOTO DERECHO	RIGHT PILOT PIPE	1	1						
11	R532105000	TERMOSTATO C. S. MTZ-22300	THERMOSTAT C. S. MTZ-22300	2	3						
12	H352102000	BOTON DE MANDO BMG	CONTROL BUTTON BMG	2	3						
13	U134323000	RACORD BICONO 6 958.031	BICONE CONNECTION 6 958.031	2	3						
14	U322118000	PILOTO COMPLETO 100.062	COMPLETE PILOT LIGHT 100,062	2	3						
S/Nº	U442137000	INYECTOR Ø 0,4 GN	INJECTOR Ø 0.4 GN.	2	3						
15	R535014000	TUBO ENCENDIDO COMPLETO	COMPLETE IGNITION PIPE	2	3						
	Q012031000	TORNILLO EXAGONAL M5x10 A304	HEXAGONAL BOLT M5x10 A304	4	6						
	Q221342000	REMACHE EXAGONAL M5	HEXAGONAL RIVET M5	1	1						
16	Q221324000	TUERCA 3/4 GAS	NUT 3/4 GAS	2	3						
17	Q306027000	ARANDELA Ø33,8xØ27x1,5	WASHER Ø33,8xØ27x1,5	2	3						
18	S112804000	EMBELLECED. TUBO ENCENDIDO	IGNITION PIPE TRIM	2	3						

MOD.	FRY-TOP	ZONA / ZONE	PARTE FUNCIONAL / FUNCTIONAL PART	PLANO DIAGRAM	C-2675

ITEM	CODIGO CODE	DENOMINACION	NAME	PL-105 CD	PL-110 CD						
19	Z982018000	BRIDA AMARRE	CLAMPING FLANGE	2	3						
	Q012041000	TORNILLO EXAGONAL M6X10	HEXAGONAL BOLT M6X10	4	6						
20	R525022000	CONDUCCION GENERAL	MAIN PIPE	1	-						
20	R535051000	CONDUCCION GENERAL	MAIN PIPE	-	1						
	Q012031000	TORNILLO EXAGONAL M5x10 A304	HEXAGONAL BOLT M5x10 A304	4	6						
21	R535059000	TUBO PILOTO IZQUIERDO	LEFT PILOT PIPE	1	1						
	U195009000	MANGUITO EMPALME	CONNECTION HOSE	2	3						
	X205028000	BICONO Ø6	BICONE Ø6	2	3						
22	R535062000	CONDUC. QUEMADOR IZQUIERDO	LEFT BURNER PIPE	1	1						

MOD.	FRY-TOP	ZONA / ZONE	VARIOS / MISCELLANEOUS	PLANO DIAGRAM	

ITEM	CODIGO CODE	DENOMINACION	NAME	PL-105 L	PL-105 C	PL-110 L	PL-110 R	PL-110 L+R	PL-110 C		NOTAS
	R536500000	FOLLETO DE INSTRUCC. FTG9-11	INSTRUCTION LEAFLET FTG9-11	1	1	1	1	1	1		
	R636500000	RASQUETA MARTOR	MARTOR SCRAPER	-	1	-	-	-	1		