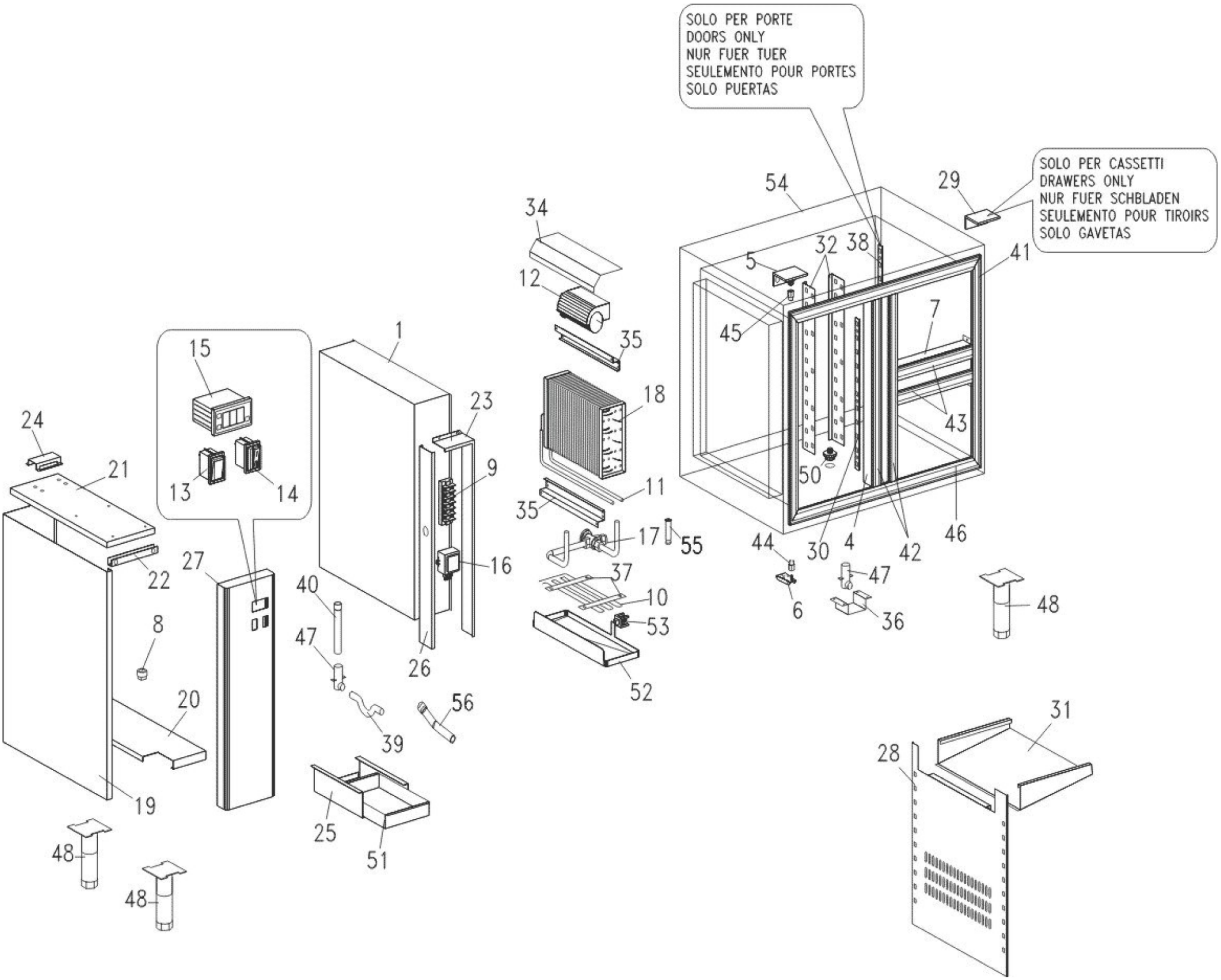
SOLO PER PORTE
DOORS ONLY
NUR FUER TUER
SEULEMENTO POUR PORTES
SOLO PUERTAS
SOLO PER CASSETTI
DRAWERS ONLY
NUR FUER SCHBLADEN
SEULEMENTO POUR TIROIRS
SOLO GAVETAS
1
4
5
6
7
8
9
10
11
12
13
14
15
16
17
18
19
20
21
22
23
24
25
26
27
28
29
30
31
32
34
35
36
37
38
39
40
41
42
43
44
45
46
47
48
50
51
52
53
54
55
56

Modello Typ Model Modele Modelo

		WM1A WM1A/X WM1A/A	WM1A/2 WM1A/2X WM1A/2A	WM1B WM1B/X WM1B/A	WM1B/2 WM1B/2X WM1B/2A	WM1B/4 WM1B/4X WM1B/4A	WM1C WM1C/X WM1C/A	WM1C/2 WM1C/2X WM1C/2A	WM1C/4 WM1C/4X WM1C/4A	WM1C/6 WM1C/6X WM1C/6A
Num. Cassetti Schublad Drawers Tiroirs Gabetas	1/2	---	2	---	2	4	---	2	4	6
	1/3	---	---	---	---	---	---	---	---	---
	2/3	---	---	---	---	---	---	---	---	---

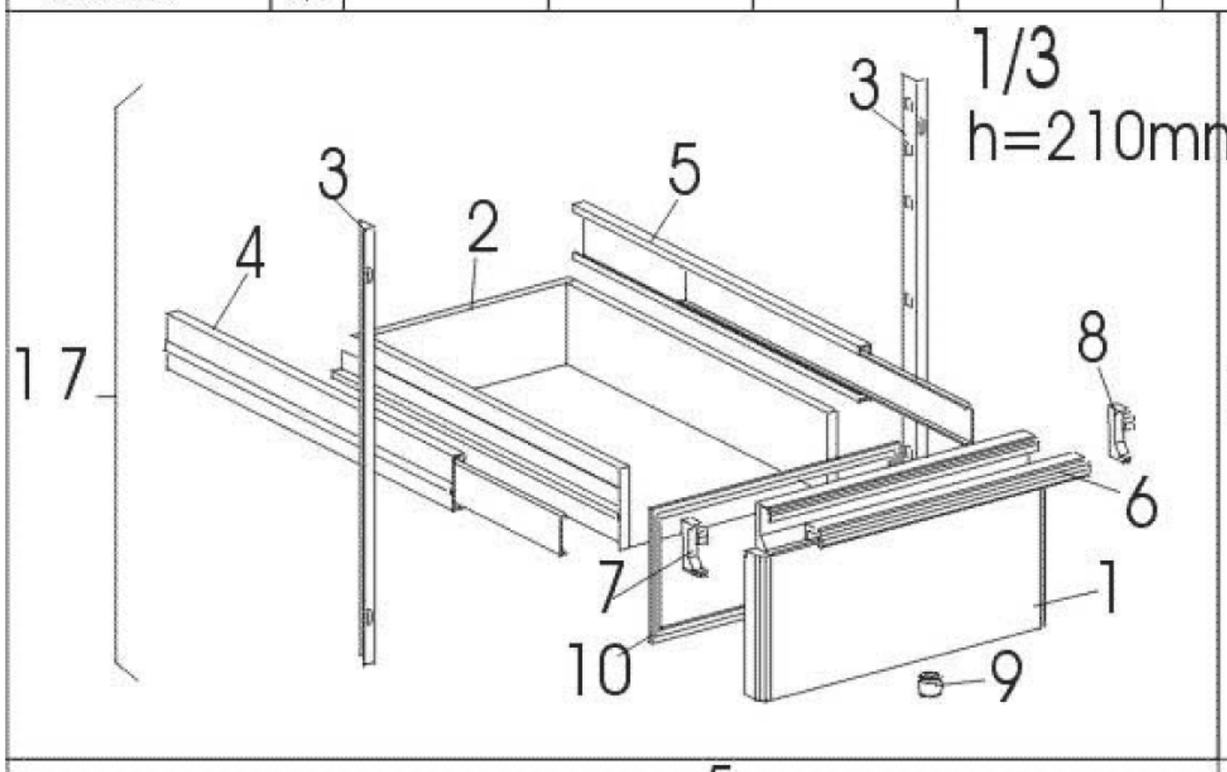

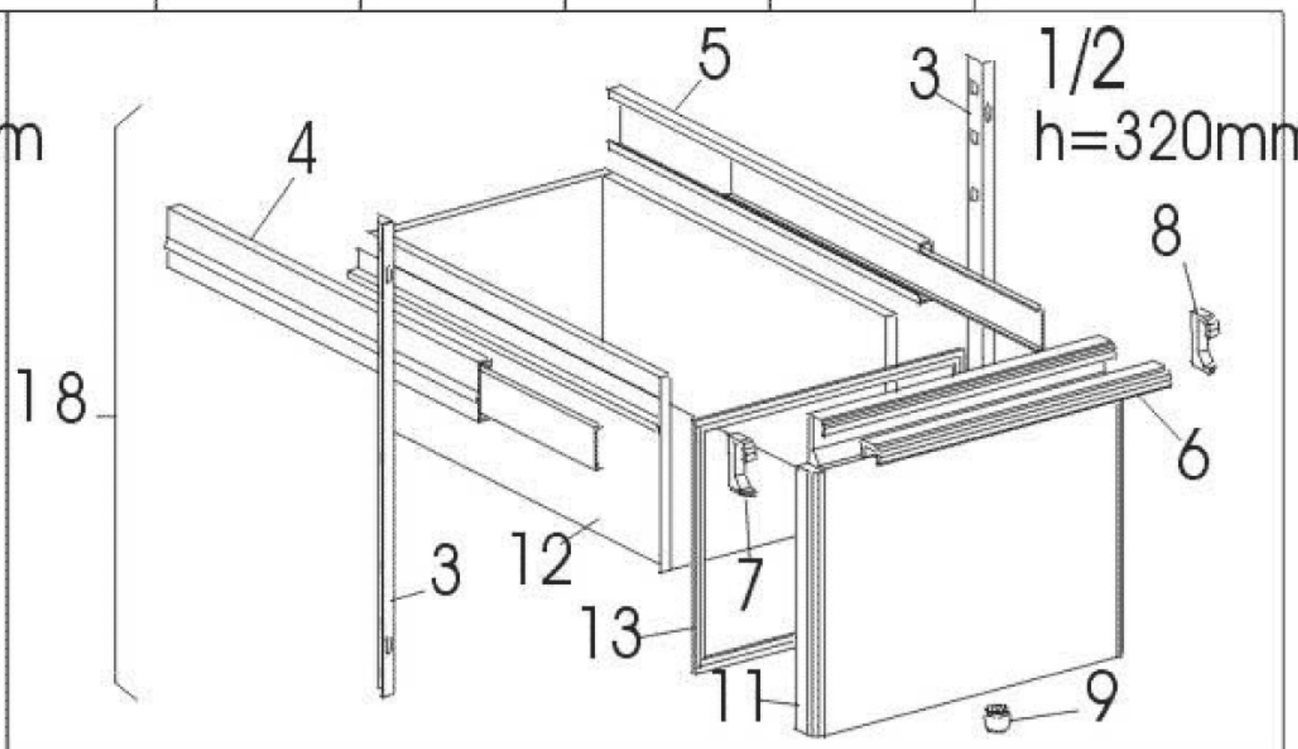

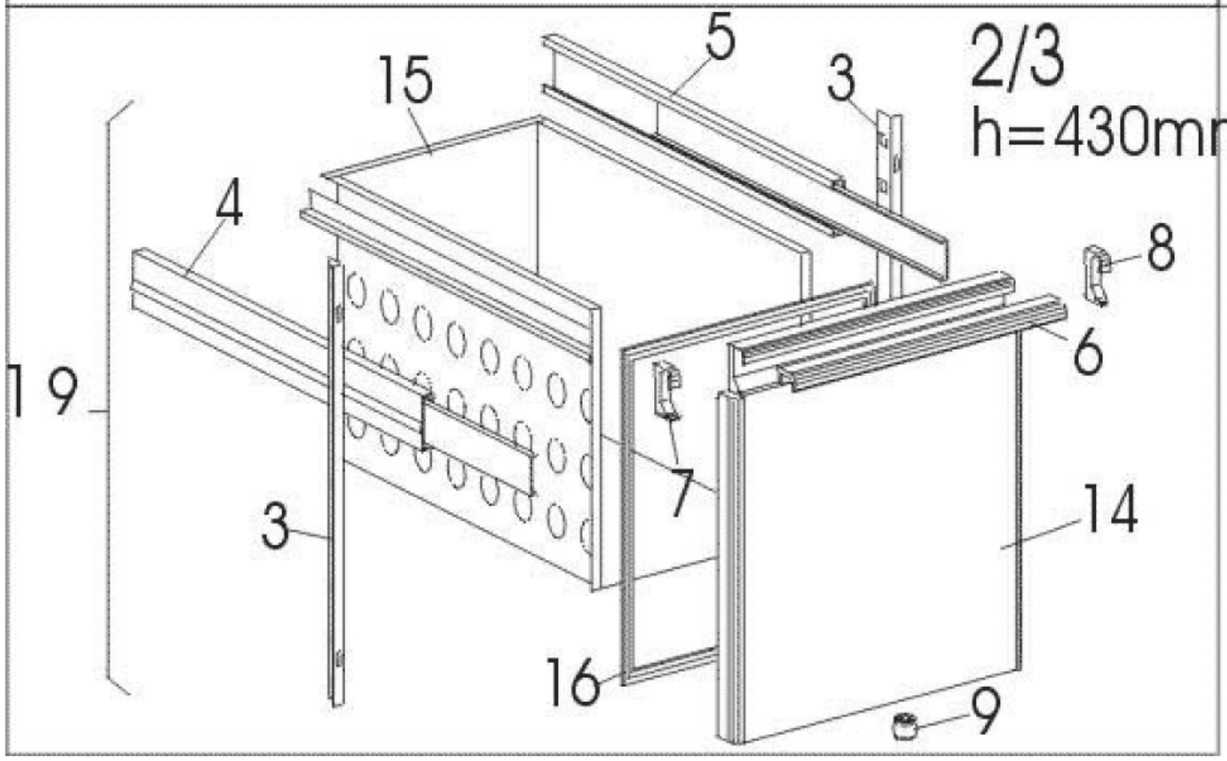

Modello Typ Model Modele Modelo

		WM1A WM1A/X WM1A/A	WM1A/2 WM1A/2X WM1A/2A	WM1B WM1B/X WM1B/A	WM1B/2 WM1B/2X WM1B/2A	WM1B/4 WM1B/4X WM1B/4A	WM1C WM1C/X WM1C/A	WM1C/2 WM1C/2X WM1C/2A	WM1C/4 WM1C/4X WM1C/4A	WM1C/6 WM1C/6X WM1C/6A
Porte Ture Doors Portes Portas Gabetas	SX	1	1	2	2	1	3	3	2	1
	DX	1	---	1	---	---	1	---	---	---

