DESPIECE TECNICO

Marmita a gas de baño maría
Gas indirect boling pans
Marmites à gaz systême bain-marie
Gas kochkessel indirekt beheizt
Pentole riscaldamento indiretto a gas
Marmita a gas de banho-maria

GAMA 900

Modelos:

MG9-10 BM AD
MG9-15 BM AD

Octubre 2011 October

FAGOR

FAGOR INDUSTRIAL

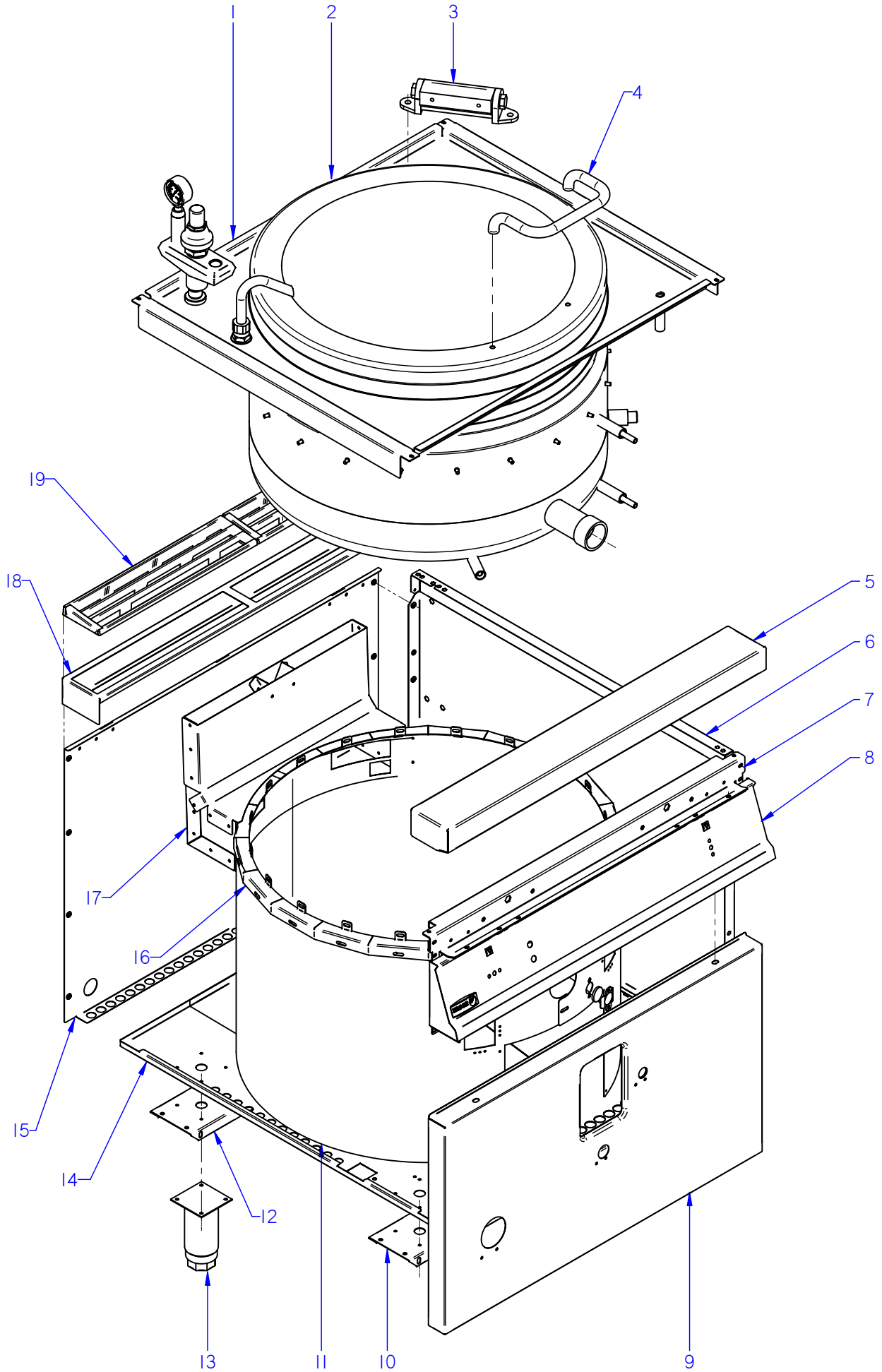

ITEM MARCADO EN COLOR = REPUESTO RECOMENDADO
COLOURED ITEM = RECOMMENDED SPARE PART

Nº plano / N º plane	Firma	Fecha / Date	Denominación / Denomination: MUEBLE / FITTING	Lamina / Sheet	
C-2909		2011-10	MARMITAS MG9-10 BM AD/ 15 BM AD	1	Fagor Industrial S.Coop. FAGOR Onate

MOD.	MARMITAS / BOILING PANS	ZONA / ZONE	MUEBLE / FITTING	PLANO DIAGRAM	C-2909

ITEM	CODIGO REFERENCE	DENOMINACION	DENOMINATION	MG9-10 BM AD	MG9-10 BM S AD	MG9-15 BM AD	MG9-15 BM S AD					ELIMINADO ELIMINATED	INTRODUCID. INTRODUCED	NOTAS
1	S266107000	ENCIMERA BM G9-00 AD	TOP BM G9-00 AD	1	1	1	1							
2	S266111000	CUBA+TAPA MG9-10 BM AD	TUB+COVER MG9-10 BM AD	1	1	_	_							
2	S266101000	CUBA+TAPA MG9-15 BM AD	TUB+COVER MG9-15 BM AD	_	_	1	1							
S/Nº	S266112000	CUBA COMPLETA MG9-10 BM AD	COMPLETE TUB MG9-10 BM AD	1	1	_	_							
S/Nº	S266102000	CUBA COMPLETA MG9-15 BM AD	COMPLETE TUB MG9-15 BM AD	_	_	1	1							
S/Nº	S266106000	TAPA COMPLETA	COMPLETE COVER	1	1	1	1							
S/Nº	S016101000	FILTRO DE CUBA	TUB FILTER	1	1	1	1							
	S036117000	SOPORTE FILTRO	FILTER SUPPORT	2	2	2	2							
	Q412000000	REMACHE TUBULAR 4x8	TUBULAR RIVET 4x8	8	8	8	8							
S/Nº	9294600000	MIRILLA CRISTAL	INSPECTION WINDOW	1	1	1	1							
S/Nº	S312617000	TAPA MIRILLA	INSPECTION WINDOW COVER	1	1	1	1							
	Q221342000	REMACHE EXAGONAL M5	HEXAGONAL RIVET M5	2	2	2	2							
	Q012031000	TORNILLO EXAGONAL M5x10 A304	HEXAGONAL BOLT M5x10 A304	2	2	2	2							
3	X026123000	BISAGRA ADVANCE	HINGE ADVANCE	1	1	1	1							
4	S266124000	ASA DE TAPA AD	COVER HANDLE AD	1	1	1	1							
	S262678000	CASQUILLO AMARRE TAPA	BUSHING COVER CAP	2	2	2	2							
	Q012021000	TORNILLO EXAGONAL M4X10	HEXAGONAL BOLT M4X10	2	2	2	2							
5	S105403000	ANTERIOR DE MESA 1M	BENCH FRONT 1M	1	_	1	_							
	Q152004000	TORNILLO APLAST. M5x13 A304	MUSHROOM HEAD BOLT M5x13	2	_	2	_							
	Q302022000	ARANDELA 16x6x1,2 A304	WASHER 16x6x1.2 A304	2	_	2	_							
6	X162814000	PANEL LATERAL DERECHO G900	RIGHT SIDE PANEL G900	1	_	1	_							
6	S142806000	PANEL LATERAL DERECH. G9-00S	RIGHT SIDE PANEL G9-00S	_	1	_	_							
6	S222808000	PANEL LATERAL DERECH. G9-00S	RIGHT SIDE PANEL G9-00S	_	_	_	1							
S/Nº	X162813000	PANEL LATERAL IZQUIERDO G900	LEFT SIDE PANEL G900	1	_	1	_							
S/Nº	S142805000	PANEL LATERAL IZQUIERD. G900S	LEFT SIDE PANEL G900S	_	1	_	_							
S/Nº	S222807000	PANEL LATERAL IZQUIERD. G915S	LEFT SIDE PANEL G915S	_	_	_	1							
	Q221343000	REMACHE EXAGONAL M6	HEXAGONAL RIVET M6	22	_	22	_							
	Q221342000	REMACHE EXAGONAL M5	HEXAGONAL RIVET M5	12	12	12	12							
	Q012053000	TORNILLO EXAGONAL M8x20 A304	HEXAGONAL BOLT M8x20 A304	4	_	4	_							
	Q012031000	TORNILLO EXAGONAL M5x10 A304	HEXAGONAL BOLT M5x10 A304	_	2	_	2							

MOD.	MARMITAS / BOILING PANS	ZONA / ZONE	MUEBLE / FITTING	PLANO DIAGRAM	C-2909

ITEM	CODIGO REFERENCE	DENOMINACION	DENOMINATION	MG9-10 BM AD	MG9-10 BM S AD	MG9-15 BM AD	MG9-15 BM S AD					ELIMINADO ELIMINATED	INTRODUCID. INTRODUCED	NOTAS
7	S262607000	ESCUADRA INTERIOR MESA 1M	INTERIOR SQUARE TABLE 1M	1	1	1	1							
	Q221342000	REMACHE EXAGONAL M5	HEXAGONAL RIVET M5	7	7	7	7							
	Q012032000	TORNILLO EXAGONAL M5X15	HEXAGONAL BOLT M5x15	6	6	6	6							
8	S162807000	PORTAMANDOS MARMITA 1M	PAN CONTROL HOLDER 1M	1	1	1	1							
	Q152004000	TORNILLO APLAST. M5x13 A304	MUSHROOM HEAD BOLT M5x13	4	4	4	4							
	Q221343000	REMACHE EXAGONAL M6	HEXAGONAL RIVET M6	2	2	2	2							
	Q151336000	TORNILLO SOPORTE GUIAS	GUIDE SUPPORT BOLT	2	2	2	2							
	Q302022000	ARANDELA 16x6x1,2 A304	WASHER 16x6x1.2 A304	2	2	2	2							
	U022836000	ESCUDO FAGOR	FAGOR EMBLEM	1	1	1	1							
	Q221023000	CLIP SUJECIÓN RÁPIDA Ø 5	RAPID FASTENING CLIP Ø5	2	2	2	2							
9	S262805000	PANEL FRONTAL MG9-10 BM AD	FRONT PANEL MG9-10BM AD	1	_	_	_							
9	S262809000	PANEL FRONTAL MG9-10 BMS AD	FRONT PANEL MG9-10 BMS AD	_	1	_	_							
9	S262803000	PANEL FRONTAL MG9-15 BM AD	FRONT PANEL MG9-15 BM AD	_	_	1	1							
	Q012042000	TORNILLO EXAGONAL M6x15	HEXAGONAL BOLT M6x15	2	2	2	2							
	Q302022000	ARANDELA 16x6x1,2 A304	WASHER 16x6x1.2 A304	2	2	2	2							
10	S262652000	LISTON SOPORTE PATAS ANT.1M	FRONT LEG SUPPORT STRIP 1M	1	_	1	_							
11	S262635000	ENVOLVENTE MG9-10 BM AD	ENCLOSURE MG9-10 BM AD	1	_	_	_							
11	S262663000	ENVOLVENTE MG9-10 BM S AD	ENCLOSURE MG9-10 BM S AD	_	1	_	_							
11	S262610000	ENVOLVENTE MG9-15 BM AD	ENCLOSURE MG9-15 BM AD	_	_	1	1							
	Q151323000	TORNILLO BROCA 4,8X16	DRILL BIT SCREW 4.8X16	26	26	26	26							
12	S262653000	LISTON SOPORTE PATAS POS.1M	REAR LEG SUPPORT STRIP 1M	1	_	1	_							
	Q012042000	TORNILLO EXAGONAL M6x15	HEXAGONAL BOLT M6x15	8	_	8	_							
	Q302022000	ARANDELA 16x6x1,2 A304	WASHER 16x6x1.2 A304	8	_	8	_							
	Q232040000	ARANDELA A6	WASHER A6	8	_	8	_							
13	X260151000	PATA REGULABLE	ADJUSTABLE LEG	4	_	4	_							
	Q411304000	REMACHE AVIBULB Ø4,8	AVIBULB RIVET Ø4.8	16	_	16	_							
14	S262601000	BASE INFERIOR AD	LOWER BASE AD	1	_	1	_							
14	S262642000	BASE INFERIOR S AD	LOWER BASE S AD	_	1	_	_							
14	S262615000	BASE INFERIOR MG9-15 S AD	LOWER BASE MG9-15 S AD	_	_	_	1							
	Q221343000	REMACHE EXAGONAL M6	HEXAGONAL RIVET M6	2	2	2	2							
	Q162040000	TUERCA EXAGONAL M6	HEXAGONAL NUT M6	4	_	4	_							

MOD.	MARMITAS / BOILING PANS	ZONA / ZONE	MUEBLE / FITTING	PLANO DIAGRAM	C-2909

ITEM	CODIGO REFERENCE	DENOMINACION	DENOMINATION	MG9-10 BM AD	MG9-10 BM S AD	MG9-15 BM AD	MG9-15 BM S AD					ELIMINADO ELIMINATED	INTRODUCID. INTRODUCED	NOTAS
15	X022841000	PANEL POSTERIOR 1M G9-00 AD	REAR PANEL 1M G9-00 AD	1	_	1	_							
15	S262806000	PANEL POSTERIOR 1M G9-10S AD	REAR PANEL 1M G9-10S AD	_	1	_	_							
15	S262804000	PANEL POSTERIOR 1M G9-10S AD	REAR PANEL 1M G9-10S AD	_	_	_	1							
	Q419005000	REMACHE 4x8 ALMG3 / ALUMINIO	RIVET 4X8 ALMG3 / ALUMINIUM	8	8	8	8							
16	S262616000	VIROLA MG900 BM AD	SHELL MG900 BM AD	2	2	2	2							
	Q162040000	TUERCA EXAGONAL M6	HEXAGONAL NUT M6	20	20	20	20							
	Q302022000	ARANDELA 16x6x1,2 A304	WASHER 16x6x1.2 A304	20	20	20	20							
17	S262634000	ANTERI. CHIMENEA MG9-10BM AD	FRONT FLUEPIPE MG9-10BM AD	1	1	_	_							
17	S262605000	ANTERI. CHIMENEA MG9-15BM AD	FLUEPIPE FRONT MG9-15BM AD	_	_	1	1							
S/Nº	S262633000	POSTE. CHIMENEA MG9-10BM AD	REAR FLUEPIPE MG9-10BM AD	1	1	_								
S/Nº	S262604000	POSTE. CHIMENEA MG9-15BM AD	REAR FLUEPIPE MG9-15BM AD	_	_	1	1							
18	R205439000	SOPORTE EMBELLECEDOR 1M	TRIM SUPPORT 1M	1	1	1	1							
19	R205425000	EMBELLECEDOR ESMALTE	ENAMEL TRIM	2	2	2	2							

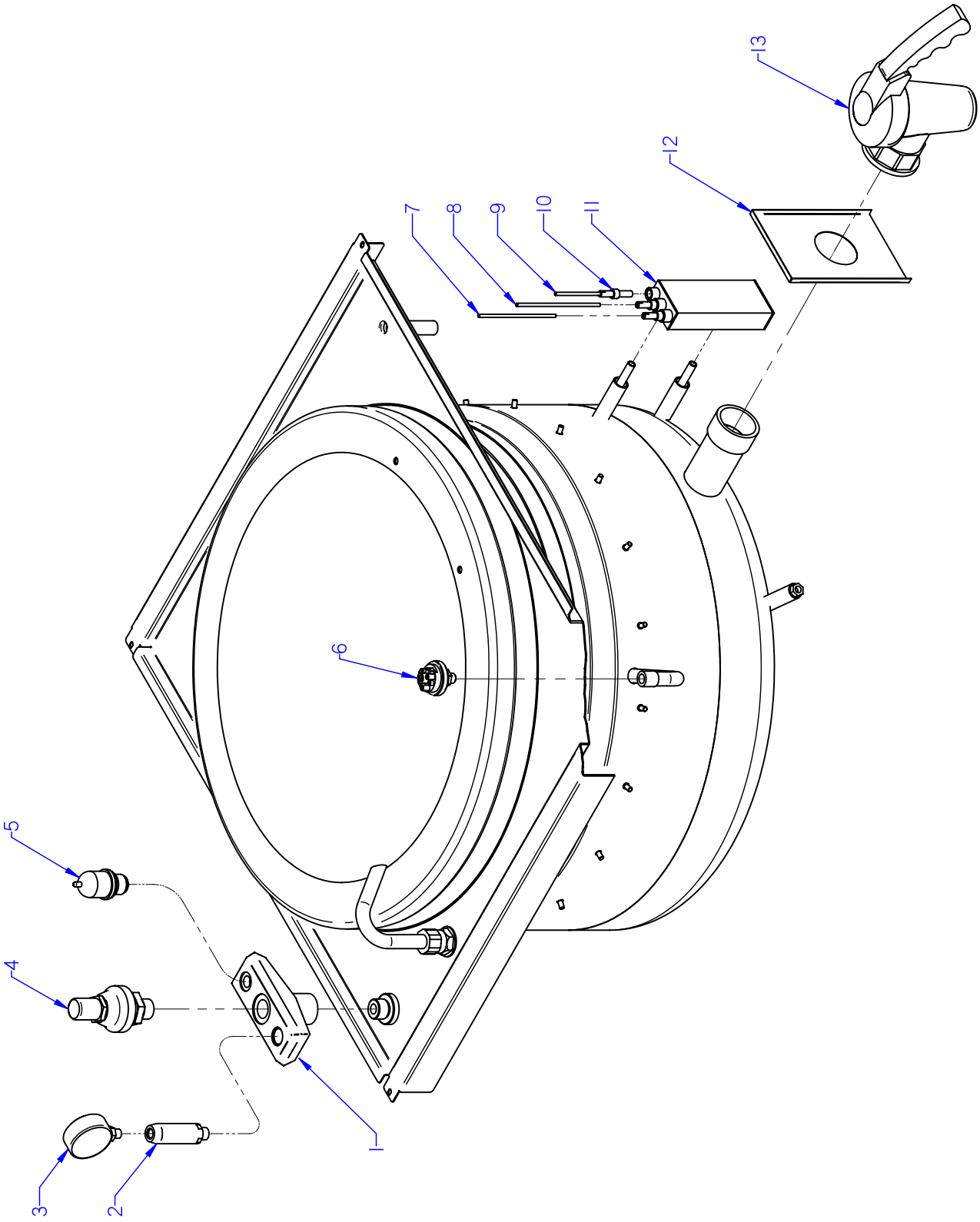

ITEM MARCADO EN COLOR = REPUESTO RECOMENDADO
COLOURED ITEM = RECOMMENDED SPARE PART

Nº plano / N º plane	Firma	Fecha / Date	Denominación / Denomination: VALVULAS / VALVES	Lamina / Sheet	
C-2910		2011-10	MARMITAS MG9-10 BM AD/ 15 BM AD	2	Fagor Industrial S.Coop. FAGOR Oñate

MOD.	MARMITAS / BOILING PANS	ZONA / ZONE	VALVULAS / VALVES	PLANO DIAGRAM	C-2910

ITEM	CODIGO REFERENCE	DENOMINACION	DENOMINATION	MG9-10 BM AD	MG9-10 BM S AD	MG9-15 BM AD	MG9-15 BM S AD					ELIMINADO ELIMINATED	INTRODUCID. INTRODUCED	NOTAS
1	S022100000	SOPORTE 3 SALIDAS 22805062	3-OUTPUT SUPPORT 22805062	1	1	1	1							
	Q306063000	ARANDELA Ø34x26,7x1,5	WASHER Ø34x26.7x1.5	1	1	1	1							
2	S022102000	PORTAMANOMETRO 2210617	MANOMETERHOLDER 2210617	1	1	1	1							
	Q306066000	ARANDELA Ø23,9x16,6x3	WASHER Ø23.9X16.6X3	1	1	1	1							
3	9220815000	MANOMETRO 36303601	MANOMETER 36303601	1	1	1	1							
4	S022101000	VALVULA SEGURIDAD 01508004	SAFETY VALVE 01508004	1	1	1	1							
	Q306063000	ARANDELA Ø34x26,7x1,5	WASHER Ø34x26.7x1.5	1	1	1	1							
5	S022103000	VALVULA PRESION 01509004	PRESSURE VALVE 01509004	1	1	1	1							
	Q306064000	ARANDELA Ø29,8x24,8x1,5	WASHER Ø29.8x24.8x1.5	1	1	1	1							
6	S093000000	PRESOSTATO	PRESSOSTAT	1	1	1	1							
7	R345063000	ELECTRODO DE NIVEL BAJO	LOW LEVEL ELECTRODE	1	1	1	1							
8	R345064000	ELECTRODO DE MASA	EARTH ELECTRODE	1	1	1	1							
9	R345060000	ELECTRODO DE NIVEL ALTO	HIGH LEVEL ELECTRODE	1	1	1	1							
10	R345069000	GUIA AISLANTE	INSULATION GUIDE	3	3	3	3							
11	S263001000	BOTE DE NIVELES	LEVELS VESSEL	1	1	1	1							
12	S112803000	CUBIERTA GRIFO MG-900	TAP COVER MG-900	1	1	1	1							
S/Nº	S112105000	MUELLE SOPORTE CUBIER. 07003	COVER SUPPO. SPRING 07003	1	1	1	1							
13	S102125000	GRIFO VACIADO 2"	DRAINAGE TAP 2"	1	1	1	1							

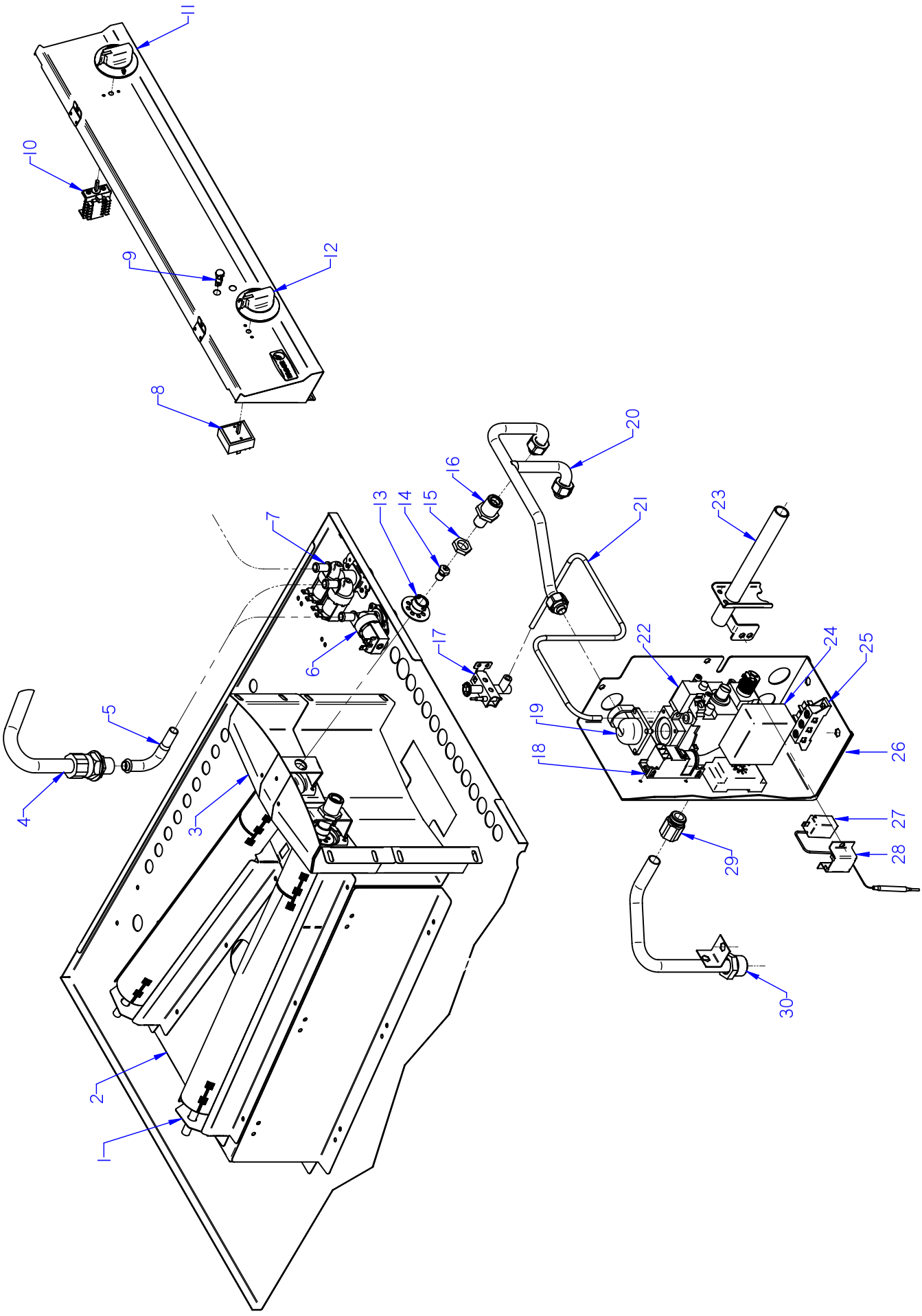

ITEM MARCADO EN COLOR = REPUESTO RECOMENDADO
COLOURED ITEM = RECOMMENDED SPARE PART

Nº plano / N º plane	Firma	Fecha / Date	Denominación / Denomination: PARTE FUNCIONAL / FUNCTIONAL PART	Lamina / Sheet	
C-2911		2011-10	MARMITAS MG9-10 BM AD/ 15 BM AD	3	Fagor Industrial S.Coop. FAGOR Oñate

MOD.	MARMITAS / BOILING PANS	ZONA / ZONE	PARTE FUNCIONAL / FUNCTIONAL PART	PLANO DIAGRAM	C-2911

ITEM	CODIGO REFERENCE	DENOMINACION	DENOMINATION	MG9-10 BM AD	MG9-10 BM S AD	MG9-15 BM AD	MG9-15 BM S AD					ELIMINADO ELIMINATED	INTRODUCID. INTRODUCED	NOTAS
1	S225701000	QUEMADOR DE POLIDORO MG900	POLIDORO BURNER MG900	2	2	2	2							
	Q012021000	TORNILLO EXAGONAL M4x10 A304	HEXAGONAL BOLT M4x10 A304	8	8	8	8							
2	S262636000	BASE QUEMADOR MG9-10 BM AD	BURNER BASE MG-910 BM AD	1	_	_	_							
2	S262640000	BASE QUEMAD. MG9-10 BM S AD	BURNER BASE MG-910 BM S AD	_	1	_	_							
2	S262609000	BASE QUEMADOR MG9-10BM AD	BURNER BASE MG9-10BM AD	_	_	1	1							
	Q419005000	REMACHE 4x8 ALMG3 / ALUMINIO	RIVET 4X8 ALMG3 / ALUMINIUM	_	10	10	10							
S/Nº	S262611000	DEFLECTOR DCHO. QUEMADOR A	RIGHT DEFLECTOR BURNER AD	1	1	1	1							
S/Nº	S262612000	DEFLECTOR IZDO. QUEMADOR AD	LEFT DEFLECTOR BURNER AD	1	1	1	1							
3	S262637000	FRONTAL QUEMA. MG9-10 BM AD	BURNER FRONT MG9-10 BM AD	1	1	_	_							
3	S262617000	FRONTAL QUEMADOR MG9-20 AD	BURNER FRONT MG9-20 AD	_	_	1	1							
	Q221342000	REMACHE EXAGONAL M5	HEXAGONAL RIVET M5	2	2	2	2							
	Q221341000	REMACHE EXAGONAL M4	HEXAGONAL RIVET M4	8	8	8	8							
4	S052100000	TUBO LLENADO 01102113	FILLER PIPE 01102113	1	1	1	1							
5	S565027000	TUBO ENTRADA TUBO LLENADO	INTAKE PIPE FILLER PIPE	1	1	1	1							
	Q306024000	JUNTA18X12.5X1.5	SEAL 18X12.5X1.5	1	1	1	1							
	Q223010000	TUERCA 1/2 GAS	NUT 1/2 GAS	1	1	1	1							
S/Nº	3676900000	TUBO GOMA NEGRA Ø 17*10	BLACK RUBBER PIPE 17*10	3	3	3	3							
	Q881308000	ABRAZADERA 8-14L	CLAMP 8-14L	6	6	6	6							
S/Nº	Z201106000	RACORD EN Y	Y-CONNECTION	1	1	1	1							
6	Z701135000	ELECTROVALVULA SIMP. 220V	SIMPLE SOLENOID VALVE 220V	2	2	2	2							
7	P255001000	ELECTROVALVULA DOBLE	DOUBLE SOLENOID VALVE	1	1	1	1							
	Z601156000	REGULADOR 8L RO. 254.034	REGULATOR 8L RED 254.034	2	2	2	2							
	Q032021000	TORNILLO ALOMADO M4X10	CURVED SCREW M4X10	4	4	4	4							
8	S333001000	REGULADOR DE ENERGIA	ENERGY REGULATOR	1	1	1	1							
S/Nº	R052102000	JUNTA COMPONENT. ELECTRICOS	BOARD OF ELECTRICAL COMP.	1	1	1	1							
9	Z313080000	PILOTO AMBAR Ø18	AMBER PILOT Ø18	1	1	1	1							
10	R693004000	CONMUTADOR DE FUNCIONES	FUNCTIONS SWITCH	1	1	1	1							
S/Nº	R052102000	JUNTA COMPONENT. ELECTRICOS	BOARD OF ELECTRICAL COMP.	1	1	1	1							
11	S142107000	MANDO AGUA MARMITA BM	WATER PAN CONTROL BM	1	1	1	1							
12	S162102000	BOTON DE MANDO	CONTROL BUTTON	1	1	1	1							

MOD.	MARMITAS / BOILING PANS	ZONA / ZONE	PARTE FUNCIONAL / FUNCTIONAL PART	PLANO DIAGRAM	C-2911

ITEM	CODIGO REFERENCE	DENOMINACION	DENOMINATION	MG9-10 BM AD	MG9-10 BM S AD	MG9-15 BM AD	MG9-15 BM S AD					ELIMINADO ELIMINATED	INTRODUCID. INTRODUCED	NOTAS
13	X505013000	REGULADOR DE AIRE POLIDORO	POLIDORO AIR CONTROL	2	2	2	2							
	Q012021000	TORNILLO EXAGONAL M4x10 A304	HEXAGONAL BOLT M4x10 A304	2	2	2	2							
14	9105100000	TOBERA Ø 1.50 BUT-PROPANO	NOZZLE Ø 1.50 BUT-PROPANE	2	2	_	_							
14	U134401000	TOBERA Ø 2,20 GAS NATURAL	NOZZLE Ø 2.20 GAS NATURAL	2	2	_	_							
14	N502401000	TOBERA Ø 1.70 BUT-PROPANO	NOZZLE Ø 1.70 BUT-PROPANE	_	_	2	2							
14	S222401000	TOBERA Ø 2,55 GAS NATURAL	NOZZLE Ø 2.55 GAS NATURAL	_	_	2	2							
15	Q223019000	TUERCA 3/8 GAS LATÓN	NUT 3/8 GAS BRASS	2	2	2	2							
16	X505724000	MANGUITO PORTATOBERAS	NOZZLE HOLDER SLEEVE	2	2	2	2							
17	U322118000	PILOTO COMPLETO BP 100.062	COMPL. PILOT BP 100.062	1	1	1	1							
	U442137000	INYECTOR Ø 0,4 (GAS NATURAL)	NOZZLE Ø 0.4 (GAS NATURAL)	1	1	1	1							
	Q221342000	REMACHE EXAGONAL M5	HEXAGONAL RIVET M5	2	2	2	2							
	Q012031000	TORNILLO EXAGON. M5x10 A304	HEXAGONAL BOLT. M5x10 A304	2	2	2	2							
	X022131000	BUJIA	SPARK PLUG	1	1	1	1							
S/Nº	U562130000	TERMOPAR L=850	THERMOCOUPLE L=850	1	1	1	1							
	U264301000	RACORD EMPALME TERMOPAR	THERMOC. JUNCTION RACORD	1	1	1	1							
18	X163014000	ENCENDEDOR PARA 2 BUJIAS	LIGHTER FOR 2 PLUGS	1	1	1	1							
19	X153004000	CODO 1-2 820NOV 906.260	ELBOW 1-2 820NOV 906,260	2	2	2	2							
20	S265019000	COND. QUEMADOR MG9-10 BM AD	PIPING BURNER MG9-10 BM AD	1	_	_	_							
20	S265022000	CON. QUEMADOR MG9-10 BMS AD	PIPING BURNER MG9-10 BMS AD	_	1	_	_							
20	S265004000	CONDUCC. QUEMADOR MG AD	PIPING TO BURNER MG AD	_	_	1	1							
	Q306024000	JUNTA 18X12.5X1.5	SEAL 18x12.5x1.5	3	3	3	3							
S/Nº	S205023000	MANGUITO DOBLE 1/2	DOUBLE SLEEVE 1/2	1	1	1	1							
21	S265020000	TUBO PILOTO MG9-10 BM AD	PILOT PIPE MG9-10 BM AD	1	_	_	_							
21	S265023000	TUBO PILOTO MG9-10 BM S AD	PILOT PIPE MG9-10 S AD	_	1	_	_							
21	S265006000	TUBO PILOTO MG9-20 AD	PILOT PIPE MG9-20 AD	_	_	1	1							
	U134323000	RACORD BICONO Ø 6 958.031	BICONE CONNECTION Ø 6 958.0	2	2	2	2							
22	X163000000	ELECTROVAL. NOVA 50HZ 820.018	SOLENOID VALVE NOVA 50 HZ	1	1	1	1							
S/Nº	X163009000	JUNTA CON. NOVA 960.104	SEAL NOVA 820.018	1	1	1	1							
23	S265012000	TUBO ENCENDIDO COMPLETO	COMPLETE IGNITION PIPE	1	1	1	1							
S/Nº	X082831000	TAPA TUBO ENCENDIDO COMPLET	FULL COVER ON TUBE	1	1	1	1							

MOD.	MARMITAS / BOILING PANS	ZONA / ZONE	PARTE FUNCIONAL / FUNCTIONAL PART	PLANO DIAGRAM	C-2911

ITEM	CODIGO REFERENCE	DENOMINACION	DENOMINATION	MG9-10 BM AD	MG9-10 BM S AD	MG9-15 BM AD	MG9-15 BM S AD					ELIMINADO ELIMINATED	INTRODUCID. INTRODUCED	NOTAS
24	R343072000	DETECTOR DE NIVELES	LEVEL DETECTOR	1	1	1	1							
S/Nº	R743009000	BASE ENCHUFABLE UNDECAL	UNDECAL BASE PLUG	1	1	1	1							
25	U183046000	REGLETA AUXILIAR	STRIP AUXILIARY	1	1	1	1							
	Q221342000	REMACHE EXAGONAL M5	HEXAGONAL RIVET M5	2	2	2	2							
	Q152004000	TORNILLO EXAGONAL M5X13 A304	HEXAGONAL BOLT M5X13 A304	2	2	2	2							
26	S262602000	CUADRO ELECTRIC MG AD	ELECTRIC TABLE MG AD	1	1	1	1							
27	X033001000	TERMOSTATO DE SEGURIDAD	SAFETY THERMOSTAT	1	1	1	1							
28	X353007000	SOPORTE TERMOSTATO SEG.	SAFETY THERMOSTAT SUPPORT	1	1	1	1							
	Q221341000	REMACHE EXAGONAL M4	HEXAGONAL RIVET M4	2	2	2	2							
	Q012021000	TORNILLO EXAGON. M4x10 A304	HEXAGONAL BOLT. M4x10 A304	2	2	2	2							
29	X012104000	MANGUITO DOBLE 1/2 958.027	DOUBLE SLEEVE 1/2 958.027	1	1	1	1							
	X012105000	BICONO Ø 16 957.008	BICONE Ø 16 957.008	1	1	1	1							
30	S265002000	COND. GRAL. MARMITAS G900 AD	GEN. PIPE PANS. G900 AD	1	_	1	_							
30	S265008000	COND. GRA. MARMITAS G900 SAD	GEN. PIPE PANS. G900 S AD	_	1	_	1							
	Q221342000	REMACHE EXAGONAL M5	HEXAGONAL RIVET M5	1	1	1	1							
S/Nº	Z602121000	MANGUERA ENTRADA AGUA	WATER INTAKE HOSE	_	2	_	2							

MOD.	MARMITAS / BOILING PANS	ZONA / ZONE	VARIOS / MISCELLANEOUS	PLANO DIAGRAM	

ITEM	CODIGO REFERENCE	DENOMINACION	DENOMINATION	MG9-10 BM AD	MG9-10 BM S AD	MG9-15 BM AD	MG9-15 BM S AD					ELIMINADO ELIMINATED	INTRODUCID. INTRODUCED	NOTAS
	S206501000	FOLLETO DE INSTRUCCIONES	INSTRUCTION LEAFLET	1	1	1	1							
	S263009000	ESQUEMA TEORICO MG910 AD	THEOR. DIAGRAM LABEL MG910	1	1	1	1							PLANO HC-82952
	S263010000	PLANO DE MONTAJE MG910 AD	ASSEMBLY PLAN MG910 AD	1	1	1	1							PLANO HC-82953
	X163002000	CABLE BUJIA	SPARK PLUG CABLE	1	1	1	1							
	X163008000	CABLE CON. 820 960.103	CON. 820 960.103 CABLE	1	1	1	1							
	R275027000	CABLEADO ELECTROS. 927.012	ELECTRICAL 927.012 WIRING	1	1	1	1							
	U323007000	CABLE ENCENDEDOR A BUJIA	LIGHTER TO SPARK PLUG CAB.	1	1	1	1							
	S263008000	INSTALACION ELECTR. MG910 AD	ELE INSTALLATION MG910 AD	1	1	1	1							

MG - 710BM MG - 910BM MG - 915BM

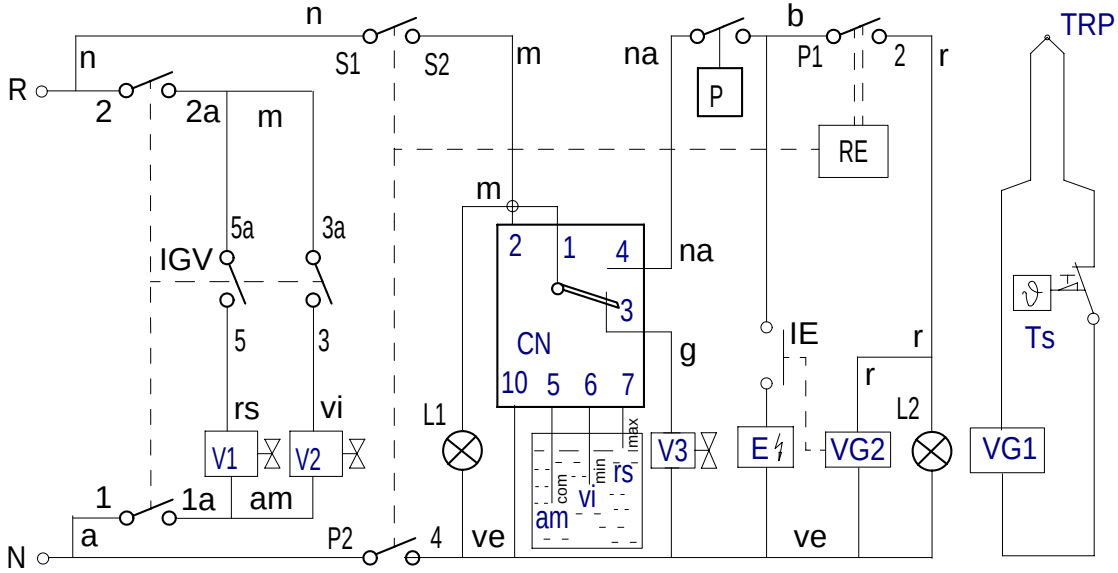

POSICION	% ±2%	P1 - 2 TON	P1 - 2 TON+TOF	P2 - 4	S1 - S2
0	0	0	∞		
52°	6%	3"	45"	X	X
84°	10%	4"	38"	X	X
116°	15%	5"	32"	X	X
148°	25%	7"	29"	X	X
180°	30%	9"	30"	X	X
212°	40%	13"	32"	X	X
244°	55%	21"	37"	X	X
276°	75%	45"	60"	X	X
308°	100%	∞	∞	X	X

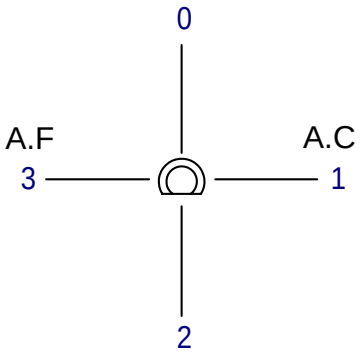

POSICION DIBUJADA 0

IGV	1 1a	2 2a	3 3a	4 4a	5 5a	6 6a
0						
1	X	X			X	X
2	X	X		X		X
3	X	X	X	X		

S263009000

	Esquema teorico ME-710BM, ME-910BM		S263009000		
Nº	Pieza	Material	Nº Clasificacion	Acabado	
Nº	Modificacion	Propuesta de	Fecha	Tolerancias generales	
				<5± :	50–100± :
				5–25± :	>100±
				25–50± :	∝±

	Firma	Fecha
Dibujado	M.Maillo	30-06-2010
Proyectado	M.Maillo	30-06-2010
Comprobado	ENERITZ	30-06-2010
Escala		

FAGOR

Fagor Industrial,Koop.Elk, Mugatua

Mecanizado superficial

MARMITA ELECTRICA

Plano numero
HC - 82952

Sustituye al N°

Sustituido por

Plano hau ez daiteke erabili ez berrizta gure baimenitz gabe

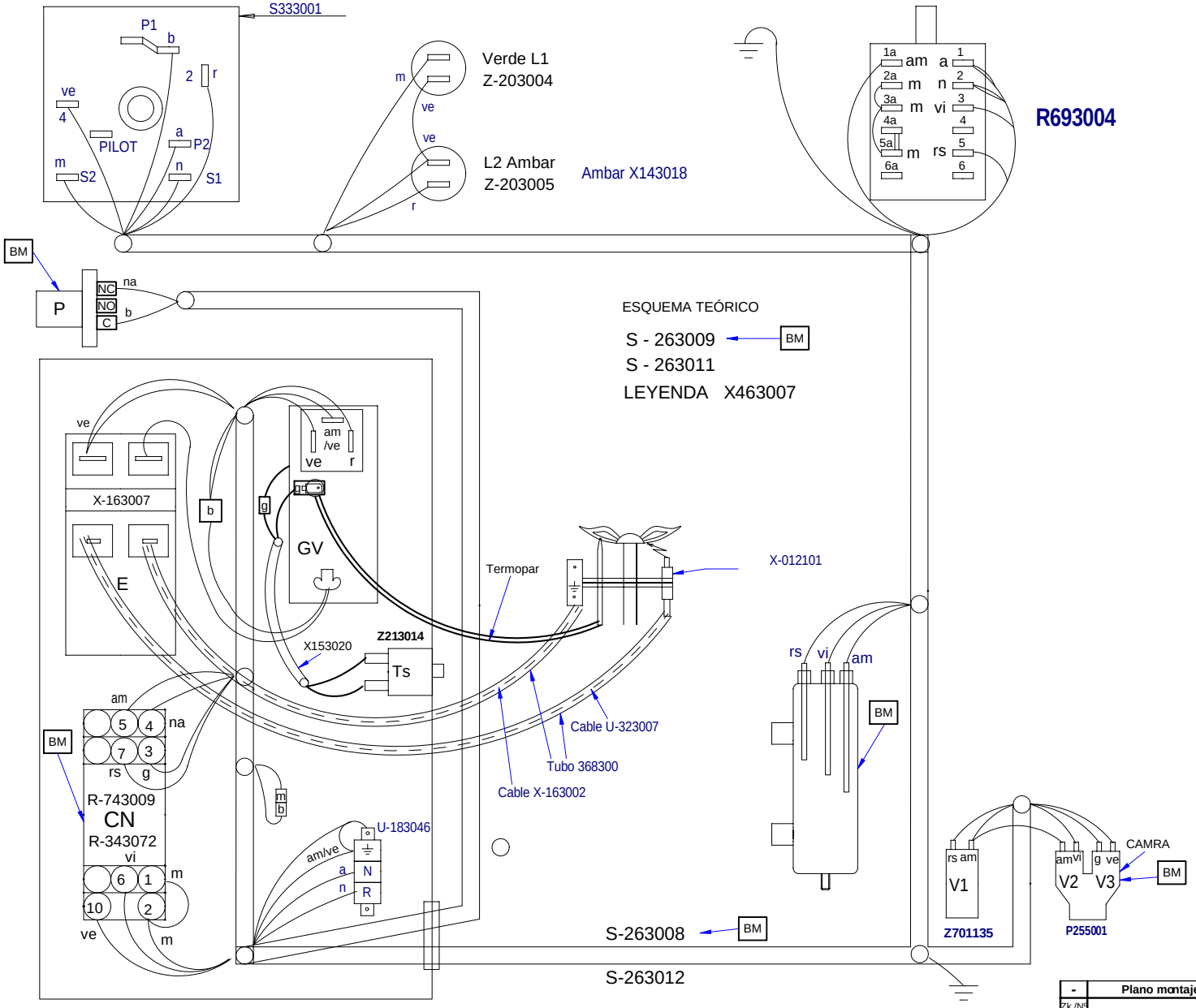

-	Plano montaje MG-910 BM AD	-		S263010000	-
Zk./Nº	Pieza	Cant.	Materiala/Material	Klas. zk/Nº Clas.	Gainazal akabera/Tratamiento
Zk./Nº	Aldaketa/Modificaciones		Nork proposatua/Propuesta de	Data/Fecha	Perdoi orokorrak Tolerancias generales

< 5 ± 0.2 | 50 ÷ 100 ± 0.8
5 ÷ 25 ± 0.4 | >100± 1
25 ÷ 50 ± 0.6 | α ± 1

	Sinadura/Firma	Data/Fecha
Marraztua/Dibujado	M.Maillo	7-07-2010
Proiektatua/Proyectado	M.Maillo	7-07-2010
Egiaztatua/Comprobado	ENERITZ	7-07-2010
Eskala/Escala		

FAGOR
Fagor Industrial,Koop.Elk, Mugatua

Gainazal perdoia
Mecanizado superficial

MARMITA BM

Plano Zk./Plano Nº
HC- 82953

Plano hau ezin daiteke erabili, ez berriztatu, gure baimenik gabe.

- Zk. ord. du
- Zk.gaitik ord.