ARMARIO GASTRONORM DE REFRIGERACIÓN CONCEPT / GASTRONORM CABINET COOLING CONCEPT

CAFP-1602 19029732 / CAFN-1602 19029748 / CAEP-1602 19029775

CAFP-1603 19029735 / CAFN-1603 19029750

CAFP-1604 19029738 / CAFN-1604 19029752

FAGOR

Versión 2014-10

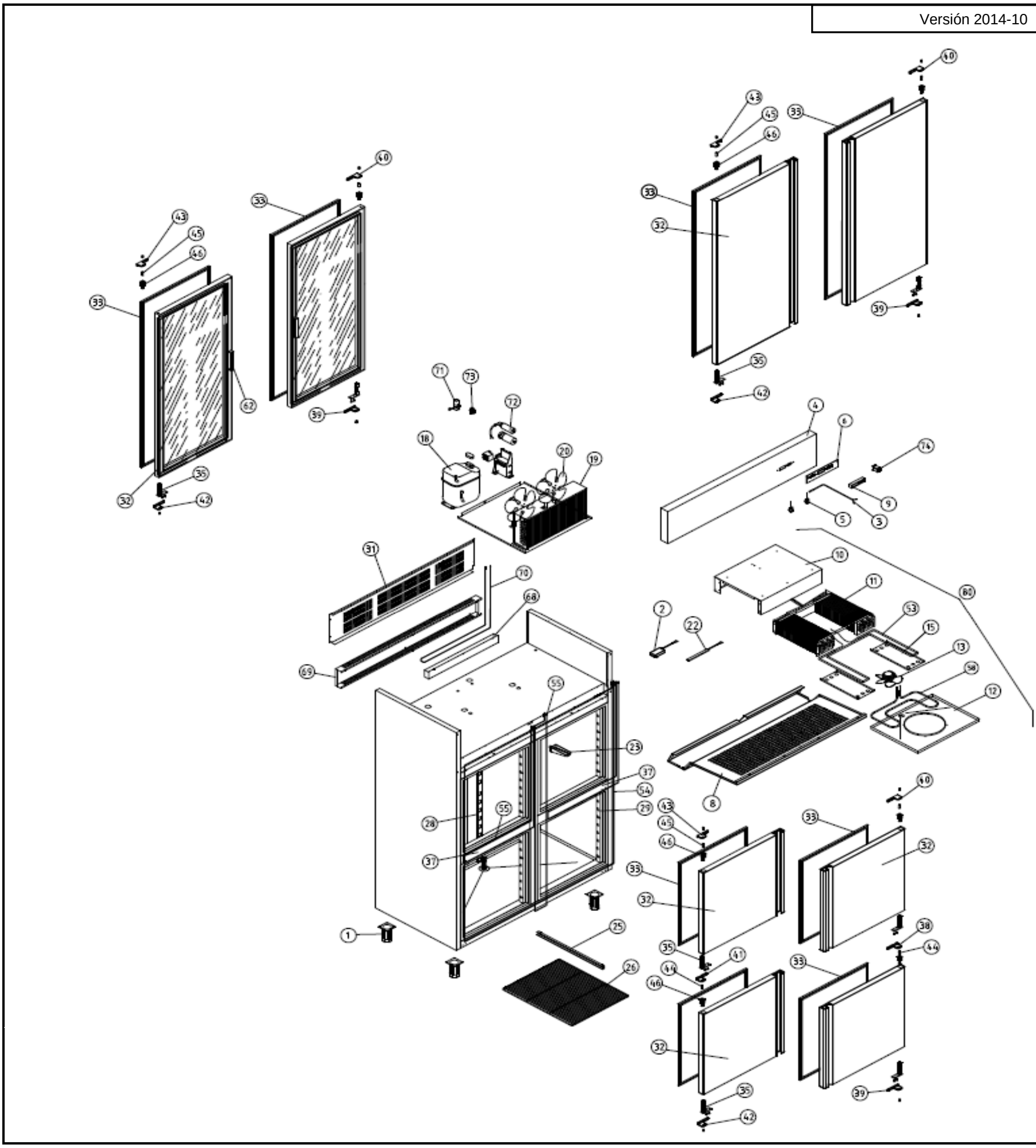

ARMARIO GASTRONORM DE REFRIGERACIÓN CONCEPT / GASTRONORM CABINET COOLING CONCEPT

CAFP-1602/2 19029734

CAFP-1603/2 19029737

CAF-1602 MIX 19029771

FAGOR

Versión 2014-10

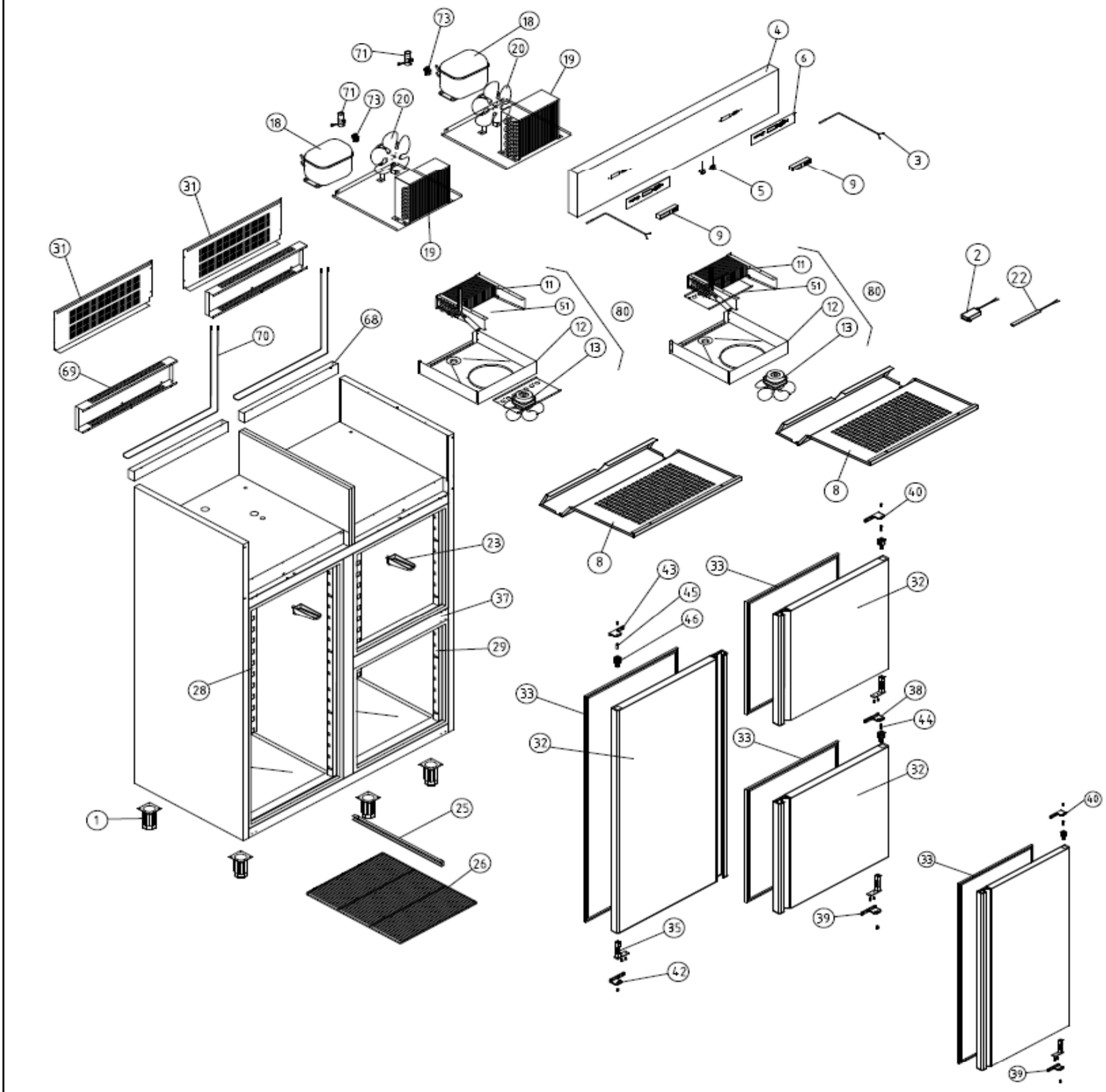

ARMARIO GASTRONORM DE REFRIGERACIÓN CONCEPT / GASTRONORM CABINET COOLING CONCEPT

CAF-1603-P / CAF-1604-P

CAF-1603-C / CAF-1604-C

FAGOR

Versión 2014-10

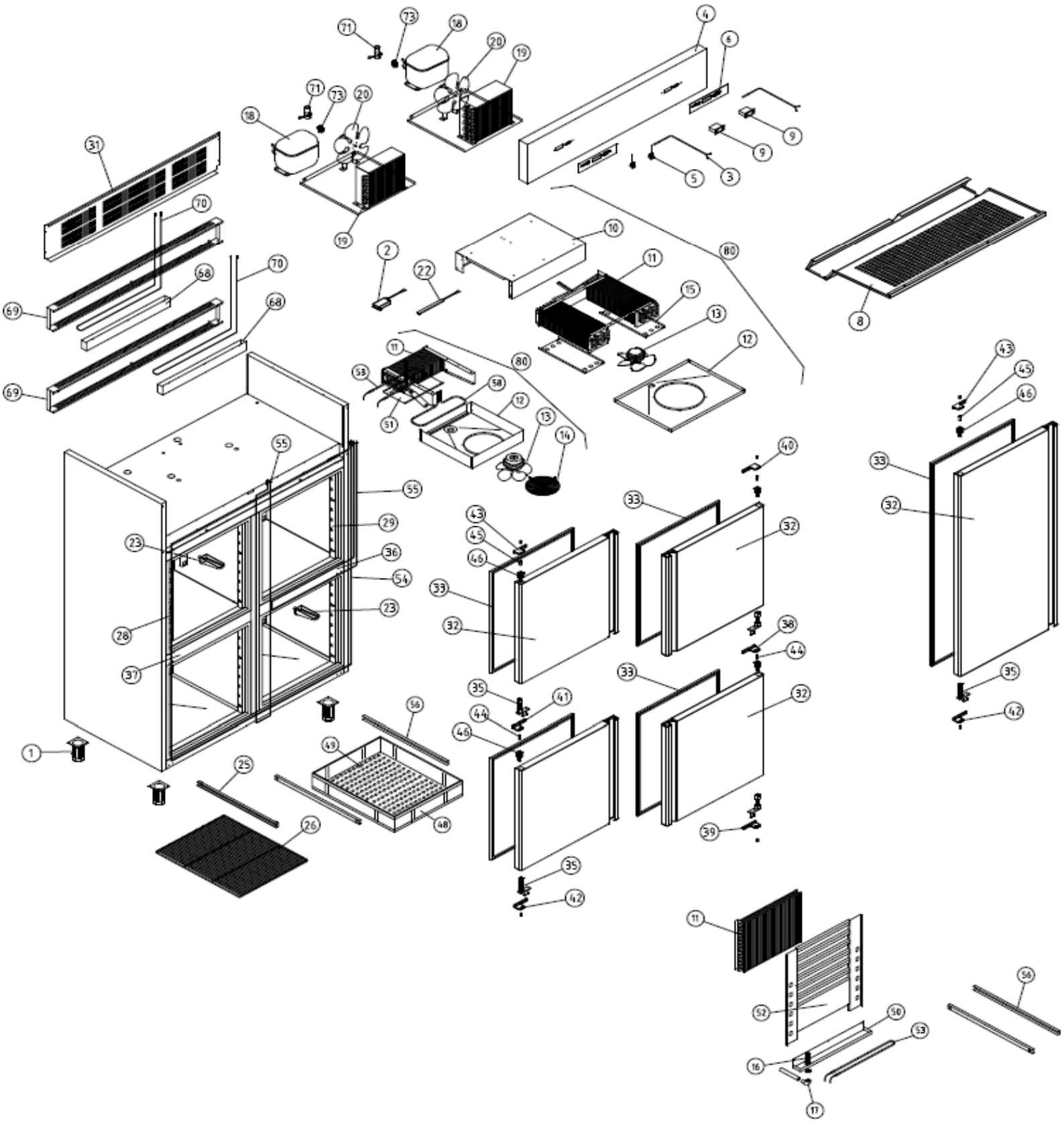

ARMARIO GASTRONORM DE REFRIGERACIÓN CONCEPT / GASTRONORM CABINET COOLING CONCEPT

CAFP-1602 / CAFP-1603 / CAFP-1604

CAEP-1602

CAFN-1602 / CAFN-1603 / CAFN-1604

FAGOR

Versión 2014-10

Nº	CODE CÓDIGO	RECOM.	DESCRIPCIÓN	DESCRIPTION	CAFP-1602	CAFP-1603	CAFP-1604	CAEP-1602	CAFN-1602	CAFN-1603	CAFN-1604
1	12033566		PATA REGULABLE ARM.GASTRO	GASTRO CABINET ADJUSTABLE LEG	4	4	4	4	4	4	4
2	12103609		FUENT APV-16-24 115-230 50/60Hz 24V 16W	APV-16-24 115-230 50/60Hz 24V 16W SOURCE	1	1	1	1			
3	12045530		SONDA NTC 2,5 MTS	THERMOSTAT PROBE	1	1	1	1	2	2	2
4	12116345		CABEZA AFP-1602 FAGOR CONCEPT	HEAD AFP-1602 CONCEPT	1	1	1	1	1	1	1
5	12036888		MICROR.CONMUT.E3111CA	MICROR.CONMUT.E3111CA	2	2	2	2	2	2	2
6	12104752		ADHESIVO G. CONCEPT PWC	PWC CONCEPT RANGE STICKER	1	1	1		1	1	1
8	12116387		TAPA EVAPORADOR ARM. 1600 CONCEPT	EVAPORATOR COVER ARM. 1600 CONCEPT	1	1	1	1	1	1	1
9	12067649		TERMOSTATO POWER COMPAC TROPICAL	TROPICAL POWER COMPACT THERMOSTAT	1	1	1	1			
9	12040693		TERMOSTATO POWER COMPAC CONG.	FREEZER POWER COMPACT THERMOSTAT					1	1	1
10	12074540		TECHO EVAP.MESAS/ARMARIOS	ROOF EVAPAPORADOR TABLES / CABINETS	1	1	1	1	1	1	1
11	12045174		EV. FC71B RH, 7T4R295A6S PINT.	EV. FC71B RH, 7T4R295A6S PINT.	1	1	1	1			
11	12044960		2XBAT.4T6R350A6S PINT.AFN1400	2XBAT.4T6R350A6S PINT.AFN1400					1	1	1
11	12070041		TAPA EVAPORADOR ARMARIOS	EVAPORATOR COVER CABINETS	1	1	1	1			
12	12047175		SUJ.VENT.AFP-1400,1600 COMPACT	SUJ.VENT.AFP-1400,1600 COMPACT					1	1	1
13	12047387		VENT.EVAP.10W S/ARO S/PATAS	VENT.EVAP.10W S/ARO S/PATAS					1	1	1
13	12034545		VENTIL.EVAPOR.5W S/ARO S/PATAS	VENTIL.EVAPOR.5W S/ARO S/PATAS	1	1	1	1			
15	12070033		CUBRER.2BAT4T6R350A 6S AFN1400	CUBRER.2BAT4T6R350A 6S AFN1400					2	2	2
18	12026066		COMPR.J2212GK 220V50Hz ASPERA	COMPR.J2212GK 220V50Hz ASPERA					1	1	1
18	12046754		COMP.NEK6210Z EMBRACO	COMP.NEK6210Z EMBRACO	1	1	1	1			
19	12030459		CONDENSADOR DOBLE 9X3 DCHA-TEC	CONDENSADOR DOBLE 9X3 DCHA-TEC					1	1	1
19	12032340		CONDENSADOR 9x3	CONDENSADOR 9x3	1	1	1	1			
20	12033477		VENTILADOR 10W PATA PALA 220V	FAN 10W PATA PALA 220V	1	1	1	1	2	2	2
22	12117149		TIRA LED T3-270-3014-868.16-CW24V DC 2mt	LED T3-270-3014-868.16-CW24V DC 2mt	2	2	2	2			
23	12037375		CANALIZADOR AGUA 150 GRIS REFRIGERACION	REFRIGERATION GREY 150 WATER DRAINAGE	1	1	1	1			
23	12037314		CANALIZADOR AGUA 150 NEGRO MANT.CONGEL.	FREEZER BLACK 150 WATER DRAINAGE					1	1	1
25	12037948		GUIA GN 2/1 U 662 mm	GUIDE GN L=662 mm	12	12	12	12	12	12	12
26	12037958		PARRILLA GN 2/1 650X530	GRILL GN 2/1 650x530	6	6	6	6	6	6	6
28	12034805		CREMALL.INT.AFP-GN	CREMALL.INT.AFP-GN	4	4	4	4	4	4	4
29	12035486		CREM.DEL.PEQ.AFP-GN DCHA.	CREM.DEL.PEQ.AFP-GN DCHA.		4	8			4	8
29	12034237		CREMALL.DELANT.AFP-GN	CREMALL.DELANT.AFP-GN	4	2		4	4	2	
31	12035768		REJILLA RESP.MOTOR AFP1600	GRID ENGINE 1600	1	1	1	1	1	1	1
32	12083604		PUE PEQ AFP CONCEPT IZD	PUE PEQ AFP CONCEPT IZD			2				2
32	12049573		PUE PEQ AFP/AFN CONCEPT DCHA	PUE PEQ AFP CONCEPT DCH		2	2			2	2
32	12083602		PUE CARN AFP/AFN CONCEPT IZD	PUE CARN AFP/AFN CONCEPT IZD	1	1			1	1	
32	12083603		PUE CARN AFP/AFN CONCEPT DCHA	PUE CARN AFP/AFN CONCEPT DCH	1				1		
32	12045918		PUERTA CRISTAL ARM. CARNICERA	GLASS DOOR ARM. BUTCHER				2			
33	12038148		BURLETE PUERTA CARNICER ARM.	GASKET DOOR CABINET BUTCHER	2	1		2	2	1	
33	12038144		BURLETE PUERTA PEQUEÑA ARM.	SMALL DOOR GASKET. WARDROBE		2	4		2	2	4
35	12038130		BIS.TRS1D DOBL MUELLE DV-2608	DOUBLE SPRING HINGE TRS1D DV-2608	2	3	4	2		3	4
37	12083394		FRONTI HORZ.POST.AFP MAGNETICO	MAGNETIC HORZ.POST.AFP FRONTI		1	2			1	2
38	12037088		SOP.BISAG.DV2606 INF DCH. FRES	INF SOP.BISAG.DV2606 DCH. FRES		1	1			1	1
39	12037017		SOP.BISAG.INF.DCH.	SOP.BISAG.INF.DCH.	1	1	1	1	1	1	1
40	12041472		SOP.BISAG. SUP. DCH	SOP.BISAG.SUP.DCH	1	1	1	1	1	1	1
41	12036776		SOP.BISAG.DV2607 INF IZQ. FRES	INF SOP.BISAG LEFT. FRES			1				1
42	12036986		SOP.BISAG.INF.IZD.	LEFT LOW HINGE SUPPORT	1	1	1	1	1	1	1
43	12041474		SOPORTE SUPERIOR BISAGRA IZQUIERDO	LEFT TOP HINGE SUPPORT	1	1	1	1	1	1	1
44	12037138		EJE ROSCA EXT.30X10INOX	THREADED SHAFT EXT.30X10INOX		1	2			1	2
45	12038076		EJE30x10VARIL INOX ROSC.INT M6	SUP HUB. 30x10 ROD DOORS INOX.INT. M-6	2	2	2	2	2	2	2
46	12037723		CAJA ALOJAMIENTO MUELLE GRIS	GREY SPRING HOUSING BOX	2	3	4	2	2	3	4
53	12047326		RESIST.R41 1050W CABLE 1500mm	RESIST.R41 1050W CABLE 1500mm					1	1	1
54	12035540		RESIST.MARCO EXT.1400/1600 57W	RESIST.MARCO EXT.1400/1600 57W					1	1	1
55	12036191		RESIST.FRONTI V.1400-1600 31W	RESIST.FRONTI V.1400-1600 31W					1	1	1
55	12036316		RESIST.FRONTI H.1400-1600 12W	RESIST.FRONTI H.1400-1600 12W						1	2
58	12036313		RESIST.BANDEJA 700-20W	RESIST.BANDEJA 700-20W					1	1	1
62	12068289		TIRAD. PT. CRISTAL	GLASS DOOR HANDLE				2			
68	12034715		BAND.EVAP.AUT.AFP-GN	BAND.EVAP.AUT.AFP-GN	1	1	1	1	1	1	1
69	12069837		TAPA BAN.EVAP.AUT.AFP1600	TRAY COVER EVAP. AUTO. AFP.1600	1	1	1	1	1	1	1
70	12038150		RESIST.EVAP.AUT.80W 3MT	RESIST.EVAP.AUT.80W 3MT	1	1	1	1	1	1	1
71	12040120		CONDENSADOR COMP. NEK 6210Z	CONDENSADOR COMP. NEK 6210Z	1	1	1	1			
72	12049723		BLOQUE ARRANQUE J2212GK 50HZ	BLOQUE ARRANQUE J2212GK 50HZ					1	1	1
73	12036939		RELE ARRAN. COMP. NEK 6210Z	RELAY ARRAN. COMP. NEK 6210Z	1	1	1	1			
74	12033148		RELÉ 25A	RELAY 25A					1	1	1
80	12116386		UD.EV.ARM.GASTRO 2C REF.	EVAPORATOR UNIT ARM. 2C REF.	1	1	1	1			
80	12118655		UD.EV. AFN-1600 COMPACT	EVAPORATOR UNIT AFN-1600 COMPACT					1	1	1

ARMARIO GASTRONORM DE REFRIGERACIÓN CONCEPT / GASTRONORM CABINET COOLING CONCEPT

CAFP-1602/2 / CAFP-1603/2

CAF-1602 MIX

FAGOR

Versión 2014-10

Nº	CODE CÓDIGO	RECOM.	DESCRIPCIÓN	DESCRIPTION	CAFP-1602/2	CAFP-1603/2	CAF-1602 MIX
1	12033566		PATA REGULABLE ARM.GASTRO	GASTRO CABINET ADJUSTABLE LEG	6	6	6
2	12103609		FUENT APV-16-24 115-230 50/60Hz 24V 16W	APV-16-24 115-230 50/60Hz 24V 16W SOURCE	1	1	
3	12045530		SONDA NTC 2,5 MTS	THERMOSTAT PROBE	2	2	3
4	12116348		CABEZA AF-1600 C/P FAGOR CONCEPT	HEAD AF-1600 C/P CONCEPT	1	1	1
5	12036888		MICROR.CONMUT.E3111CA	MICROR.CONMUT.E3111CA	2	2	2
6	12104752		ADHESIVO G. CONCEPT PWC	PWC CONCEPT RANGE STICKER	2	2	2
8	12116300		TAPA EVAPORADOR ARM. 800 CONCEPT	EVAPORATOR COVER ARM. 800 CONCEPT	2	2	2
9	12067649		TERMOSTATO POWER COMPAC TROPICAL	TROPICAL POWER COMPACT THERMOSTAT	2	2	1
9	12040693		TERMOSTATO POWER COMPAC CONG.	FREEZER POWER COMPACT THERMOSTAT			1
11	12031794		BAT.6T4R300A4S PINTADO.ARMARIO	BAT.6T4R300A4S PINTADO.ARMARIO	2	2	1
11	12048802		BAT.6T4R 300A 6S. 2 CIRCUITOS	BAT. 6T 4R 300A 6S 2 CIRCUITO			1
12	12070030		SUJ.VENT.AFP-700,800 COMPACTO	SUJ.VENT.AFP-700,800 COMPACTO	2	2	2
13	12034545		VENTIL.EVAPOR.5W S/ARO S/PATAS	VENTIL.EVAPOR.5W S/ARO S/PATAS	2	2	2
18	12028976		COMPRES.FR-8.5-G R134A	COMPRES.FR-8.5-G R134A	2	2	1
18	12027322		COMPR.SC-15-CL R404A	COMPR.SC-15-CL R404A			1
19	12032903		CONDENSADOR 9X2	CONDENSADOR 9X2	2	2	1
19	12050285		CONDENSADOR VENTILADO 100	CONDENSADOR VENTILADO 100			1
20	12033477		VENTILADOR 10W PATA PALA 220V	FAN 10W PATA PALA 220V	2	2	1
22	12117149		TIRA LED T3-270-3014-868.16-CW24V DC 2mt	LED T3-270-3014-868.16-CW24V DC 2mt	2	2	
23	12037375		CANALIZADOR AGUA 150 GRIS REFRIGERACION	REFRIGERATION GREY 150 WATER DRAINAGE	2	2	
23	12037314		CANALIZADOR AGUA 150 NEGRO MANT.CONGEL.	FREEZER BLACK 150 WATER DRAINAGE			2
25	12037948		GUIA GN 2/1 U 662 mm	GUIDE GN L=662 mm	12	12	12
26	12037958		PARRILLA GN 2/1 650X530	GRILL GN 2/1 650x530	6	6	6
28	12034805		CREMALL.INT.AFP-GN	CREMALL.INT.AFP-GN	4	4	4
29	12035486		CREM.DEL.PEQ.AFP-GN DCHA.	CREM.DEL.PEQ.AFP-GN DCHA.		4	
29	12034237		CREMALL.DELANT.AFP-GN	CREMALL.DELANT.AFP-GN	4	2	4
31	12036589		REJILLA RESP.MOTOR AFP 800	GRID ENGINE 800	2	2	2
32	12049573		PUE PEQ AFP/AFN CONCEPT DCHA	PUE PEQ AFP CONCEPT DCH		2	
32	12083602		PUE CARN AFP/AFN CONCEPT IZD	PUE CARN AFP/AFN CONCEPT IZD	1	1	1
32	12083603		PUE CARN AFP/AFN CONCEPT DCHA	PUE CARN AFP/AFN CONCEPT DCH	1		1
33	12038148		BURLETE PUERTA CARNICER ARM.	GASKET DOOR CABINET BUTCHER	2	1	2
33	12038144		BURLETE PUERTA PEQUEÑA ARM.	SMALL DOOR GASKET. WARDROBE		2	
35	12038130		BIS.TRS1D DOBL MUELLE DV-2608	DOUBLE SPRING HINGE TRS1D DV-2608	2	3	2
37	12083394		FRONTI HORZ.POST.AFP MAGNETICO	MAGNETIC HORZ.POST.AFP FRONTI		1	
38	12037088		SOP.BISAG.DV2606 INF DCH. FRES	INF SOP.BISAG.DV2606 DCH. FRES		1	
39	12037017		SOP.BISAG.INF.DCH.	SOP.BISAG.INF.DCH.	1	1	1
40	12041472		SOP.BISAG. SUP. DCH	SOP.BISAG.SUP.DCH	1	1	1
42	12036986		SOP.BISAG.INF.IZD.	LEFT LOW HINGE SUPPORT	1	1	1
43	12041474		SOPORTE SUPERIOR BISAGRA IZQUIERDO	LEFT TOP HINGE SUPPORT	1	1	1
44	12037138		EJE ROSCA EXT.30X10INOX	THREADED SHAFT EXT.30X10INOX		1	
45	12038076		EJE30x10VARIL INOX ROSC.INT M6	SUP HUB. 30x10 ROD DOORS INOX.INT. M-6	2	2	2
46	12037723		CAJA ALOJAMIENTO MUELLE GRIS	GREY SPRING HOUSING BOX	2	3	2
51	12044961		CUBRER.EVAP.FC61B ARM.COMPACTO	CUBRER.EVAP.FC61B ARM.COMPACTO	2	2	2
53	12034637		RESIST.BLIND.FC61-71 350W	RESIST.R17 350W CABLE1MT.			1
55	12036014		RESIST. MARCO EXTERIOR 700/800 43w	RESIST.MARCO EXT.700/800 43W			1
58	12036313		RESIST.BANDEJA 700-20W	RESIST.BANDEJA 700-20W			1
68	12034715		BAND.EVAP.AUT.AFP-GN	BAND.EVAP.AUT.AFP-GN	2	2	2
69	12036513		TAPA BAN. EVAP.AUT. AFP800	TRAY COVER EVAP. AUTO. AFP.800	2	2	2
70	12038150		RESIST.EVAP.AUT.80W 3MT	RESIST.EVAP.AUT.80W 3MT	2	2	2
71	12018649		CONDEN.ARRANQUE SC-117U5017 80 mF	CONDEN.ARRANQUE SC-117U5017 80 mF			1
71	12033454		CONDEN.ARRANQUE FR-117U5015 80 mF	CONDEN.ARRANQUE FR-117U5015 80 mF	2	2	1
73	12034983		RELE ARRANQUE COMPRESOR SC-15CL 60	RELAY ARRANQ COMPR.SC-15CL 6019			1
73	12034947		RELE ARRANQUE COMPRESOR FR-8,5G 2	RELAY ARRANQUE COMPRESOR FR-8,5G 2	2	2	1
80	12116301		UD.EV. AFP-800	EVAPORATOR UNIT AFP-800	2	2	1
81	12083693		UD.EVAP.NEGATIVA 1 C	EVAPORATOR UNIT FREEZER 1C			1

ARMARIO GASTRONORM DE REFRIGERACIÓN CONCEPT / GASTRONORM CABINET COOLING CONCEPT

CAF-1603-P / CAF-1604-P

CAF-1603-C / CAF-1604-C

FAGOR

Versión 2014-10

Nº	CODE CÓDIGO	RECOM.	DESCRIPCIÓN	DESCRIPTION	CAF-1603-P	CAF-1604-P	CAF-1603-C	CAF-1604-C
1	12033566		PATA REGULABLE ARM.GASTRO	GASTRO CABINET ADJUSTABLE LEG	4	4	4	4
2	12103609		FUENT APV-16-24 115-230 50/60Hz 24V 16W	APV-16-24 115-230 50/60Hz 24V 16W SOURCE	1	1	1	1
3	12045530		SONDA NTC 2,5 MTS	THERMOSTAT PROBE	2	2	3	3
4	12116348		CABEZA AF-1600 C/P FAGOR CONCEPT	HEAD AF-1600 C/P CONCEPT	1	1	1	1
5	12036888		MICROR.CONMUT.E3111CA	MICROR.CONMUT.E3111CA	2	2	2	2
6	12104752		ADHESIVO G. CONCEPT PWC	PWC CONCEPT RANGE STICKER	2	2	2	2
8	12116387		TAPA EVAPORADOR ARM. 1600 CONCEPT	EVAPORATOR COVER ARM. 1600 CONCEPT	1	1	1	1
9	12067649		TERMOSTATO POWER COMPAC TROPICAL	TROPICAL POWER COMPACT THERMOSTAT	1	1	1	1
9	12040693		TERMOSTATO POWER COMPAC CONG.	FREEZER POWER COMPACT THERMOSTAT	1	1	1	1
10	12074540		TECHO EVAP.MESAS/ARMARIOS	ROOF EVAPAPORADOR TABLES / CABINETS	1	1	1	1
11	12030935		EV.B14T2R426A6S DPTO.PESC PIN.	EV.B14T2R426A6S DPTO.PESC PIN.	1	1		
11	12045174		EV. FC71B RH, 7T4R295A6S PINT.	EV. FC71B RH, 7T4R295A6S PINT.	1	1	1	1
11	12046898		BAT.6T4R 300A 6S.PINT.ARMARIOS	BAT.6T4R 300A 6S.PINT.ARMARIOS			1	1
11	12070041		TAPA EVAPORADOR ARMARIOS	EVAPORATOR COVER CABINETS	1	1	1	1
12	12070030		SUJ.VENT.AFP-700,800 COMPACTO	SUJ.VENT.AFP-700,800 COMPACTO			1	1
13	12034545		VENTIL.EVAPOR.5W S/ARO S/PATAS	VENTIL.EVAPOR.5W S/ARO S/PATAS	1	1	2	2
14	12034663		REJILLA VENT.D.246 PINTADA	D.246 PAINTED GRILLE VENTENTILADOR			1	1
16	12037617		DESAGÜE 1/2 PULG. CUELLO CORTO	1/2 INCH DRAIN. SHORT NECK	1	1		
17	12037541		CODO PVC MIXTO 90º 20x1/2	PVC ELBOW JOINT 90 20x1 / 2	1	1		
18	12046754		COMP.NEK6210Z EMBRACO	COMP.NEK6210Z EMBRACO	1	1	1	1
18	12059107		COMPR.TL-5-G R134A	COMPR.TL-5-G R134A	1	1		
18	12028143		COMPR.SC-12-CL R404A	COMPR.SC-12-CL R404A			1	1
19	12032340		CONDENSADOR 9x3	CONDENSADOR 9x3	1	1	1	1
19	12033007		CONDENSADOR 8X2	CONDENSADOR 8X2	1	1		
19	12031310		CONDENSADOR 10x4 TECHO	CONDENSADOR 10x4 TECHO			1	1
20	12033477		VENTILADOR 10W PATA PALA 220V	FAN 10W PATA PALA 220V	1	1	2	2
20	12059041		VENT 5W H72 200 28º 0.5m VS	FAN 5W H72 200 28º 0,5 mt	1	1		
22	12117149		TIRA LED T3-270-3014-868.16-CW24V DC 2mt	LED T3-270-3014-868.16-CW24V DC 2mt	2	2	2	2
23	12037375		CANALIZADOR AGUA 150 GRIS REFRIGERACION	REFRIGERATION GREY 150 WATER DRAINAGE	1	1	1	1
23	12037314		CANALIZADOR AGUA 150 NEGRO MANT.CONGEL.	FREEZER BLACK 150 WATER DRAINAGE			1	1
25	12037948		GUIA GN 2/1 U 662 mm	GUIDE GN L=662 mm	8	8	14	14
26	12037958		PARRILLA GN 2/1 650X530	GRILL GN 2/1 650x530	4	4	4	4
28	12036498		CREMALL.INT.DPTO.AF-702-C	CREMALL.INT.DPTO.AF-702-C	2	2	4	4
28	12034805		CREMALL.INT.AFP-GN	CREMALL.INT.AFP-GN	2	2	2	2
29	12035486		CREM.DEL.PEQ.AFP-GN DCHA.	CREM.DEL.PEQ.AFP-GN DCHA.	4	8	4	8
29	12034237		CREMALL.DELANT.AFP-GN	CREMALL.DELANT.AFP-GN	2		2	
31	12035768		REJILLA RESP.MOTOR AFP1600	GRID ENGINE 1600	1	1	1	1
32	12083604		PUE PEQ AFP CONCEPT IZD	PUE PEQ AFP CONCEPT IZD		2		2
32	12049573		PUE PEQ AFP/AFN CONCEPT DCHA	PUE PEQ AFP CONCEPT DCH	2	2	2	2
32	12083602		PUE CARN AFP/AFN CONCEPT IZD	PUE CARN AFP/AFN CONCEPT IZD	1		1	
33	12038148		BURLETE PUERTA CARNICER ARM.	GASKET DOOR CABINET BUTCHER	1		1	
33	12038144		BURLETE PUERTA PEQUEÑA ARM.	SMALL DOOR GASKET. WARDROBE	2	4	2	4
35	12038130		BIS.TRS1D DOBL MUELLE DV-2608	DOUBLE SPRING HINGE TRS1D DV-2608	3	4	3	4
36	12083396		FRONTI HOR.POST.AF-700,800-C/P	MAGNETIC HORZ.POST.AFP-700,800-C/P	1	1	1	1
37	12083394		FRONTI HORZ.POST.AFP MAGNETICO	MAGNETIC HORZ.POST.AFP FRONTI		1		1
38	12037088		SOP.BISAG.DV2606 INF DCH. FRES	INF SOP.BISAG.DV2606 DCH. FRES	1	1	1	1
39	12037017		SOP.BISAG.INF.DCH.	SOP.BISAG.INF.DCH.	1	1	1	1
40	12041472		SOP.BISAG. SUP. DCH	SOP.BISAG.SUP.DCH	1	1	1	1
41	12036776		SOP.BISAG.DV2607 INF IZQ. FRES	INF SOP.BISAG LEFT. FRES		1		1
42	12036986		SOP.BISAG.INF.IZD.	LEFT LOW HINGE SUPPORT	1	1	1	1
43	12041474		SOPORTE SUPERIOR BISAGRA IZQUIERDO	LEFT TOP HINGE SUPPORT	1	1	1	1
44	12037138		EJE ROSCA EXT.30X10INOX	THREADED SHAFT EXT.30X10INOX	1	2	1	2
45	12038076		EJE30x10VARIL INOX ROSC.INT M6	SUP HUB. 30x10 ROD DOORS INOX.INT. M-6	2	2	2	2
46	12037723		CAJA ALOJAMIENTO MUELLE GRIS	GREY SPRING HOUSING BOX	3	4	3	4
48	12033784		CUBETA DPTO CONGEL.530X540	TRAY DEPT CONGEL.530X540	3	3	3	3
49	12034707		FOND. PERF. 530x540x100	BACKGROUND 530x540x100 PUNCHED	3	3		
50	12035779		BANDEJA GOTEO DPTO.PESCADO	DRIP TRAY DPTO. FISH	1	1		
51	12044961		CUBRER.EVAP.FC61B ARM.COMPACTO	CUBRER.EVAP.FC61B ARM.COMPACTO			1	1
52	12069490		DUELAS DPTO.PESC.1600	SLAT DPTO. PESC. 1600	1	1		
53	12033255		RESIST.DESES.DEP.PESC.220V425W	RESIST.DESES.DEP.PESC.220V425W	1	1		
53	12033938		RESIST.BLIND.FC61-71 350W 2500	RESIST.R17 350W CABLE 2,5 MT.			1	1
54	12035540		RESIST.MARCO EXT.1400/1600 57W	RESIST.MARCO EXT.1400/1600 57W			1	1
55	12036191		RESIST.FRONTI V.1400-1600 31W	RESIST.FRONTI V.1400-1600 31W			1	1
55	12036316		RESIST.FRONTI H.1400-1600 12W	RESIST.FRONTI H.1400-1600 12W			1	1
56	12036716		GUIA BAJ GN CENT L=613MM Y PES	GUIDE GN L=613 mm	6	6		
58	12035911		RESIST.BANDEJA DEPART.18W	RESIST.BANDEJA DPTO 18W			1	1
68	12034715		BAND.EVAP.AUT.AFP-GN	BAND.EVAP.AUT.AFP-GN	1	1	2	2
69	12069837		TAPA BAN.EVAP.AUT.AFP1600	TRAY COVER EVAP. AUTO. AFP.1600	1	1	2	2
70	12038150		RESIST.EVAP.AUT.80W 3MT	RESIST.EVAP.AUT.80W 3MT	1	1	1	1
70	12041467		RESIST.EVAP.AUT.80W 4MT	RESIST.EVAP.AUT.80W 4MT			1	1
71	12018649		CONDEN.ARRANQUE SC-117U5017 80 mF	CONDEN.ARRANQUE SC-117U5017 80 mF			1	1
71	12033999		CONDEN.ARRANQUE TL-G 17U5014 60 mF	CONDEN.ARRANQUE TL-G 17U5014 60 mF	1	1	1	1
71	12040120		CONDENSADOR COMP. NEK 6210Z	CONDENSADOR COMP. NEK 6210Z	1	1	1	1
73	12034981		RELE ARRANQUE COMPRESOR TL-5G 6000	RELAY ARRANQUE COMPRESOR TL-5G 6000	1	1		
73	12036939		RELE ARRAN. COMP. NEK 6210Z	RELAY ARRAN. COMP. NEK 6210Z	1	1	1	1
80	12116386		UD.EV.ARM.GASTRO 2C REF.	EVAPORATOR UNIT ARM. 2C REF.	1	1	1	1
81	12083678		UD.EVAP.AF-802-C,1602-C	EVAPORATOR UNIT AF-802-C, 1602-C			1	1