Mod./Type:	_70/... FT...GS... - _90/... FT...GS...	cod./num.	2531675.00
	SIMPLE	data/date:	16/06/2014

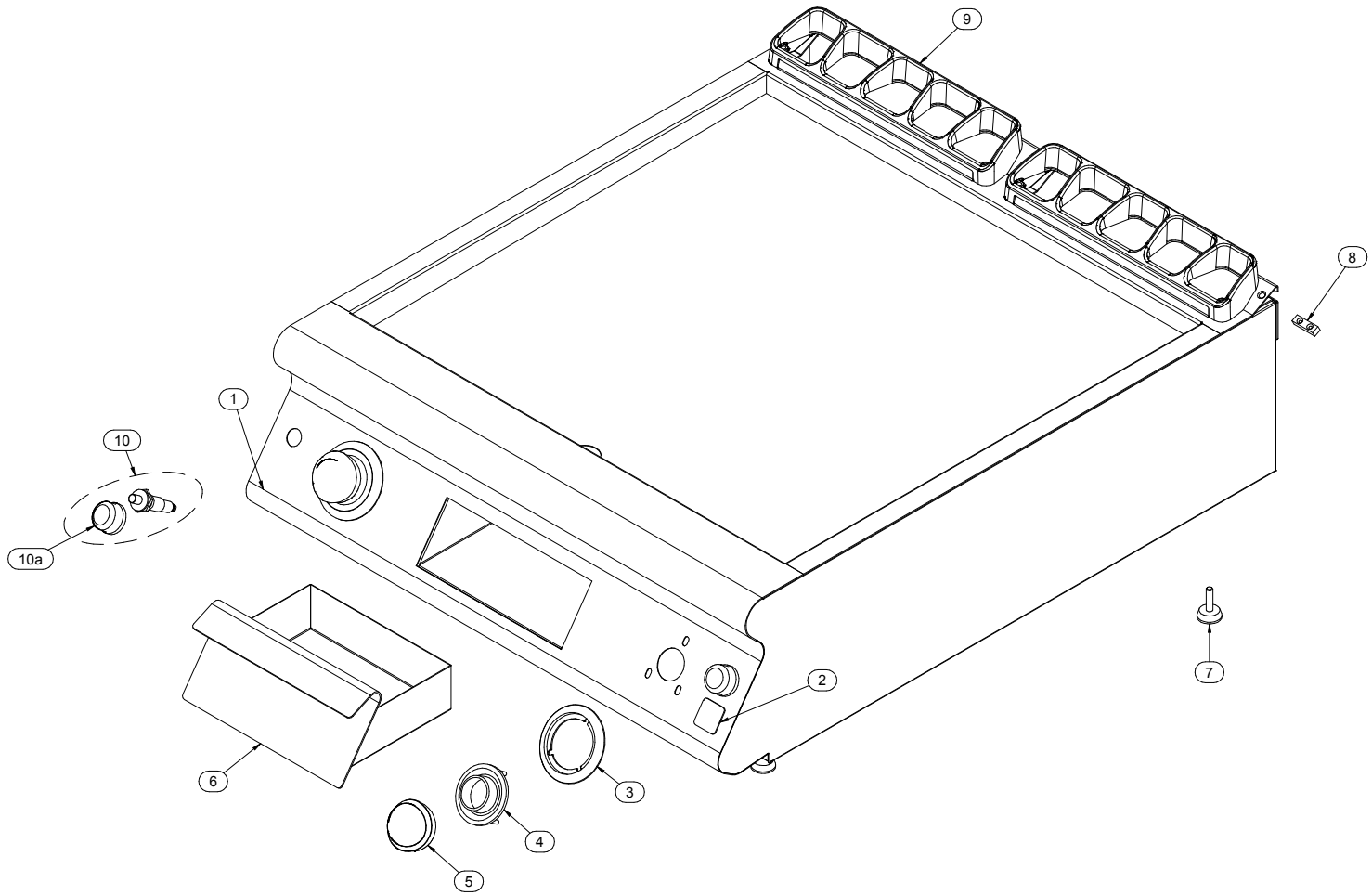

Mod./Type: **_70/... FT...G... - _90/... FT...G...**

EXTREME

cod./num. 2531681.00

data/date: 16/06/2014

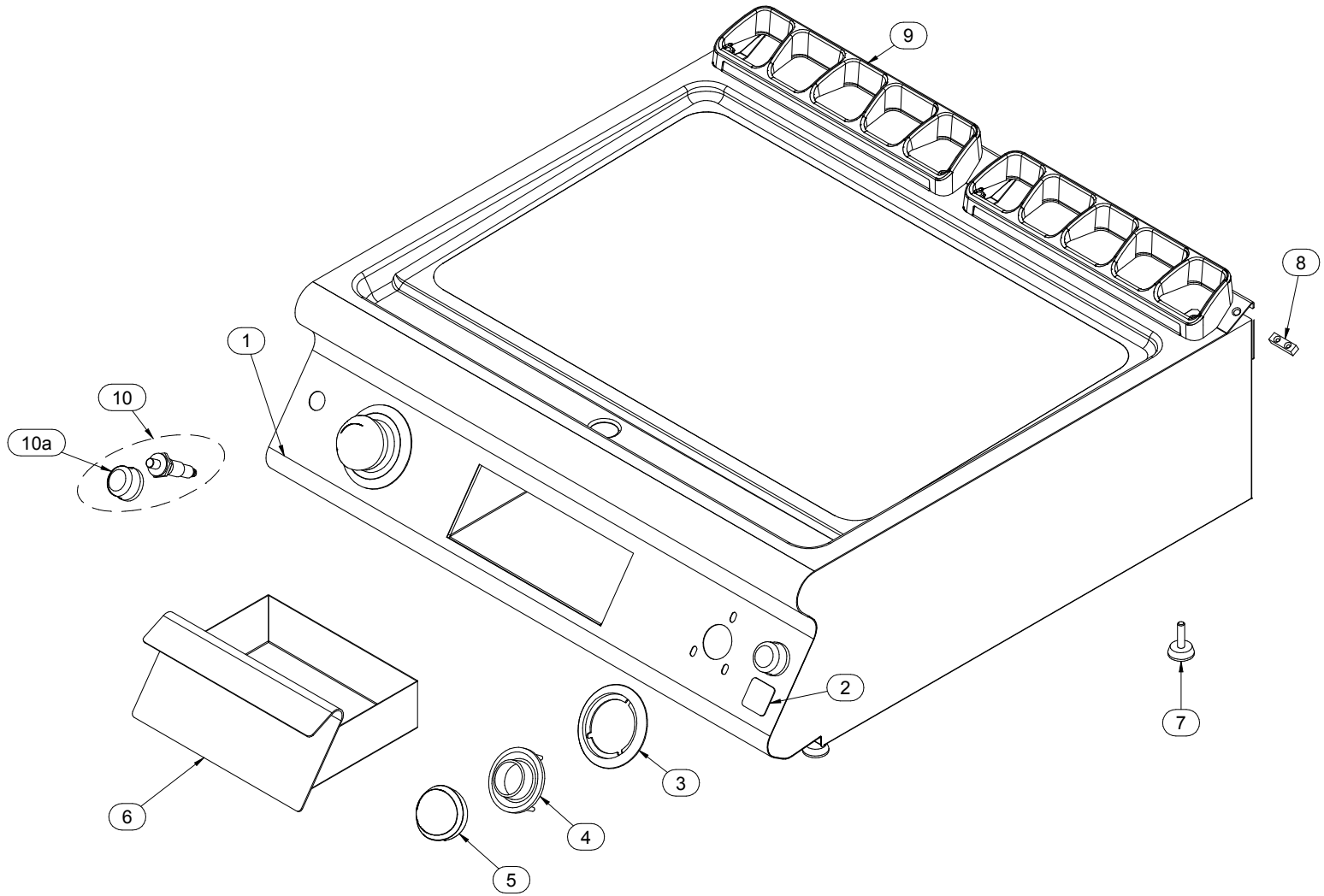

Mod./Type:	_70/... - 90/... FT...GS... SIMPLE _70/... - 90/... FT...G... EXTREME	cod./num.	2531677.00
		data/date:	16/06/2014

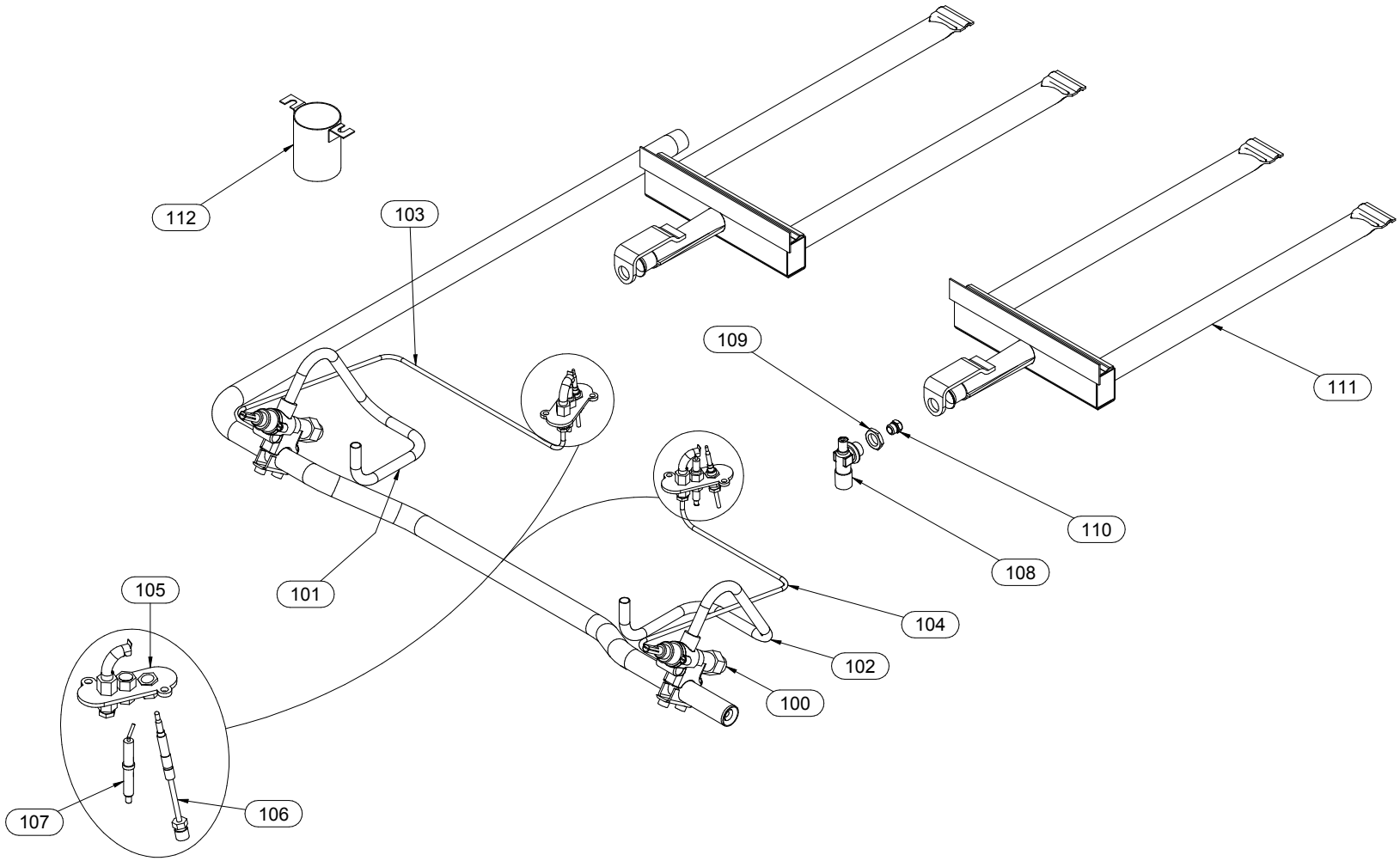

Mod./Type:	_70/... - _90/... FT...GS-CR... / ...-TR... SIMPLE _90/... FT...G-CR / ...-TR... EXTREME	cod./num.	2531683.00
		data/date:	16/06/2014

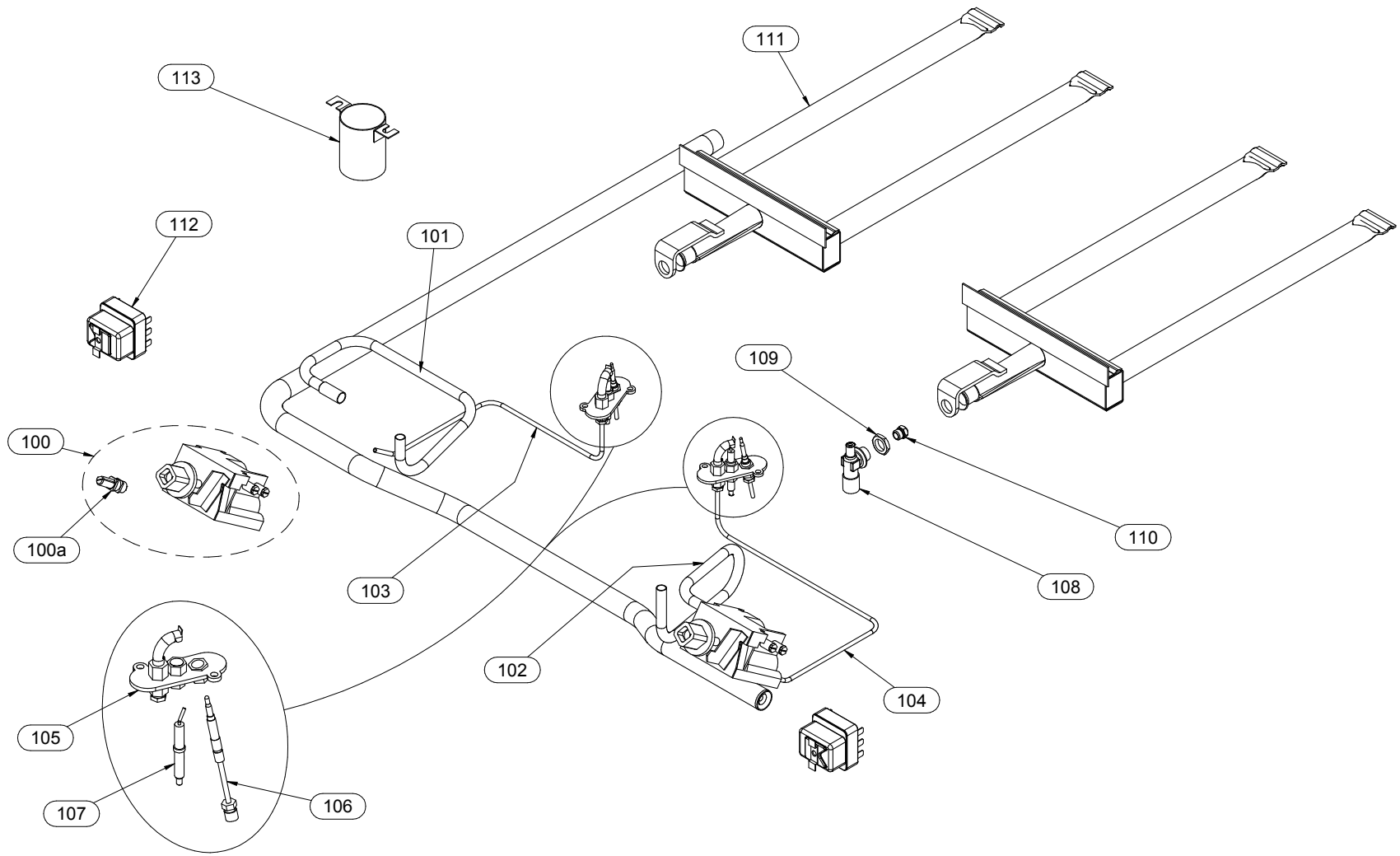

Mod./Type: **_70 - _90 .../40 ... - .../80 ... - .../120 ...**

VANO / CABINET - ...B - ...BE - ...BH2

cod./num. 2531578.00

data/date: 05/06/2014

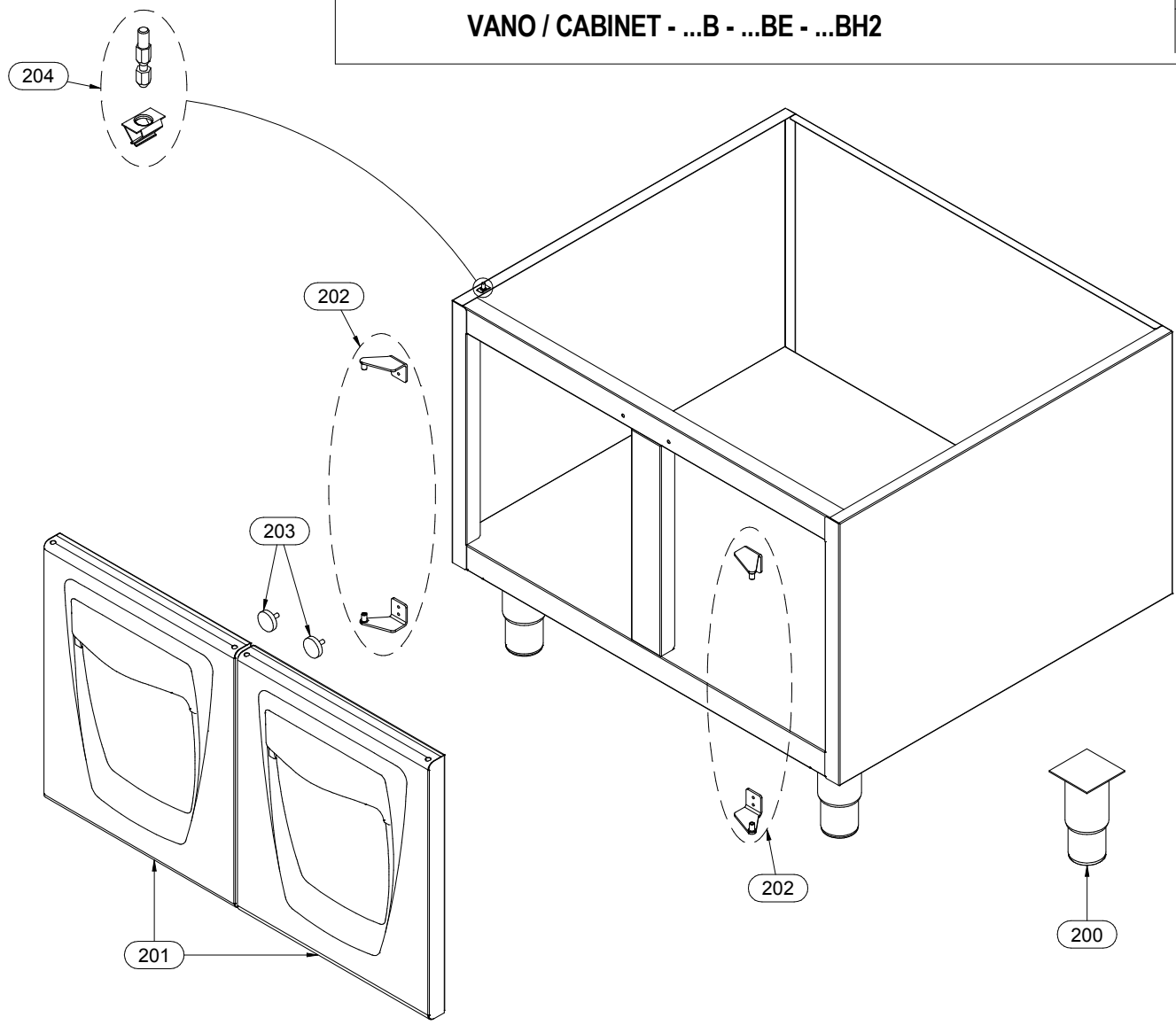

Mod.:	_70/... FT…GS… - _90/... FT…GS… SIMPLE			cod. / num. 2531676.00 data / date 16/06/2014 rif. / ref. 2531675.00		RICAMBI CONSIGLIATI - RECOMMENDED SPARE PARTS - PIECES DETACHEES RECOMMANDEES - EMPFOHLENEN ERSATZTEILE	EM70/40 FT...GS...	EM70/80 FT...GS...	EM70/40 FT...GS-TR... - FT...GS-CR...	EM70/80 FT...GS-TR... - FT...GS-CR...	EM90/40 FT...GS...	EM90/80 FT...GS...	EM90/40 FT...GS-TR... - FT...GS-CR...	EM90/80 FT...GS-TR... - FT...GS-CR...	NOTE	
POS.	DESCRIZIONE	DESCRIPTION	DENOMINATION	BENENNUNG	COD.		Q. ty									
1	CRUSCOTTO	CONTROL PANEL	BANDEAU	BEDIENBLENDE	256.454.00		1		1		1		1		FROM: 15.12.2011	TO: 14.07.2015
					256.454.13		1		1		1		1		FROM: 15.07.2015	TO:....
					256.455.00			1		1		1		1	FROM: 15.12.2011	TO: 14.07.2015
					256.455.13			1		1		1		1	FROM: 15.07.2015	TO:....
2	MARCHIO	BRAND NAME	MARQUE	MARKENZEICHEN	982.021.00		1	1	1	1	1	1	1	1	FROM: 15.12.2011	TO: 31.01.2014
					982.023.00		1	1	1	1	1	1	1	1	FROM: 01.02.2014	TO:...
3	SERIGRAFIA	SCREEN PRINT	SÉRIGRAPHIE	SIEBDRUCK	910.163.00		1	2			1	2				
					910.166.00				1	2			1	2		
4	LABIRINTO	LABYRINTH	LABYRINTHE	LABYRINTH	256.235.00		1	2	1	2	1	2	1	2		
5	MANOPOLA	KNOB	BOUTON	DREHKNOPF	256.217.00	*	1	2			1	2				
					256.243.00	*			1	2			1	2		
6	CASSETTO	DRAWER	TIROIR	SCHUBLADE	6111248.00		1		1		1		1			
					6111249.00			1		1		1		1		
7	PIEDINO	FOOT	PIED	STELLFUSS	951.083.00		4	4	4	4	4	4	4	4	SOLO VERSIONE (-T)	ONLY (-T) VERSION
8	PIASTRINA GIUNZIONE	FIXING PLATE	PLAQUETTE FIXAGE	BEFESTIGUNGSPLATTE	941.130.00		1	1	1	1	1	1	1	1		
9	GRIGLIA CAMINO	FLUE GRIDDLE	GRILLE POUR CHEMINÉE	KAMINROST	982.012.00		1	2	1	2	1	2	1	2		
10	ACCENDITORE PIEZO	PIEZO LIGHTER	ALLUMEUR PIEZO	PIEZOZÜNDER	912.091.00	*	1	2	1	2	1	2	1	2		
10a	CAPPUCCIO	CAP	CAPUCHON	KAPPE	951.047.00		1	2	1	2	1	2	1	2		
11																
12																
13																
14																
15																
16																
17																
18																
19																
20																
21																
22																
23																
24																
25																
26																
27																
28																
29																
30																
31																
32																
33																
34																
35																

Mod.:	_70/… FT…G… - _90/… FT…G… EXTREME			cod. / num. 2531682.00		RICAMBI CONSIGLIATI - RECOMMENDED SPARE PARTS - PIECES DETACHÉES RECOMMANDÉES - EMPFOHLENEN ERSATZTEILE	EM70/40 FT…G…	EM70/80 FT…G…	EM90/40 FT…G…	EM90/80 FT…G…	EM90/40 FT…G-CR… - FT…G-TR	EM90/80 FT…G-CR… - FT…G-TR	NOTE	
				data / date 16/06/2014										
				rif. / ref. 2531681.00										
POS.	DESCRIZIONE	DESCRIPTION	DENOMINATION	BENENNUNG	COD.		Q. ty							
1	CRUSCOTTO	CONTROL PANEL	BANDEAU	BEDIENBLENDE	256.454.00		1		1		1		**FROM: 15.12.2011**	**TO: 14.07.2015**
					256.454.13		1		1		1		**FROM: 15.07.2015**	**TO:….**
					256.455.00			1		1		1	**FROM: 15.12.2011**	**TO: 14.07.2015**
					256.455.13			1		1		1	**FROM: 15.07.2015**	**TO:….**
2	MARCHIO	BRAND NAME	MARQUE	MARKENZEICHEN	982.021.00		1	1	1	1	1	1	**FROM: 15.12.2011**	**TO: 31.01.2014**
					982.023.00		1	1	1	1	1	1	**FROM: 01.02.2014**	**TO:…**
3	SERIGRAFIA	SCREEN PRINT	SÉRIGRAPHIE	SIEBDRUCK	910.163.00		1	2	1	2				
					910.166.00						1	2		
4	LABIRINTO	LABYRINTH	LABYRINTHE	LABYRINTH	256.235.00		1	2	1	2	1	2		
5	MANOPOLA	KNOB	BOUTON	DREHKNOPF	256.217.00	*	1	2	1	2				
					256.243.00	*					1	2		
6	CASSETTO	DRAWER	TIROIR	SCHUBLADE	6111248.00		1		1		1			
					6111249.00			1		1		1		
7	PIEDINO	FOOT	PIED	STELLFUSS	951.083.00		4	4	4	4	4	4	SOLO VERSIONE (-T)	ONLY (-T) VERSION
8	PIASTRINA GIUNZIONE	FIXING PLATE	PLAQUETTE FIXAGE	BEFESTIGUNGSPLATTE	941.130.00		1	1	1	1	1	1		
9	GRIGLIA CAMINO	FLUE GRIDDLE	GRILLE POUR CHEMINÉE	KAMINROST	982.012.00		1	2	1	2	1	2		
10	ACCENDITORE PIEZO	PIEZO LIGHTER	ALLUMEUR PIEZO	PIEZOZÜNDER	912.091.00	*	1	2	1	2	1	2		
10a	CAPPUCCIO	CAP	CAPUCHON	KAPPE	951.047.00		1	2	1	2	1	2		
11														
12														
13														
14														
15														
16														
17														
18														
19														
20														
21														
22														
23														
24														
25														
26														
27														
28														
29														
30														
31														
32														
33														
34														

Mod.:	_90/... FT…GS... SIMPLE _90/... FT…G... EXTREME			cod. / num. 2531716.00 data / date 26/06/2014 rif. / ref. 2531677.00		RICAMBI CONSIGLIATI - RECOMMENDED SPARE PARTS - PIÈCES DÉTACHÉES RECOMMANDÉES - EMPFOHLENEN ERSATZTEILE	_90/40 FT…GS...	_90/80 FT…GS...	_90/40 FT…G...	_90/80 FT…G...	NOTE	
POS.	DESCRIZIONE	DESCRIPTION	DENOMINATION	BENENNUNG	COD.		Q. ty					
100	RUBINETTO GAS	GAS TAP	ROBINET GAZ	GASHAHN	671.088.00	*	1	2	1	2		
101	TUBO GAS	GAS PIPE	TUBE GAZ	GASROHR	256.282.00		1	1				
					256.316.00				1	1		
102	TUBO GAS	GAS PIPE	TUBE GAZ	GASROHR	256.283.00		-	1				
					256.317.00				-	1		
103	TUBO GAS	GAS PIPE	TUBE GAZ	GASROHR	256.284.00		1	1				
					256.318.00				1	1		
104	TUBO GAS	GAS PIPE	TUBE GAZ	GASROHR	256.285.00		-	1				
					256.319.00				-	1		
105	GRUPPO PILOTA	PILOT GROUP	GROUPE VEILLEUSE	ZÜNDBRENNER GRUPPE	672.173.00	*	1	2	1	2		
106	TERMOCOPPIA	THERMOCOUPLE	THERMOCOUPLE	THERMOELEMENT	672.099.00	*	1	2	1	2		
107	CANDELA ACCENSIONE	IGNITION ELECTRODE	BOUGIE D'ALLUMAGE	KERZE SCHNELLBRENNER	256.060.00	*	1	2	1	2		
108	PORTAUGELLO	NOZZLE HOLDER	PORTE-INJECTEUR	SPRITZDÜSE-TRÄGER	673.023.00		1	2	1	2		
109	DADO	NUT	ÈCROU	MUTTER	673.024.00		1	2	1	2		
110	KIT UGELLI	KIT NOZZLES	KIT INJECTEURS	KIT DÜSEN	265.013.00		1	2	1	2		
111	BRUCIATORE	BURNER	BRULEUR	BRENNER	972.038.00		1	2	1	2		
112	SCARICO	DRAIN	VIDANGE	ABLAUF	931.198.00		-	-	1	1	**FROM: 15.12.2011**	**TO: 14.07.2015**
					631.175.00		-	-	1	1	**FROM: 15.07.2015**	**TO:....**
113												
114												
115												
116												
117												
118												
119												
120												
121												
122												
123												
124												
125												
126												
127												
128												
129												
130												
131												
132												
133												
134												

Mod.:	_90/... FT...GS-CR... / -TR... SIMPLE _90/... FT...G-CR... / -TR... EXTREME			cod. / num. 2531638.00 data / date 26/06/2014 rif. / ref. 2531683.00		RICAMBI CONSIGLIATI - RECOMMENDED SPARE PARTS - PIÈCES DÉTACHÉES RECOMMANDÉES - EMPFOHLENEN ERSATZTEILE	_90/40 FT...GS-CR... - FT...GS-TR...	_90/80 FT...GS-CR... - FT...GS-TR...	_90/40 FT...G-CR... - FT...G-TR...	_90/80 FT...G-CR... - FT...G-TR...	NOTE	
POS.	DESCRIZIONE	DESCRIPTION	DENOMINATION	BENENNUNG	COD.		Q. ty					
100	VALVOLA GAS	GAS VALVE	SOUPAPE GAZ	GAS VENTIL	256.277.00	*	1	2	1	2		
100a	ATTACCO	JOINT	JOINT	ATTACK	941.129.00		1	2	1	2		
101	TUBO GAS	GAS PIPE	TUBE GAZ	GASROHR	256.290.00		1	1				
					256.320.00				1	1		
102	TUBO GAS	GAS PIPE	TUBE GAZ	GASROHR	256.291.00		-	1				
					256.321.00				-	1		
103	TUBO GAS	GAS PIPE	TUBE GAZ	GASROHR	256.292.00		1	1				
					256.322.00	*			1	1		
104	TUBO GAS	GAS PIPE	TUBE GAZ	GASROHR	256.293.00	*	-	1				
					256.323.00	*			-	1		
105	GRUPPO PILOTA	PILOT GROUP	GROUPE VEILLEUSE	ZÜNDBRENNER GRUPPE	672.173.00		1	2	1	2		
106	TERMOCOPPIA	THERMOCOUPLE	THERMOCOUPLE	THERMOELEMENT	6101081.00		1	2	1	2		
107	CANDELA ACCENSIONE	IGNITION ELECTRODE	BOUGIE D'ALLUMAGE	KERZE SCHNELLBRENNER	256.060.00		1	2	1	2		
108	PORTAUGELLO	NOZZLE HOLDER	PORTE-INJECTEUR	SPRITZDÜSE-TRÄGER	673.023.00		1	2	1	2		
109	DADO	NUT	ÈCROU	MUTTER	673.024.00		1	2	1	2		
110	KIT UGELLI	KIT NOZZLES	KIT INJECTEURS	KIT DÜSEN	265.014.00		1	2	1	2		
108	BRUCIATORE	BURNER	BRULEUR	BRENNER	972.038.00		1	2	1	2		
109	TERMOSTATO SICUREZZA	SAFETY THERMOSTAT	THERMOSTAT DE SECURITÉ	TEMPERATURBEGRENZER	661.115.00	*	1	2	1	2		
110	SCARICO	DRAIN	VIDANGE	ABLAUF	931.198.00		1	1	1	1	**FROM: 15.12.2011**	**TO: 14.07.2015**
					631.175.00		1	1	1	1	**FROM: 15.07.2015**	**TO:....**
111												
112												
113												
114												
115												
116												
117												
118												
119												
120												
121												
122												
123												
124												
125												
126												
127												
128												
129												
130												

Mod.:	_70/... - _90/… VANO / CABINET …B - …BE - …BH2			cod. / num. 2531579.00 data / date 05/06/2014 rif. / ref. 2531578.00		RICAMBI CONSIGLIATI - RECOMMENDED SPARE PARTS - PIÈCES DÉTACHÉES RECOMMANDÉES - EMPFOHLENEN ERSATZTEILE	EM70/40 ...	EM70/80 ...	EM70/120 ...	EM90/40 ...	EM90/80 ...	EM90/120 ...	NOTE	
POS.	DESCRIZIONE	DESCRIPTION	DENOMINATION	BENENNUNG	COD.		Q. ty							
200	PIEDINO	FOOT	PIED	STELLFUSS	912.090.00		4	4	4	4	4	4	FROM: 15.12.2011	TO: 17.05.2013
					912.090.14		4	4	4	4	4	4	FROM: 18.05.2013	TO:...
201	PORTA	DOOR	PORTE	TÜR	256.215.00		1	2	3	1	2	3		
202	COPPIA CERNIERE	GASKETS PAIR	COUPLE CHARNIÈRES	SCHARNIERPAAR	256.216.00		1	2	3	1	2	3		
203	MAGNETE	MAGNET	MAGNÉTO	MAGNET	684.007.00		1	2	3	1	2	3	FROM: 15.12.2011	TO: 01.01.2014
					984.006.00		1	2	3	1	2	3	FROM: 02.01.2014	TO:...
204	FISSAGGIO	FIXING	FIXAGE	BEFESTIGUNG	256.431.00		4	4	4	4	4	4	FROM: 04.05.2015	TO:...
205														
206														
207														
208														
209														
210														
211														
212														
213														
214														
215														
216														
217														
218														
219														
220														
221														
222														
223														
224														
225														
226														
227														
228														
229														
230														
231														
232														
233														
234														