lamber

BEHA HEDO INDUSTRIER A/S

F92-ek standard marina

Ed. 09/2008

Rev. B

Dishwashers

F92-ek standard/marina

SPARE PARTS

CE

lamber	WASH COMPONENTS	MOD. F92-ek F92-ek-marina	TAV. 1 B ED. 09/2008

TAV. 1 DI 8

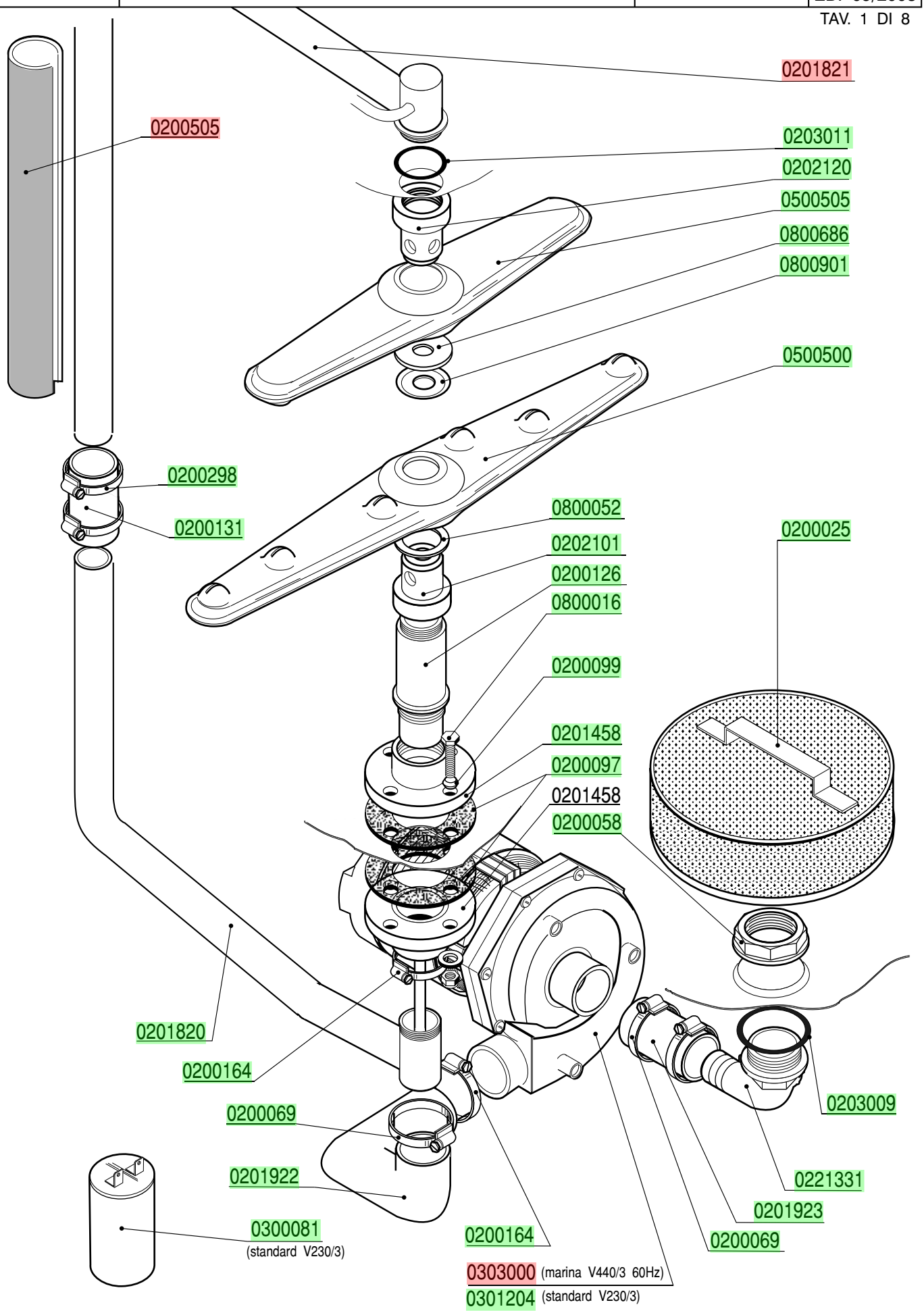

lamber	RINSE COMPONENTS	MOD. F92-ek F92-ek-marina	TAV. 2 B ED. 09/2008

TAV. 2 DI 8

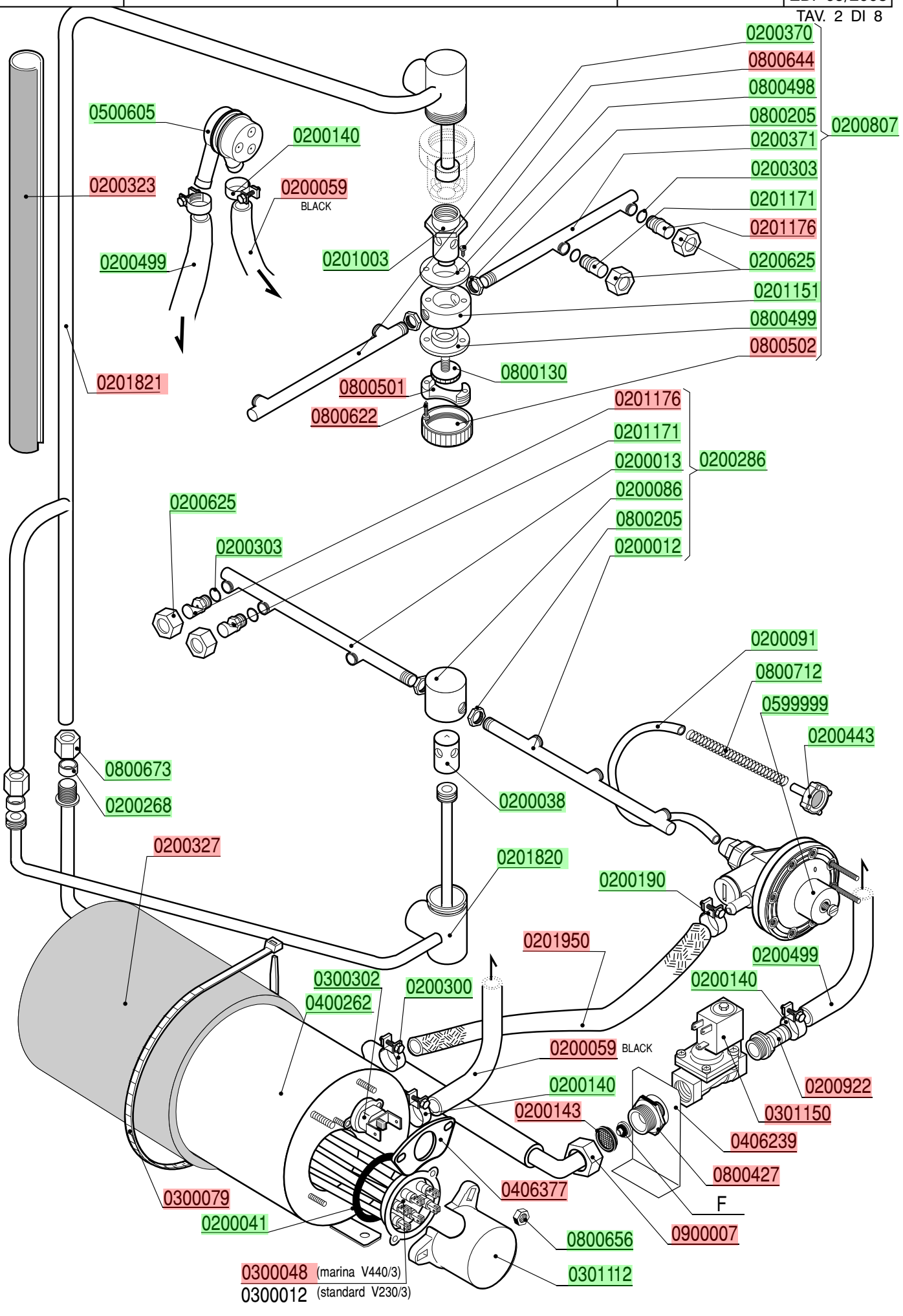

lamber	TANK COMPONENTS	MOD. F92-ek F92-ek-marina	TAV. 3 B ED. 09/2008

TAV. 3 DI 8

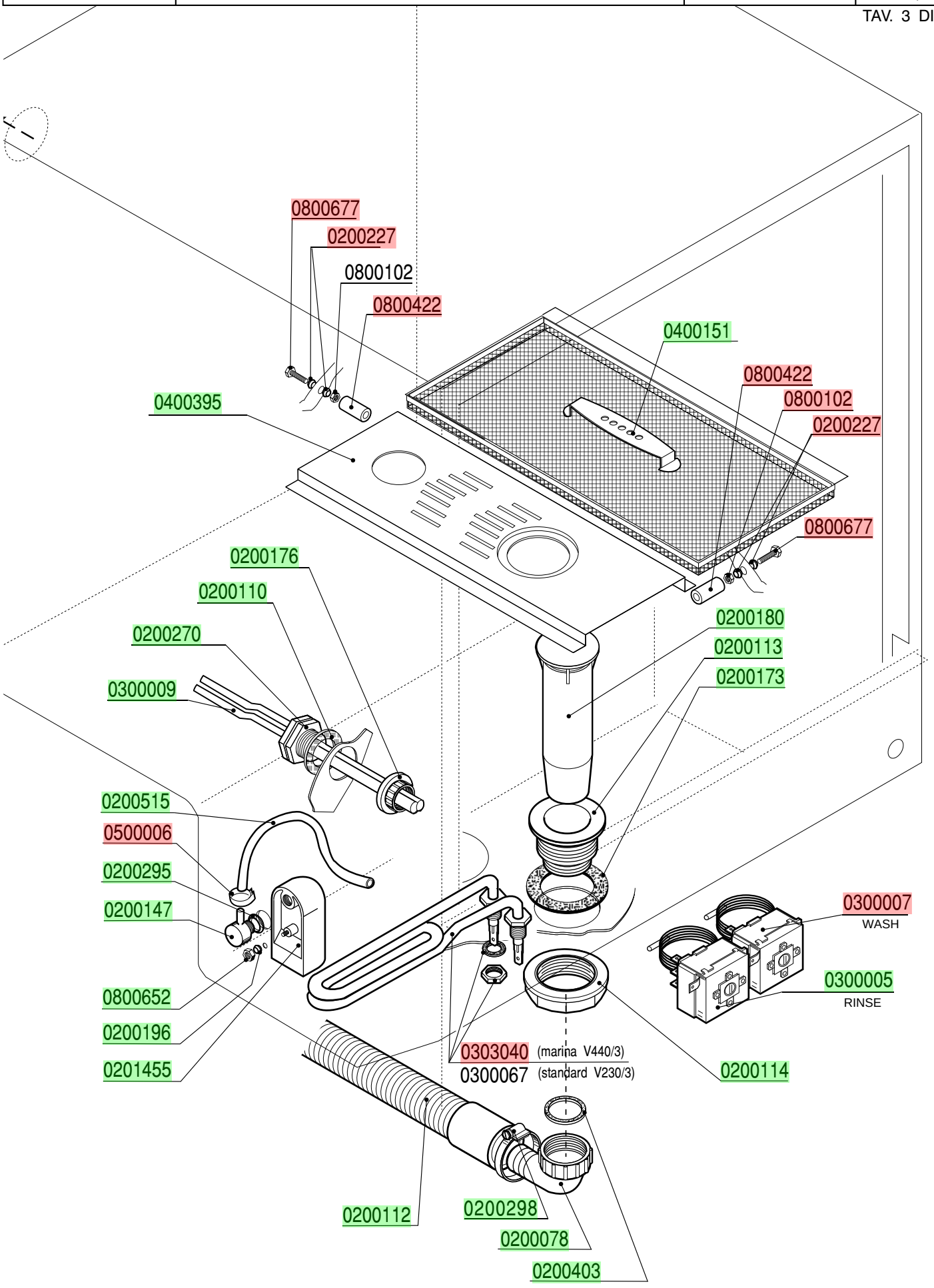

lamber	CONTROL BOX	MOD. F92-ek F92-ek-marina	TAV. 4 B ED. 09/2008

TAV. 4 DI 8

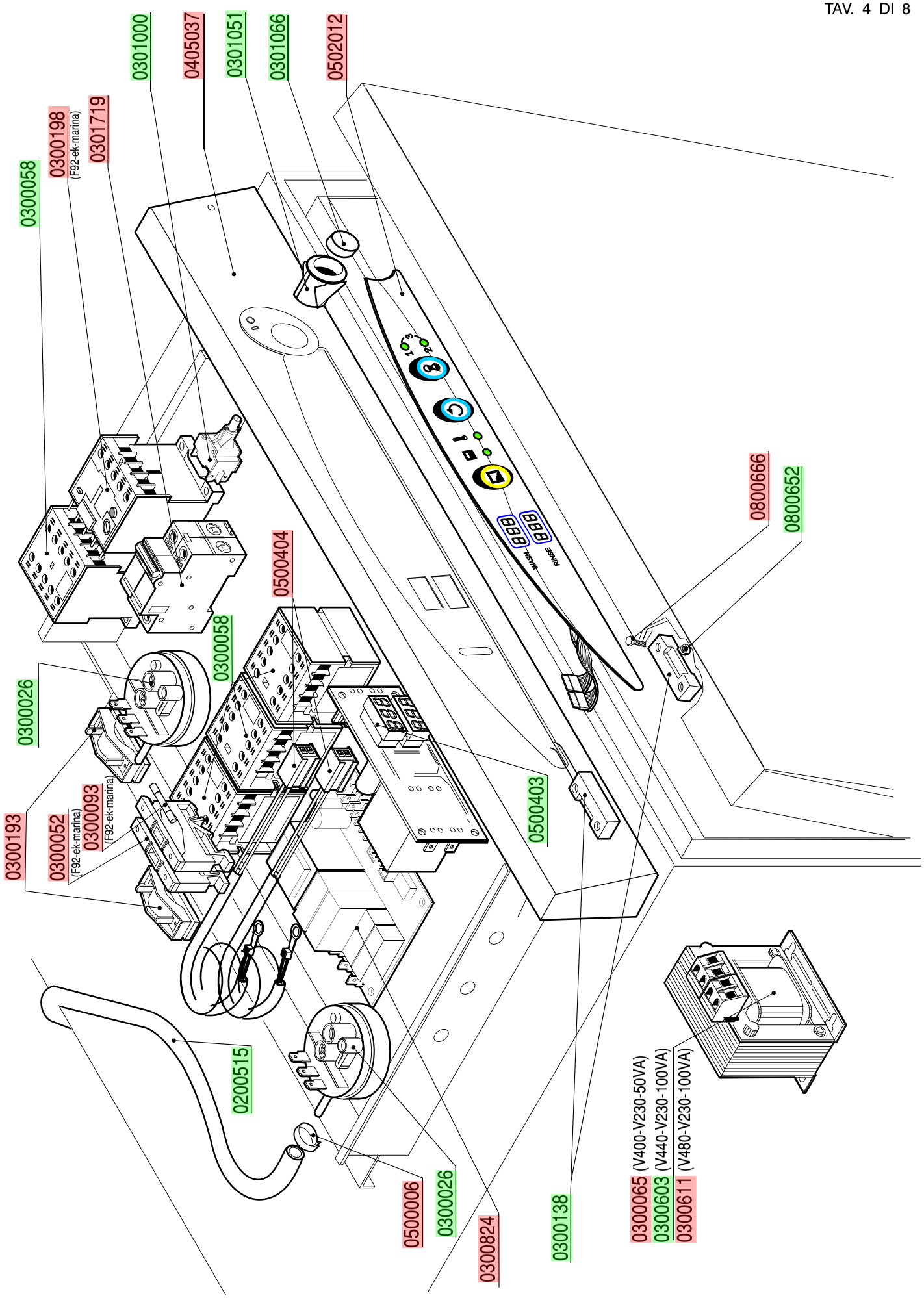

lamber	DRAIN PUMPE PARTS	MOD. F92-ek F92-ek-marina	TAV. 5 B ED. 09/2008

TAV. 5 DI 8

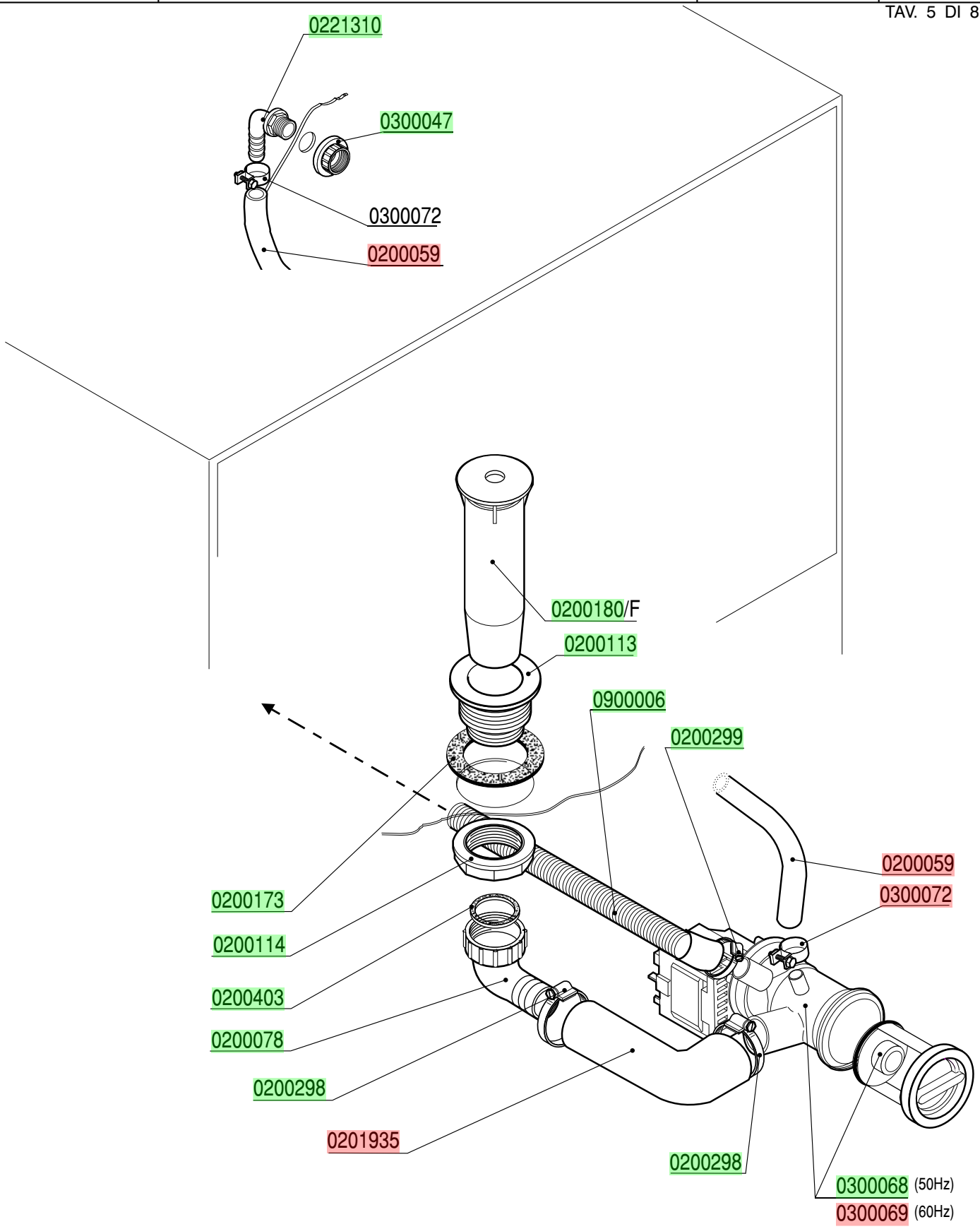

lamber	DOOR	MOD. F92-ek F92-ek-marina	TAV. 6 B ED. 09/2008

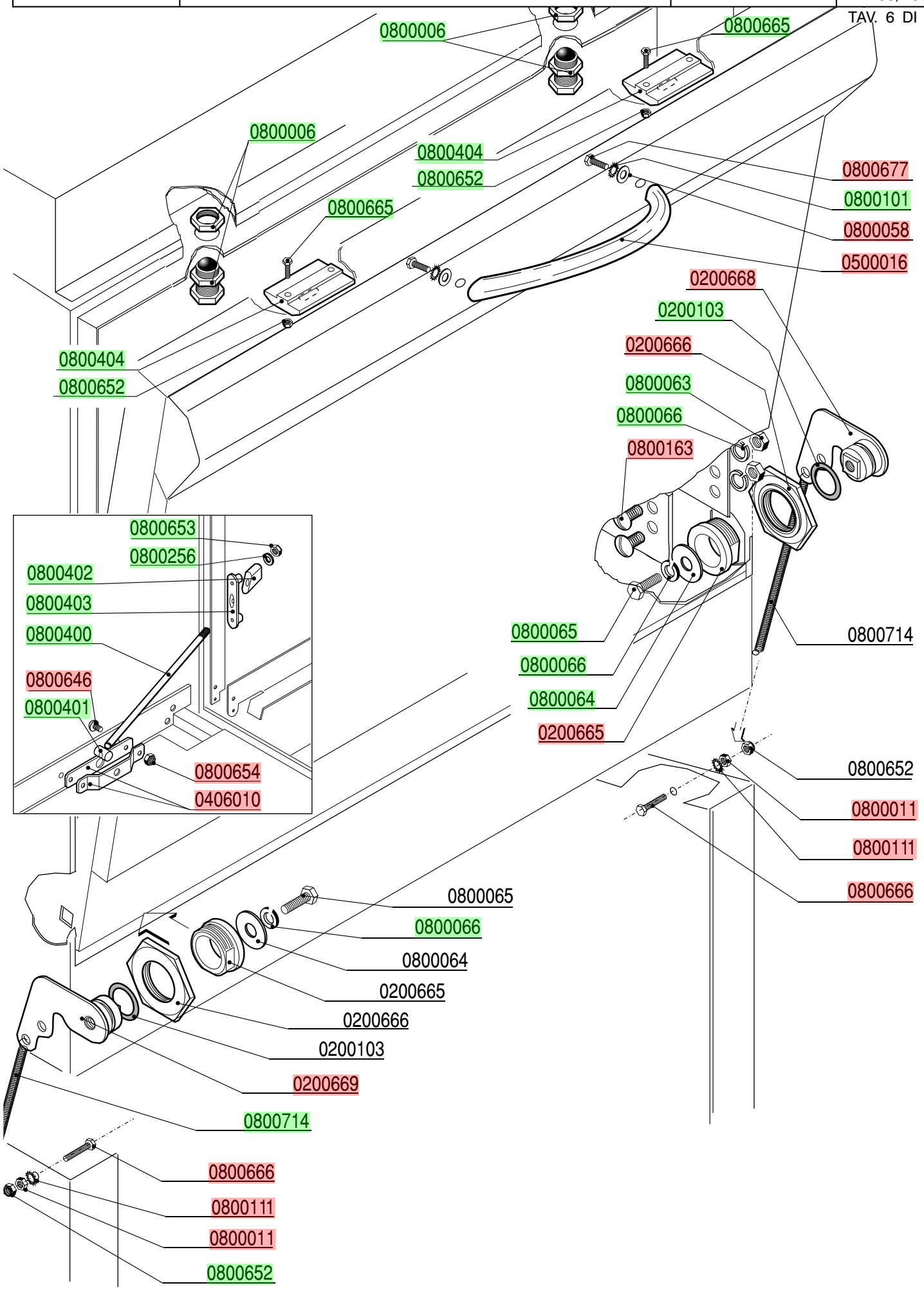

lamber	HOOD	MOD. F92-ek F92-ek-marina	TAV. 7 B ED. 09/2008

TAV. 7 DI 8

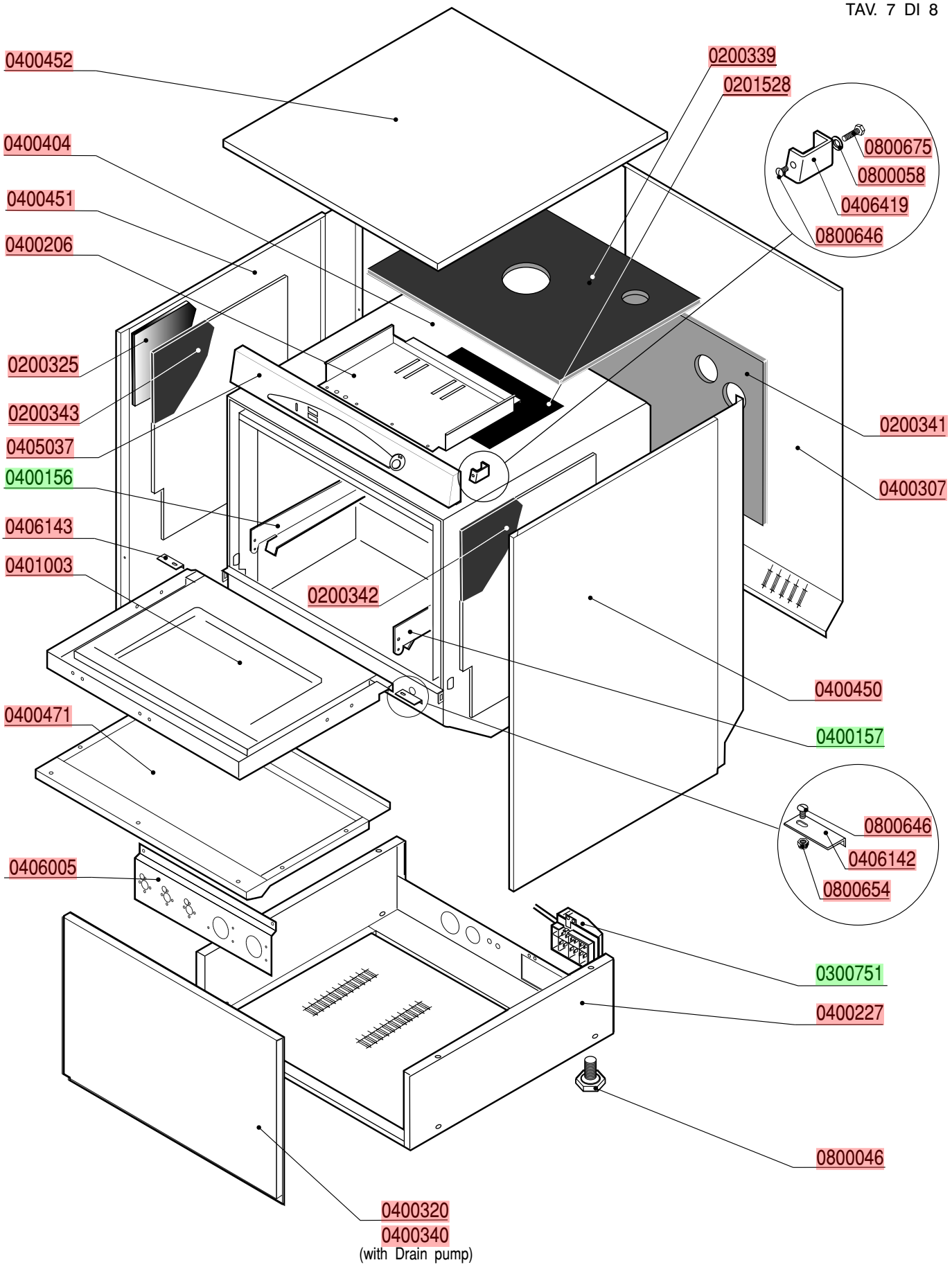

RINSE AID DISPENSER

cod. 0599999

