DESPIECE TECNICO

# Cocinas eléctricas
# Electric ranges
# Fourneaux électriques
# Elektro-herde
# Cucine elettriche
# Fogões elétricos

## GAMA SNACK

## Modelos:

**CE6-20**
**CE6-40**
**CE6-41**

***Junio 2009 June***

***Revisado Mayo 2013 May Revised***

FAGOR

FAGOR INDUSTRIAL

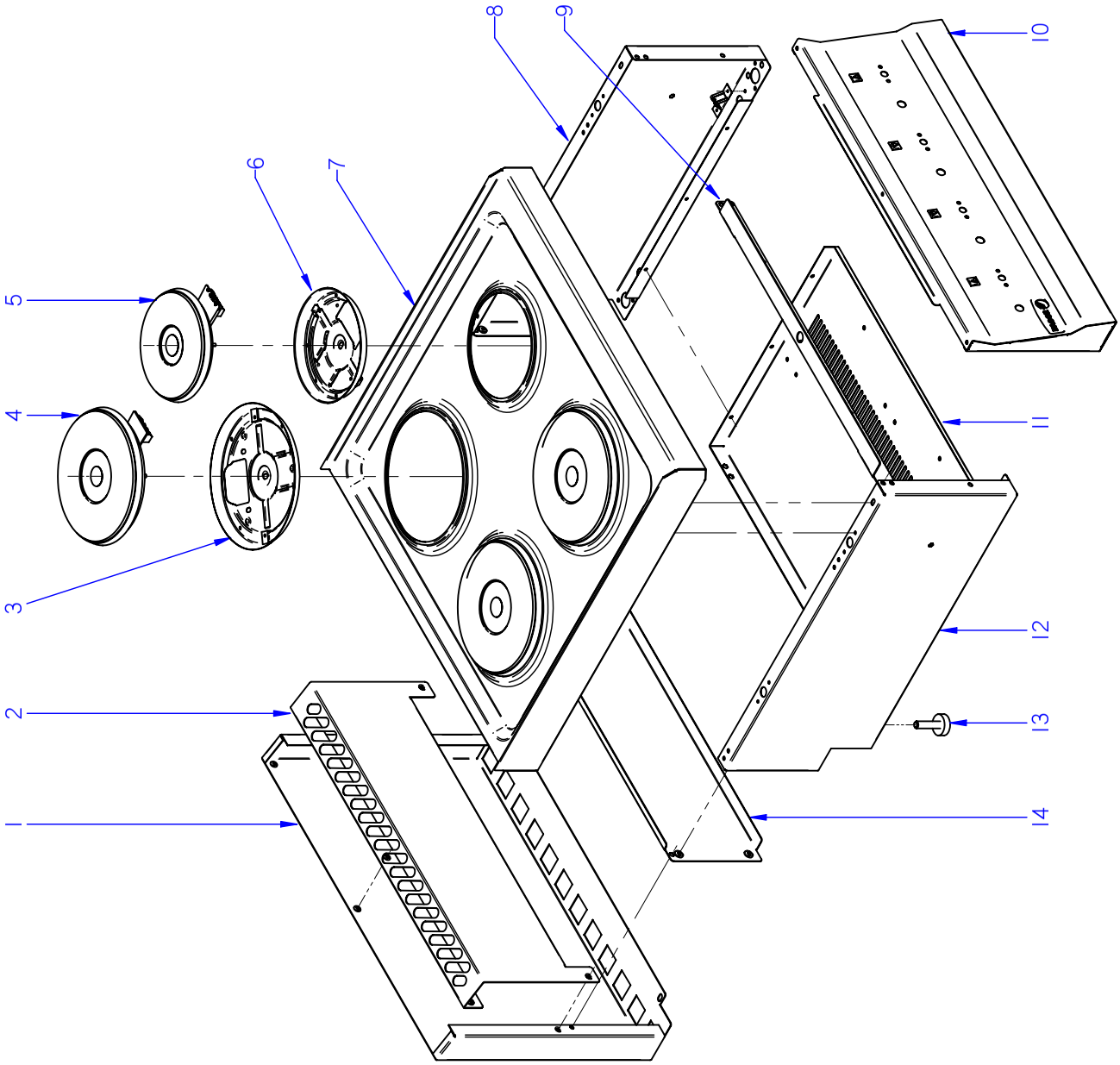


ITEM MARCADO EN COLOR = REPUESTO RECOMENDADO
COLOURED ITEM = RECOMMENDED SPARE PART

| N plano | Firma | Fecha | Aparato | MUEBLE | Lamina | |
|---|---|---|---|---|---|---|
| C-2376 | | 2009-06 | COCINAS CE6-20 / CE6-40 | | 1 | Fagor Industrial S.Coop. FAGOR Oñate |

| MOD. | COCINAS /RANGES | ZONA | MUEBLE / UNIT | PLANO | C-2376 |
|---|---|---|---|---|---|

| ITEM | CODIGO | DENOMINACION | TEXTO | CE6-20 | CE6-40 | | | | | | NOTAS |
|---|---|---|---|---|---|---|---|---|---|---|---|
| 1 | J142809000 | PROTECCION CHIMENEA POS. 400 | PROTECTION CHIMEMEY POS. | 1 | _ | | | | | | ELIMINADA 27.11.11 |
| 1 | J142815000 | PROTECTOR CHIMENEA FRYES 400 | PROTEC. CHIMENEA FRYES 40 | 1 | _ | | | | | | INTRODUC. 27.11.11 |
| 1 | J142812000 | PROTECCION CHIMENEA POS. 600 | PROTECTION CHIMEMEY POS. | _ | 1 | | | | | | ELIMINADA 27.11.11 |
| 1 | J142816000 | PROTECCION CHIMENEA POS. 600 | PROTECTION CHIMEMEY POS. | _ | 1 | | | | | | INTRODUC. 27.11.11 |
| | Q419005000 | REMACHE 4X8 ALMG3 / ALUMINIO | RIVET 4X8 ALMG3 / ALUMINIUM | 2 | 2 | | | | | | |
| 2 | J142810000 | PROTECCION CHIMENEA ANT. 400 | PROTECTION CHIMENEY ANT | 1 | _ | | | | | | ELIMINADA 01.04.2010 |
| 2 | J142829000 | PROTECCION CHIMENEA FREID. | PROTECTION CHIMENEY | 1 | _ | | | | | | INTRODUC. 01.04.2010 |
| 2 | J142813000 | PROTECCION CHIMENEA ANT. 600 | PROTECTION CHIMENEY ANT | _ | 1 | | | | | | ELIMINADA 01.04.2010 |
| 2 | J142830000 | PROTECCION CHIMENEA ANT. 600 | PROTECTION CHIMENEY ANT | _ | 1 | | | | | | INTRODUC. 01.04.2010 |
| | Q012031000 | TORNILLO EXAGONAL M5x10 A304 | HEXAGONAL BOLT M5x10 A304 | 4 | 4 | | | | | | |
| | Q302022000 | ARANDELA 16x6x1,2 A304 | WASHER 16x6x1.2 A304 | 4 | 4 | | | | | | |
| | Q221342000 | REMACHE EXAGONAL M5 | HEXAGONAL RIVET M5 | 3 | 3 | | | | | | |
| 3 | J032601000 | CAZOLETA 2000W | CASING 2000W | 2 | 3 | | | | | | |
| 4 | J033001000 | PLACA PUNTO ROJO 2000W-230V | RED POINT PLATE 2000W-230V | 2 | 3 | | | | | | |
| 5 | U803002000 | PLACA PUNTO ROJO 1500W-230V | RED POINT PLATE 500W-230V | _ | 1 | | | | | | |
| 6 | U793031000 | CAZOLETA 1500W.ULGOR | CASING1500W.ULGOR | _ | 1 | | | | | | |
| | Z608410000 | CASQUILLO AMARRE TECLADO | KEYBOARD ANCHORAGE BUSH | 2 | 4 | | | | | | ELIMINADA 01.09.2010 |
| | Q162040000 | TUERCA EXAGONAL M6 | HEXAGONAL NUT M6 | 2 | 4 | | | | | | |
| | Q302022000 | ARANDELA 16X6X1.2 A.304 | WASHER 16X6X1.2 A.304 | 2 | 4 | | | | | | |
| 7 | J035409000 | ENCIMERA CE6-20 COMPL. | TOP CE6-20 COMPL. | 1 | _ | | | | | | |
| 7 | J035410000 | ENCIMERA CE6-40 COMPL. | TOP CE6-40 COMPL. | _ | 1 | | | | | | |
| | Q221342000 | REMACHE EXAGONAL M5 | HEXAGONAL RIVET M5 | 4 | 4 | | | | | | |
| | X012612000 | PITON CIERRE | LOCK SPIKE | 2 | 4 | | | | | | ELIMINADA 01.04.2010 |
| | Z442919000 | PITON CIERRE | LOCK SPIKE | 2 | 4 | | | | | | INTRODUC. 01.04.2010 |
| | Q221342000 | REMACHE EXAGONAL M5 | HEXAGONAL RIVET M5 | 2 | 2 | | | | | | |
| 8 | J002802000 | PANEL LATERAL DERECHO | RIGHT SIDE PANEL | 1 | 1 | | | | | | ELIMINADA 01.04.2010 |
| 8 | J002834000 | PANEL LATERAL DERECHO | RIGHT SIDE PANEL | 1 | 1 | | | | | | INTRODUC. 01.04.2010 |
| | Q221342000 | REMACHE EXAGONAL M5 | HEXAGONAL RIVET M5 | 1 | 1 | | | | | | |
| | Q419007000 | REMACHE TUBULAR C/V D3.2X6 | TUBULAR RIVET C/V D3.2X6 | 8 | 8 | | | | | | |
| | X010503000 | CIERRE MUELLE | LOCK SPRING | 4 | 4 | | | | | | ELIMINADA 01.04.2010 |
| | Z442918000 | CLIP CIERRE | LOCK SPRING | 4 | 4 | | | | | | INTRODUC. 01.04.2010 |

| MOD. | COCINAS /RANGES | ZONA | MUEBLE / UNIT | PLANO | C-2376 |
|---|---|---|---|---|---|

| ITEM | CODIGO | DENOMINACION | TEXTO | CE6-20 | CE6-40 | | | | | | NOTAS |
|---|---|---|---|---|---|---|---|---|---|---|---|
| 9 | J002610000 | GUÍA PANEL PORTAMANDOS | GUIDE PANEL OF CONTROLS | 1 | _ | | | | | | |
| 9 | J002612000 | GUÍA PANEL PORTAMANDOS 600 | GUIDE PANEL OF CONTROLS | _ | 1 | | | | | | |
| | Q221342000 | REMACHE EXAGONAL M5 | HEXAGONAL RIVET M5 | 4 | 4 | | | | | | |
| | Q012031000 | TORNILLO EXAGONAL M5x10 A304 | HEXAGONAL BOLT M5x10 A304 | 4 | 4 | | | | | | |
| 10 | J242802000 | PORTAMANDOS COMPL. CE6-20 | CONTROL HOLDER CE6-20 | 1 | _ | | | | | | |
| 10 | J242804000 | PORTAMANDOS COMPL. CE6-40 | CONTROL HOLDER CE6-40 | _ | 1 | | | | | | |
| | U022836000 | ESCUDO FAGOR | FAGOR EMBLEM | 1 | 1 | | | | | | |
| | Q221023000 | CLIP SUJECIÓN RÁPIDA Ø5 | RAPID CONNECT CLIP Ø5 | 2 | 2 | | | | | | |
| | Q419005000 | REMACHE 4x8 ALMG3 / ALUMINIO | RIVET 4X8 ALMG3 / ALUMINIUM | 6 | 6 | | | | | | |
| | Q012031000 | TORNILLO EXAGONAL M5x10 A304 | HEXAGONAL BOLT M5x10 A304 | 2 | 2 | | | | | | |
| | Q302022000 | ARANDELA 16x6x1,2 A304 | WASHER 16x6x1.2 A304 | 2 | 2 | | | | | | |
| 11 | J002604000 | BASE INFERIOR 400 | LOWER BASE 400 | 1 | _ | | | | | | |
| 11 | J002607000 | BASE INFERIOR 600 | LOWER BASE 600 | _ | 1 | | | | | | |
| | Q419005000 | REMACHE 4x8 ALMG3 / ALUMINIO | RIVET 4X8 ALMG3 / ALUMINIUM | 6 | 6 | | | | | | |
| 12 | J002801000 | PANEL LATERAL IZQUIERDO | LEFT SIDE PANEL | 1 | 1 | | | | | | ELIMINADA 01.04.2010 |
| 12 | J002833000 | PANEL LATERAL IZQUIERDO | LEFT SIDE PANEL | 1 | 1 | | | | | | INTRODUC. 01.04.2010 |
| | Q221342000 | REMACHE EXAGONAL M5 | HEXAGONAL RIVET M5 | 1 | 1 | | | | | | |
| | Q419007000 | REMACHE TUBULAR C/V D3.2X6 | TUBULAR RIVET C/V D3.2X6 | 8 | 8 | | | | | | |
| | X010503000 | CIERRE MUELLE | LOCK SPRING | 4 | 4 | | | | | | ELIMINADA 01.04.2010 |
| | Z442918000 | CLIP CIERRE | LOCK SPRING | 4 | 4 | | | | | | INTRODUC. 01.04.2010 |
| 13 | Z200107000 | PATA REGULABLE | ADJUSTABLE LEG | 4 | 4 | | | | | | |
| 14 | J002803000 | PANEL POSTERIOR 400 | REAR PANEL 400 | 1 | _ | | | | | | |
| 14 | J002804000 | PANEL POSTERIOR 600 | REAR PANEL 600 | _ | 1 | | | | | | |
| | Q419005000 | REMACHE 4x8 ALMG3 / ALUMINIO | RIVET 4X8 ALMG3 / ALUMINIUM | 4 | 4 | | | | | | |
| | | | | | | | | | | | |
| | | | | | | | | | | | |
| | | | | | | | | | | | |
| | | | | | | | | | | | |
| | | | | | | | | | | | |
| | | | | | | | | | | | |
| | | | | | | | | | | | |

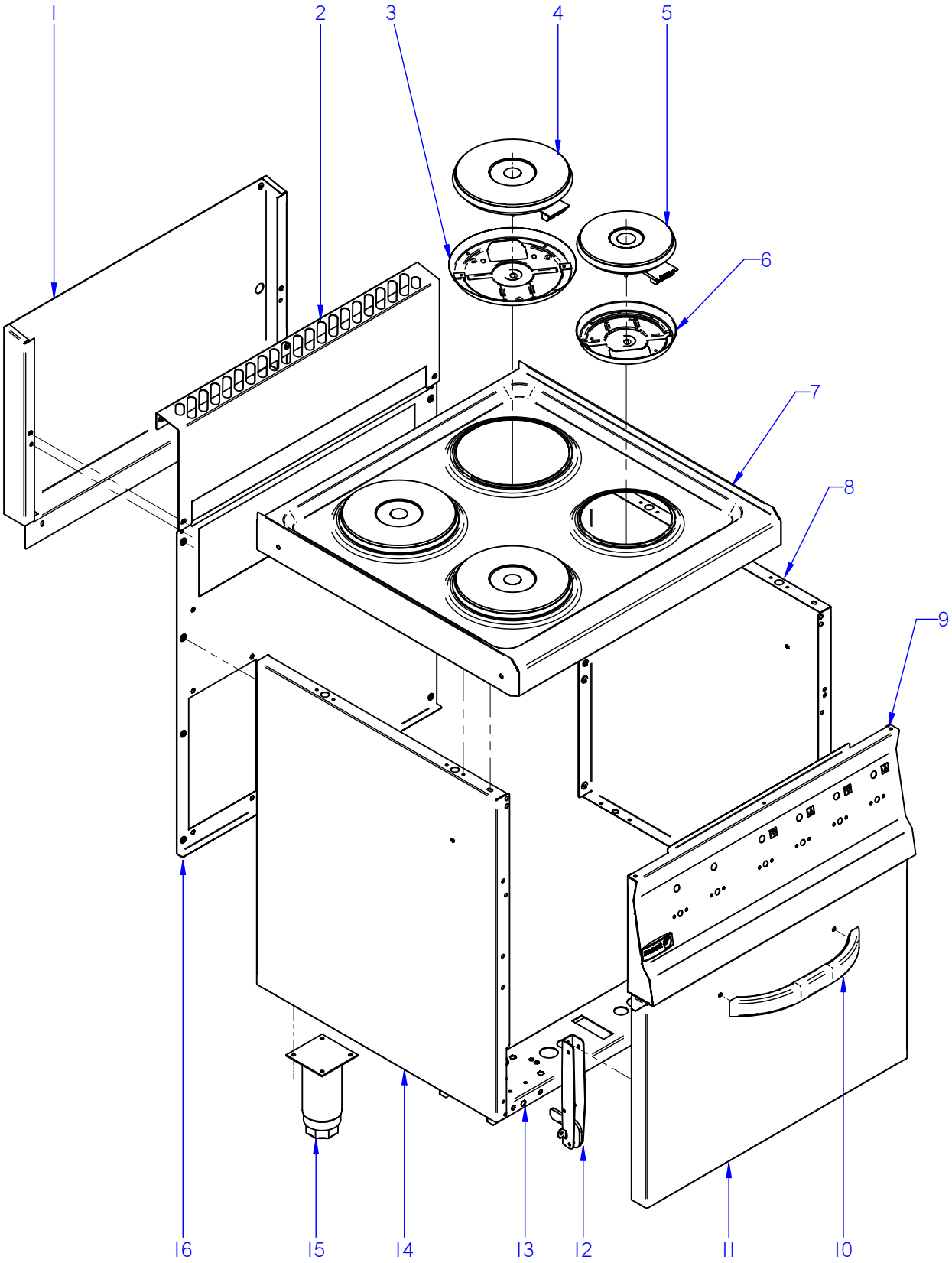


ITEM MARCADO EN COLOR = REPUESTO RECOMENDADO
COLOURED ITEM = RECOMMENDED SPARE PART

| N plano | Firma | Fecha | Aparato | MUEBLE | Lamina | |
|---|---|---|---|---|---|---|
| C-2377 | | 2009-06 | COCINA CE6-41 | | 2 | Fagor Industrial S.Coop. FAGOR Oñate |

| MOD. | COCINAS /RANGES | ZONA | MUEBLE / UNIT | PLANO | C-2377 |
|---|---|---|---|---|---|

| ITEM | CODIGO | DENOMINACION | TEXTO | CE6-41 | | | | | | | NOTAS |
|---|---|---|---|---|---|---|---|---|---|---|---|
| 1 | J042801000 | PROTECCION CHIMENEA POST. | PROTECTION CHIMEMEY POS. | 1 | | | | | | | |
| | Q419005000 | REMACHE 4X8 ALMG3 / ALUMINIO | RIVET 4X8 ALMG3 / ALUMINIUM | 2 | | | | | | | |
| 2 | J142813000 | PROTECCION CHIMENEA ANT. 600 | PROTECTION CHIMENEY ANT | 1 | | | | | | | ELIMINADA 01.04.2010 |
| 2 | J142830000 | PROTECCION CHIMENEA ANT. 600 | PROTECTION CHIMENEY ANT | 1 | | | | | | | INTRODUC. 01.04.2010 |
| | Q012031000 | TORNILLO EXAGONAL M5x10 A304 | HEXAGONAL BOLT M5x10 A304 | 4 | | | | | | | |
| | Q302022000 | ARANDELA 16x6x1,2 A304 | WASHER 16x6x1.2 A304 | 4 | | | | | | | |
| 3 | J032601000 | CAZOLETA 2000W | CASING 2000W | 3 | | | | | | | |
| 4 | J033001000 | PLACA PUNTO ROJO 2000W-230V | RED POINT PLATE 2000W-230V | 3 | | | | | | | |
| 5 | U803002000 | PLACA PUNTO ROJO 1500W-230V | RED POINT PLATE 500W-230V | 1 | | | | | | | |
| 6 | U793031000 | CAZOLETA 1500W.ULGOR | CASING1500W.ULGOR | 1 | | | | | | | |
| | Z608410000 | CASQUILLO AMARRE TECLADO | KEYBOARD ANCHORAGE BUSHI | 4 | | | | | | | ELIMINADA 01.09.2010 |
| | Q162040000 | TUERCA EXAGONAL M6 | HEXAGONAL NUT M6 | 4 | | | | | | | |
| | Q302022000 | ARANDELA 16X6X1.2 A.304 | WASHER 16X6X1.2 A.304 | 4 | | | | | | | |
| 7 | J035410000 | ENCIMERA CE6-40 COMPL. | TOP CE6-40 COMPL. | 1 | | | | | | | |
| | Q221342000 | REMACHE EXAGONAL M5 | HEXAGONAL RIVET M5 | 4 | | | | | | | |
| | X012612000 | PITON CIERRE | LOCK SPIKE | 2 | | | | | | | ELIMINADA 01.04.2010 |
| | Z442919000 | PITON CIERRE | LOCK SPIKE | 2 | | | | | | | INTRODUC. 01.04.2010 |
| | Q221342000 | REMACHE EXAGONAL M5 | HEXAGONAL RIVET M5 | 2 | | | | | | | |
| 8 | J022802000 | PANEL LATERAL DCHO CG6-41 | LATERAL RIGHT RANGE CG6-41 | 1 | | | | | | | ELIMINADA 01.04.2010 |
| 8 | J022816000 | PANEL LATERAL DCHO CG6-41 | LATERAL RIGHT RANGE CG6-41 | 1 | | | | | | | INTRODUC. 01.04.2010 |
| | Q419005000 | REMACHE 4X8 ALMG3 / ALUMINIO | RIVET 4X8 ALMG3 / ALUMINIUM | 4 | | | | | | | |
| | X010503000 | CIERRE MUELLE | LOCK SPRING | 2 | | | | | | | ELIMINADA 01.04.2010 |
| | Z442918000 | CLIP CIERRE | LOCK SPRING | 2 | | | | | | | INTRODUC. 01.04.2010 |
| | Q419007000 | REMACHE TUBULAR C/V D3.2X6 | TUBULAR RIVET C/V D3.2X6 | 4 | | | | | | | |
| | Q221342000 | REMACHE EXAGONAL M5 | HEXAGONAL RIVET M5 | 1 | | | | | | | |
| 9 | J042803000 | PORTAMANDOS COMPL. CE6-41 | CONTROL HOLDER CE6-41 | 1 | | | | | | | |
| | U022836000 | ESCUDO FAGOR | FAGOR EMBLEM | 1 | | | | | | | |
| | Q221023000 | CLIP SUJECIÓN RÁPIDA Ø5 | RAPID CONNECT CLIP Ø5 | 2 | | | | | | | |
| | Q419005000 | REMACHE 4x8 ALMG3 / ALUMINIO | RIVET 4X8 ALMG3 / ALUMINIUM | 6 | | | | | | | |
| | Q012031000 | TORNILLO EXAGONAL M5x10 A304 | HEXAGONAL BOLT M5x10 A304 | 2 | | | | | | | |
| | Q302022000 | ARANDELA 16x6x1,2 A304 | WASHER 16x6x1.2 A304 | 2 | | | | | | | |

| MOD. | COCINAS /RANGES | ZONA | MUEBLE / UNIT | PLANO | C-2377 |
|---|---|---|---|---|---|

| ITEM | CODIGO | DENOMINACION | TEXTO | CE6-41 | | | | | | | NOTAS |
|---|---|---|---|---|---|---|---|---|---|---|---|
| 10 | Z400542000 | ASA LVS. | HANDLE LVS. | 1 | | | | | | | |
| | Q012041000 | TORNILLO EXAGONAL M6x10 | HEXAGONAL BOLT M6x10 | 2 | | | | | | | |
| | Q302022000 | ARANDELA 16x6x1,2 A304 | WASHER 16x6x1.2 A304 | 2 | | | | | | | |
| | **1100003427** | **KIT PUERTA DE HORNO** | **OVEN DOOR KIT** | | | | | | | | |
| 11 | J040501000 | PUERTA DE HORNO | OVEN DOOR | 1 | | | | | | | |
| 12 | U020528000 | BISAGRA CIERRE HORNO | OVEN LOCK HINGE | 2 | | | | | | | |
| | Q152022000 | TORNILLO M6x8 | BOLT M6x8 | 6 | | | | | | | |
| 13 | J002613000 | LISTON SOPORTE PATAS | TIEDOWN SUPPORTS MB6-40 | 2 | | | | | | | |
| | Q221343000 | REMACHE EXAGONAL M6 | HEXAGONAL RIVET M6 | 4 | | | | | | | |
| | Q221342000 | REMACHE EXAGONAL M5 | HEXAGONAL RIVET M5 | 1 | | | | | | | |
| 14 | J022801000 | PANEL LATERAL IZDO. CG6-41 | LATERAL LEFT RANGE CG6-41 | 1 | | | | | | | ELIMINADA 01.04.2010 |
| 14 | J022815000 | PANEL LATERAL IZDO. CG6-41 | LATERAL LEFT RANGE CG6-41 | 1 | | | | | | | INTRODUC. 01.04.2010 |
| | Q419005000 | REMACHE 4X8 ALMG3 / ALUMINIO | RIVET 4X8 ALMG3 / ALUMINIUM | 4 | | | | | | | |
| | X010503000 | CIERRE MUELLE | LOCK SPRING | 2 | | | | | | | ELIMINADA 01.04.2010 |
| | Z442918000 | CLIP CIERRE | LOCK SPRING | 2 | | | | | | | INTRODUC. 01.04.2010 |
| | Q419007000 | REMACHE TUBULAR C/V D3.2X6 | TUBULAR RIVET C/V D3.2X6 | 4 | | | | | | | |
| | Q221342000 | REMACHE EXAGONAL M5 | HEXAGONAL RIVET M5 | 1 | | | | | | | |
| 15 | X260151000 | PATA REGULABLE | ADJUSTABLE LEG | 4 | | | | | | | |
| | Q411304000 | REMACHE AVIBULB Ø 4,8 | AVIBULB RIVET Ø 4.8 | 16 | | | | | | | |
| 16 | J022805000 | PANEL POSTERIOR CE6-41 | REAR PANEL CE6-41 | 1 | | | | | | | |
| | Q419005000 | REMACHE 4X8 ALMG3 / ALUMINIO | RIVET 4X8 ALMG3 / ALUMINIUM | 8 | | | | | | | |
| | Q221342000 | REMACHE EXAGONAL M5 | HEXAGONAL RIVET M5 | 2 | | | | | | | |
| | | | | | | | | | | | |
| | | | | | | | | | | | |
| | | | | | | | | | | | |
| | | | | | | | | | | | |
| | | | | | | | | | | | |
| | | | | | | | | | | | |
| | | | | | | | | | | | |
| | | | | | | | | | | | |
| | | | | | | | | | | | |

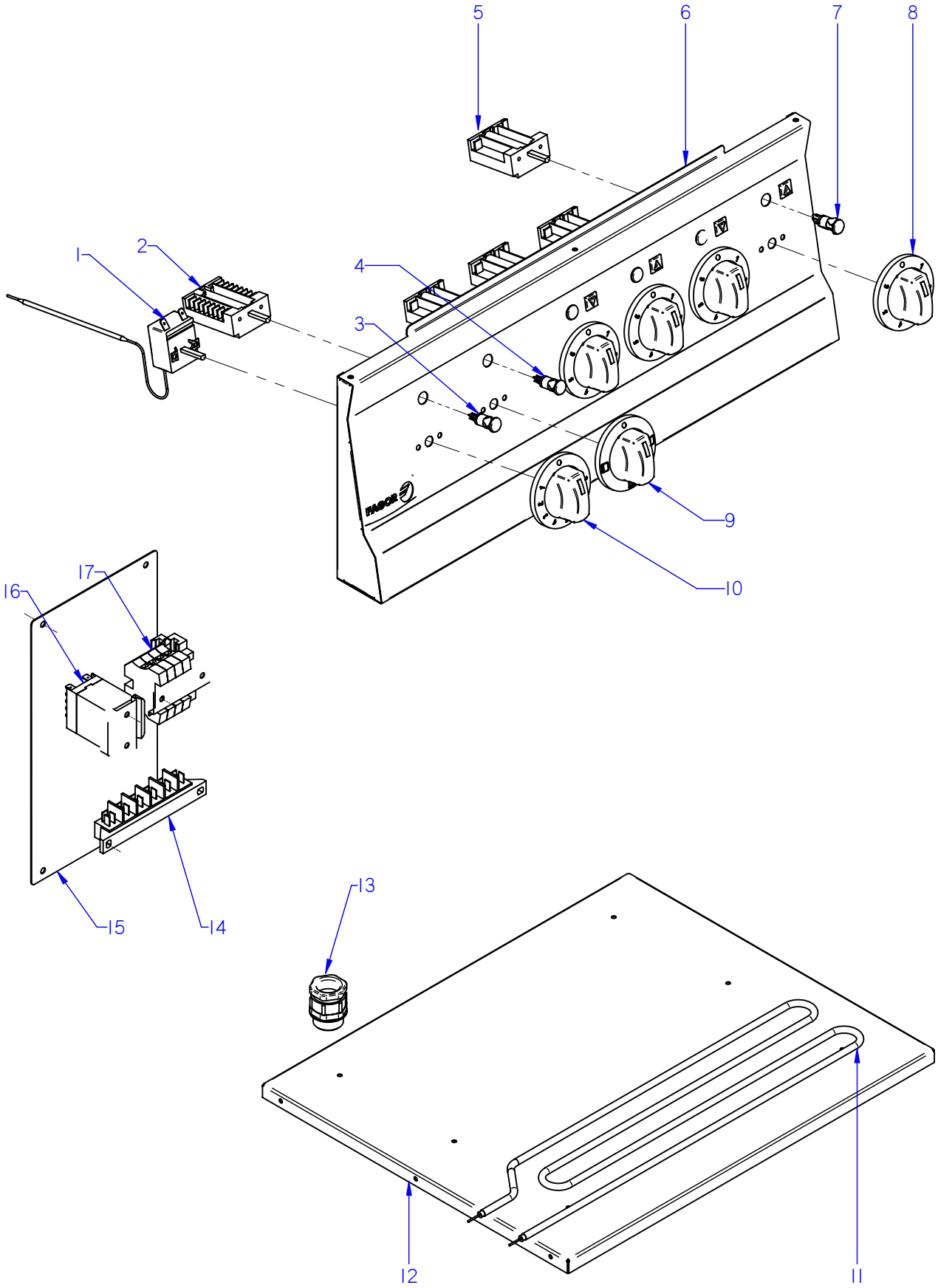


ITEM MARCADO EN COLOR = REPUESTO RECOMENDADO
COLOURED ITEM = RECOMMENDED SPARE PART

| N plano | Firma | Fecha | Aparato | CONJUNTO FUNCIONAL | Lamina | |
|---|---|---|---|---|---|---|
| C-2378 | | 2009-06 | COCINAS CE6-20 / 40 / 41 | | 3 | Fagor Industrial S.Coop. FAGOR Oñate |

| MOD. | COCINAS /RANGES | ZONA | CONJUNTO FUNCIONAL / FUNCTIONAL UNIT | PLANO | C-2378 |
|---|---|---|---|---|---|

| ITEM | CODIGO | DENOMINACION | TEXTO | CE6-20 | CE6-40 | CE6-41 | | | | | NOTAS |
|---|---|---|---|---|---|---|---|---|---|---|---|
| 1 | X153000000 | TERMOSTATO 50-310 C | THERMOSTAT 50-310 C | _ | _ | 1 | | | | | |
| | Q151320000 | TOR. ALOMADO M4X6 H.ZINCADO | CURVED SCREW M4X6 H. ZINC | _ | _ | 2 | | | | | |
| 2 | U673006000 | CONMUTADOR | SWITCH | _ | _ | 1 | | | | | |
| | Q151320000 | TOR. ALOMADO M4X6 H.ZINCADO | CURVED SCREW M4X6 H. ZINC | _ | _ | 2 | | | | | |
| 3 | R693055000 | PILOTO VERDE 41227000C7 | GREEN PILOT 41227000C7 | _ | _ | 1 | | | | | ELIMINADO 01.02.13 |
| 3 | 12047390 | PILOTO VERDE 230V AC 8KW 16MM | GREEN PILOT 230V AC 8KW 16M | _ | _ | 1 | | | | | INTRODUCIDO 01.02.13 |
| 4 | R693056000 | PILOTO AMBAR 41227000A4 | AMBER PILOT 41227000A4 | _ | _ | 1 | | | | | ELIMINADO 01.02.13 |
| 4 | 12024669 | PILOTO AMBAR Ø18 | AMBER PILOT Ø18 | _ | _ | 1 | | | | | INTRODUCIDO 01.02.13 |
| 5 | U673007000 | CONMUTADOR EGO | EGO SWITCH | 2 | 4 | 4 | | | | | |
| | Q151320000 | TOR. ALOMADO M4X6 H.ZINCADO | CURVED SCREW M4X6 H. ZINC | 4 | 8 | 8 | | | | | |
| 6 | J242802000 | PORTAMANDOS COMPL. CE6-20 | CONTROL HOLDER CE6-20 | 1 | _ | _ | | | | | |
| 6 | J242804000 | PORTAMANDOS COMPL. CE6-40 | CONTROL HOLDER CE6-40 | _ | 1 | _ | | | | | |
| 6 | J042803000 | PORTAMANDOS COMPL. CE6-41 | CONTROL HOLDER CE6-41 | _ | _ | 1 | | | | | |
| 7 | R693056000 | PILOTO AMBAR 41227000A4 | AMBER PILOT 41227000A4 | 2 | 4 | 4 | | | | | ELIMINADO 01.02.13 |
| 7 | 12024669 | PILOTO AMBAR Ø18 | AMBER PILOT Ø18 | 2 | 4 | 4 | | | | | INTRODUCIDO 01.02.13 |
| 8 | U952101000 | MANDO Ø6 CONMUTADOR-MESA | CONTROL Ø6 SWITCH-BENCH | 2 | 4 | 4 | | | | | |
| 9 | U952102000 | MANDO Ø6 CONMUTAD.-HORNO | CONTROL Ø6 SWITCH-OVEN | _ | _ | 1 | | | | | |
| 10 | X482101000 | MANDO Ø6 TERMOSTAO-HORNO | CONTROL Ø6 THERM. -OVEN | _ | _ | 1 | | | | | |
| 11 | J043002000 | RESISTENCIA 1000W-230V SNACK | RESISTOR 1000W-230V SNACK | _ | _ | 6 | | | | | |
| 12 | J042603000 | BASE RESISTENCIAS CE6-41 | SUPP. RESISTORS | _ | _ | 1 | | | | | |
| | Q419005000 | REMACHE 4X8 ALMG3 / ALUMINIO | RIVET 4X8 ALMG3 / ALUMINIUM | _ | _ | 8 | | | | | |
| 13 | R023013000 | PRENSA ESTOPAS PG-21 | STUFFING BOX PG-21 | 1 | 1 | 1 | | | | | |
| 14 | R253044000 | REGLETA AUXILIAR FV-122 | AUXILIARY TERMINAL STRIP FV- | 1 | 1 | 1 | | | | | |
| | Q152004000 | TORNIL. APLASTADO M5X13 A 304 | FLAT HEADED SCREW M5x13 A 3 | 2 | 2 | 4 | | | | | |
| 15 | J052805000 | TAPA POSTERIOR CE6-41 | REAR COVER CE6-41 | _ | _ | 1 | | | | | |
| | Q152004000 | TORNIL. APLASTADO M5X13 A 304 | FLAT HEADED SCREW M5x13 A 3 | _ | _ | 4 | | | | | |
| 16 | Z213007000 | CONTACTOR 230 V. 50-60 HZ | CONTACTOR 230 V. 50-60 HZ | _ | _ | 1 | | | | | |
| | Z123018000 | GUIA CONTACTOR L-55 | CONTACTOR GUIDE L-55 | _ | _ | 1 | | | | | |
| | Q419005000 | REMACHE 4X8 ALMG3 / ALUMINIO | RIVET 4X8 ALMG3 / ALUMINIUM | _ | _ | 2 | | | | | |
| | | | | | | | | | | | |
| | | | | | | | | | | | |

| MOD. | COCINAS /RANGES | ZONA | CONJUNTO FUNCIONAL / FUNCTIONAL UNIT | PLANO | C-2378 |
|---|---|---|---|---|---|

| ITEM | CODIGO | DENOMINACION | TEXTO | CE6-20 | CE6-40 | CE6-41 | | | | | NOTAS |
|---|---|---|---|---|---|---|---|---|---|---|---|
| 17 | P453025000 | BORNES 10 WDU-10203.O | TERMINALS 10 WDU-10203.O | 3 | 3 | 3 | | | | | |
| | P453026000 | BORNE TIER 10 WPE-10103.O | TERMINAL TIER 10 WPE-10103.O | 1 | 1 | 1 | | | | | |
| | Z263302000 | BORNA PASO AZUL | BLUE TAP TERMINAL | 1 | 1 | 1 | | | | | ELIMINADA 21.10.11 |
| | Z683097000 | BORNA NEUTRO AZUL 76A 16mm2 | BLUE NEUTRAL TERMINAL 76A | 1 | 1 | 1 | | | | | INTRODUC. 21.10.11 |
| | Z263303000 | TOPE FINAL | END STOP | 1 | 1 | 1 | | | | | |
| | Z103083000 | GUIA CONTACTOR L-73 " | CONTACTOR GUIDE L-73 " | 1 | 1 | 1 | | | | | |
| | Q419005000 | REMACHE 4X8 ALMG3 / ALUMINIO | RIVET 4X8 ALMG3 / ALUMINIUM | 2 | 2 | 2 | | | | | |

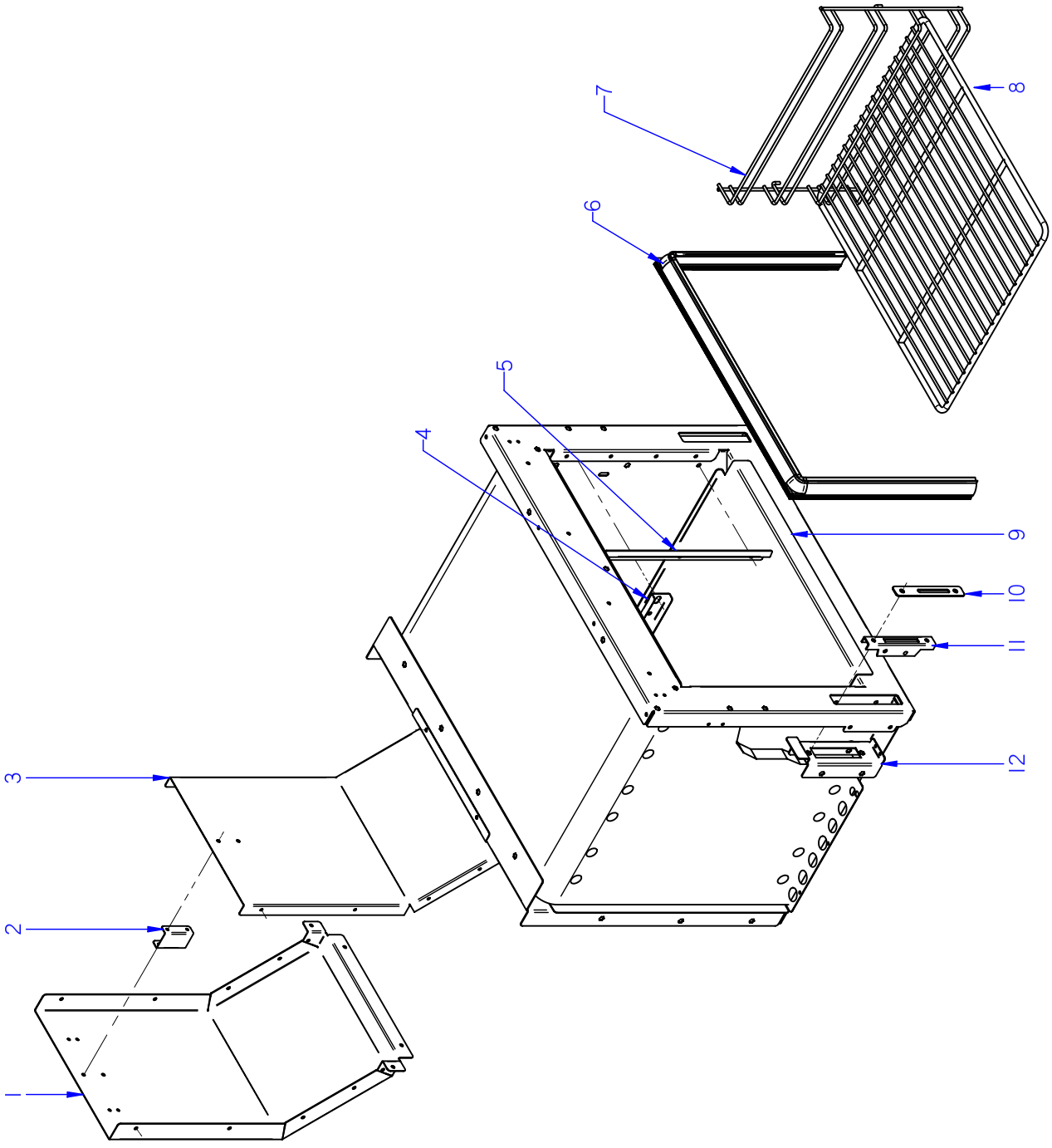


ITEM MARCADO EN COLOR = REPUESTO RECOMENDADO
COLOURED ITEM = RECOMMENDED SPARE PART

| N plano | Firma | Fecha | Aparato | | Lamina | |
|---|---|---|---|---|---|---|
| C-2379 | | 2009-06 | HORNO | COCINA CE6-41 | 4 | Fagor Industrial S.Coop. Oñate FAGOR |

| MOD. | COCINAS /RANGES | ZONA | HORNO / OVEN | PLANO | C-2379 |
|---|---|---|---|---|---|

| ITEM | CODIGO | DENOMINACION | TEXTO | CE6-41 | | | | | | | NOTAS |
|---|---|---|---|---|---|---|---|---|---|---|---|
| 1 | J022602000 | POSTERIOR CHIMENEA CG6-41 | REAR FLUEPIPE CG6-41 | 1 | | | | | | | |
| | Q419005000 | REMACHE 4X8 ALMG3 / ALUMINIO | RIVET 4X8 ALMG3 / ALUMINIUM | 4 | | | | | | | |
| 2 | J022608000 | SEPAR. CHIMENEA HORNO SNACK | SEPAR. OVEN FLUEPIPE SNACK | 1 | | | | | | | |
| | Q419005000 | REMACHE 4X8 ALMG3 / ALUMINIO | RIVET 4X8 ALMG3 / ALUMINIUM | 4 | | | | | | | |
| 3 | J022603000 | ANTERIOR CHIMENEA CG6-41 | FRONT FLUEPIPE CG6-41 | 1 | | | | | | | |
| | Q419005000 | REMACHE 4X8 ALMG3 / ALUMINIO | RIVET 4X8 ALMG3 / ALUMINIUM | 12 | | | | | | | |
| 4 | U055644000 | FIJACION BULBO | FASTENING BULB | 1 | | | | | | | |
| | Q412000000 | REMACHE TUBULAR 4x8 | TUBULAR RIVET 4x8 | 2 | | | | | | | |
| 5 | J045610000 | SUJECCION JUNTA PUERTA | DOOR SEAL FASTENING | 2 | | | | | | | |
| | Q012031000 | TORNILLO EXAGONAL M5x10 A304 | HEXAGONAL BOLT M5x10 A304 | 6 | | | | | | | |
| | Q302022000 | ARANDELA 16x6x1,2 A304 | WASHER 16x6x1.2 A304 | 6 | | | | | | | |
| 6 | J025610000 | JUNTA HORNO COMPL.SNACK | OVEN DOOR SEAL SNACK | 1 | | | | | | | |
| 7 | J045609000 | GUIA BANDEJAS HORNO SNACK | OVEN TRAY GUIDE SNACK | 2 | | | | | | | |
| 8 | J045613000 | PARRILLA DE HORNO SNACK | SNACK OVEN GRILLE | 1 | | | | | | | |
| 9 | J045608000 | SOLERA DE HORNO | OVEN FLOOR SNACK | 1 | | | | | | | ELIMINADA 02.11.2009 |
| 9 | J045614000 | SOLERA DE HORNO | OVEN FLOOR SNACK | 1 | | | | | | | INTRODUC. 02.11.2009 |
| 10 | J045612000 | EMBELLEC. GUIA BISAGRA SNACK | TRIM HINGE GUIDE SNACK | 4 | | | | | | | |
| | Q152045000 | TORNILLO AMARRE M6X25 | FASTENING BOLT M6X25 | 4 | | | | | | | |
| 11 | U010512000 | GUIA DE BISAGRA | HINGE GUIDE | 2 | | | | | | | ELIMINADA 12.12.11 |
| 11 | 12041846 | GUIA DE BISAGRA | HINGE GUIDE | 2 | | | | | | | INTRODUC. 12.12.11 |
| 12 | J042604000 | SOPORTE BISAGRA PUERTA | SUPPORT DOOR HINGE | 2 | | | | | | | |
| | Q221342000 | REMACHE EXAGONAL M5 | HEXAGONAL RIVET M5 | 4 | | | | | | | |
| | Q419005000 | REMACHE 4X8 ALMG3 / ALUMINIO | RIVET 4X8 ALMG3 / ALUMINIUM | 2 | | | | | | | |
| | Q012031000 | TORNILLO EXAGONAL M5X10 A304 | HEXAGONAL BOLT M5X10 A304 | 2 | | | | | | | |
| | Q302022000 | ARANDELA Ø16X6X1.2 A.304 | WASHER 16X6X1.2 A.304 | 5 | | | | | | | |
| | | | | | | | | | | | |
| | | | | | | | | | | | |
| | | | | | | | | | | | |
| | | | | | | | | | | | |
| | | | | | | | | | | | |
| | | | | | | | | | | | |

| MOD. | COCINAS /RANGES | ZONA | VARIOS / MISCELLANEOUS | PLANO | |
|---|---|---|---|---|---|

| ITEM | CODIGO | DENOMINACION | TEXTO | CE6-20 | CE6-40 | CE6-41 | | | | | NOTAS |
|---|---|---|---|---|---|---|---|---|---|---|---|
| | J036501000 | FOLLETO INSTRUCCIÓN. CE-600 | INSTRUCTION LEAFLE. CE-600 | 1 | 1 | 1 | | | | | |
| | J033004000 | ESQUEMA TEORICO ADH. CE6-20 | THEO. DIAGRAM LABELCE6-20 | 1 | _ | _ | | | | | HB-80553 |
| | J033005000 | ESQUEMA TEORICO ADH. CE6-40 | THEO. DIAGRAM LABELCE6-40 | _ | 1 | _ | | | | | HC-81207 |
| | U673001000 | ESQUEMA TEORICO ADH. CE6-41 | THEO. DIAGRAM LABELCE6-41 | _ | _ | 1 | | | | | HC-71190 |
| | J033007000 | PLANO DE MONTAJE CE6- | CE6- ASSEMBLY PLAN | 1 | 1 | 1 | | | | | HC-81209 |
| | U653003000 | CABLEADO PORTAM. MESA | CONTROL HOLDER WIRING TAB | 1 | _ | _ | | | | | |
| | U673009000 | CABLEADO BORNAS A CONMUT. | TERMINAL WIRING TO SWITCH | _ | 1 | 1 | | | | | |
| | U803010000 | CABLEADO A PLACA | WIRING TO PLATE | 2 | 4 | 4 | | | | | |
| | U803007000 | CABLEADO HORNO CE-741 | OVEN WIRING CE-741 | _ | _ | 1 | | | | | |
| | U803008000 | CABLEADO AUXILIAR CE-741 | AUX. WIRING CE-741 | _ | 1 | 1 | | | | | |

| MOD. | COCINAS /RANGES | ZONA | REPUESTOS RECOMENDADOS<br>RECOMMENDED SPARE PART | PLANO | |
|---|---|---|---|---|---|

| ITEM | CODIGO | DENOMINACION | TEXTO | CE6-20 | CE6-40 | CE6-41 | | | | | NOTAS |
|---|---|---|---|---|---|---|---|---|---|---|---|
| 4 | J033001000 | PLACA PUNTO ROJO 2000W-230V | RED POINT PLATE 2000W-230V | 2 | 3 | _ | | | | | C-2376 |
| 5 | U803002000 | PLACA PUNTO ROJO 1500W-230V | RED POINT PLATE 500W-230V | _ | 1 | _ | | | | | C-2376 |
| 4 | J033001000 | PLACA PUNTO ROJO 2000W-230V | RED POINT PLATE 2000W-230V | _ | _ | 3 | | | | | C-2377 |
| 5 | U803002000 | PLACA PUNTO ROJO 1500W-230V | RED POINT PLATE 500W-230V | _ | _ | 1 | | | | | C-2377 |
| 12 | U020528000 | BISAGRA CIERRE HORNO | OVEN LOCK HINGE | _ | _ | 2 | | | | | C-2377 |
| 1 | X153000000 | TERMOSTATO 50-310 C | THERMOSTAT 50-310 C | _ | _ | 1 | | | | | C-2378 |
| 2 | U673006000 | CONMUTADOR | SWITCH | _ | _ | 1 | | | | | C-2378 |
| 3 | 12047390 | PILOTO VERDE 230V AC 8KW 16MM | GREEN PILOT 230V AC 8KW 16MI | _ | _ | 1 | | | | | C-2378 |
| 4 | 12024669 | PILOTO AMBAR Ø18 | AMBER PILOT Ø18 | _ | _ | 1 | | | | | C-2378 |
| 5 | U673007000 | CONMUTADOR EGO | EGO SWITCH | 2 | 4 | 4 | | | | | C-2378 |
| 7 | 12024669 | PILOTO AMBAR Ø18 | AMBER PILOT Ø18 | 2 | 4 | 4 | | | | | C-2378 |
| 11 | J043002000 | RESISTENCIA 1000W-230V SNACK | RESISTOR 1000W-230V SNACK | _ | _ | 6 | | | | | C-2378 |
| 6 | J025610000 | JUNTA HORNO COMPL.SNACK | OVEN DOOR SEAL SNACK | _ | _ | 1 | | | | | C-2379 |
| 11 | 12041846 | GUIA DE BISAGRA | HINGE GUIDE | _ | _ | 2 | | | | | C-2379 |

# CE6-20

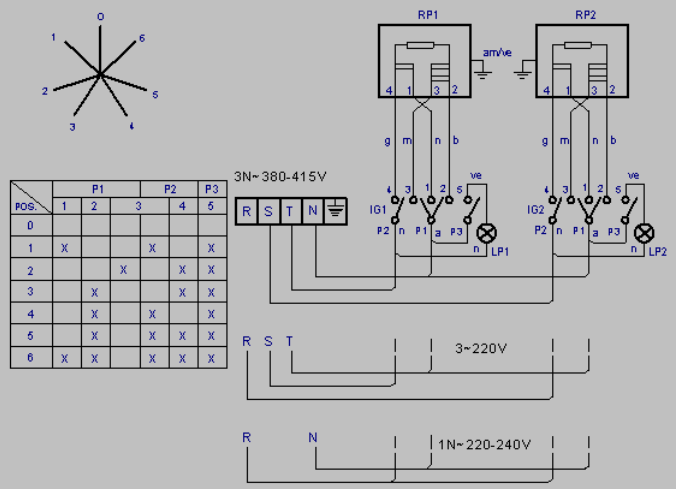


| POS. | P1 | P2 | P3 | | | |
|---|---|---|---|---|---|---|
| | 1 | 2 | 3 | 4 | 5 | 6 |
| 0 | | | | | | |
| 1 | X | | | X | | X |
| 2 | | | X | | X | X |
| 3 | | X | | | X | X |
| 4 | | X | | X | | X |
| 5 | | X | | X | X | X |
| 6 | X | X | | X | X | X |

m = marron-brown
g = gris-grey
n = negro-black
a = azul-blue
b = blanco-white
ve = verde-green
am/ve = amarillo/verde-yellow/green

| - | Theoretical diagram: CE6-20 | - | - | J033004000 | - |
|---|---|---|---|---|---|
| Zk./Nº | Pieza | Cant. | Materiala/Material | Klas. zk/Nº Clas. | Gainazal akabera/Tratamiento |

| Zk./Nº | Aldaketa/Modificaciones | Nork proposatua/Propuesta de | Data/Fecha |
|---|---|---|---|
| - | - | - | - |
| - | - | - | - |
| - | - | - | - |
| - | - | - | - |
| - | - | - | - |

Perdoi orokorrak
Tolerancias generales

< 5 ± 0.2 | 5 ÷ 25 ± 0.4 | 25 ÷ 50 ± 0.6 | 50 ÷ 100 ± 0.8 | >100± 1 | α ± 1

| | Sinadura/Firma | Data/Fecha |
|---|---|---|
| Marraztua/Dibujado | e.carrascal | 2008-11-25 |
| Proiektatua/Proyectado | e.carrascal | 2008-11-25 |
| Egiaztatua/Comprobado | l.alberdi | 2008-11-25 |

FAGOR
Fagor Industrial,Koop.Elk, Mugatua

Gainazal perdoia
Mecanizado superficial
—

Eskala/Escala
-

# COOKING

Plano Zk./Plano Nº
HB-80553

- Zk. ord. du
- Zk.gaitik ord.

Plano hau ezin daiteke erabili, ez berriztatu, gure baimenik gabe.

# CE6-40

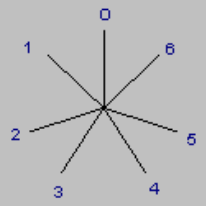


| POS. | P1 | | | P2 | | P3 |
|---|---|---|---|---|---|---|
| | 1 | 2 | 3 | | 4 | 5 |
| 0 | | | | | | |
| 1 | X | | | X | | X |
| 2 | | | X | | X | X |
| 3 | | X | | | X | X |
| 4 | | X | | X | | X |
| 5 | | X | | X | X | X |
| 6 | X | X | | X | X | X |

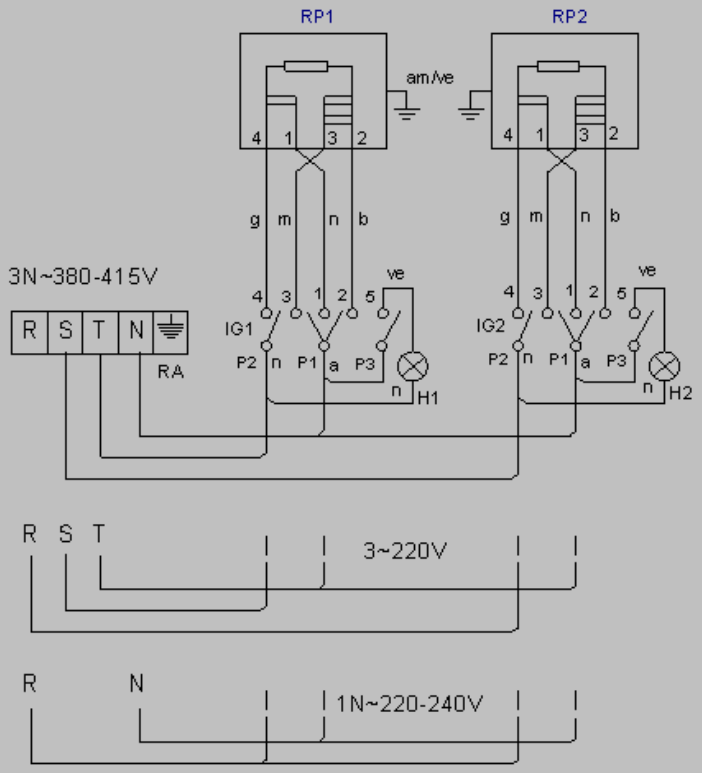


m = marron-brown

g = gris-grey

n = negro-black

a = azul-blue

b = blanco-white

ve = verde-green

am/ve = amarillo/verde-yellow/green

HP1, HP2: Lámpara Calentamiento de Placas/Heating lamps

IG1, IG2: Conmutadores de placas eléctricas/Main switch (elect

RP1, RP2: Placas eléctricas/Electrical plates

| | | | | | |
|---|---|---|---|---|---|
| - | Theoretical diagram: CE6-40 | - | - | J033005000 | - |
| Zk./Nº | Pieza | Cant. | Materiala/Material | Klas. zk/Nº Clas. | Gainazal akabera/Tratamiento |
| Zk./Nº | Aldaketa/Modificaciones | | Nork proposatua/Propuesta de | Data/Fecha | Perdol orokorrak<br>Tolerancias generales |
| - | - | | - | - | |
| - | - | | - | - | < 5 ± 0.2 / 50 ÷ 100 ± 0.8 |
| - | - | | - | - | 5 ÷ 25 ± 0.4 / >100± 1 |
| - | - | | - | - | 25 ÷ 50 ± 0.6 / α ± 1 |
| - | - | | - | - | |

| | Sinadura/Firma | Data/Fecha |
|---|---|---|
| Marraztua/Dibujado | e.carrancal | 2008-11-21 |
| Proiektatua/Proyectado | e.carrancal | 2008-11-21 |
| Egiaztatua/Comprobado | [signature] | 2008-11-21 |

FAGOR

Fagor Industrial, Koop. Elk, Mugatua

Gainazal perdola
Mecanizado superficial

—

Eskala/Escala

-

**COOKING**

Plano Zk./Plano Nº
HC-81207

- Zk. ord. du

Plano hau ezin daiteke erabili, ez berriztatu, gure baimenik gabe.

- Zk. gaitik ord.

# CE 941 CE 741 CE 641

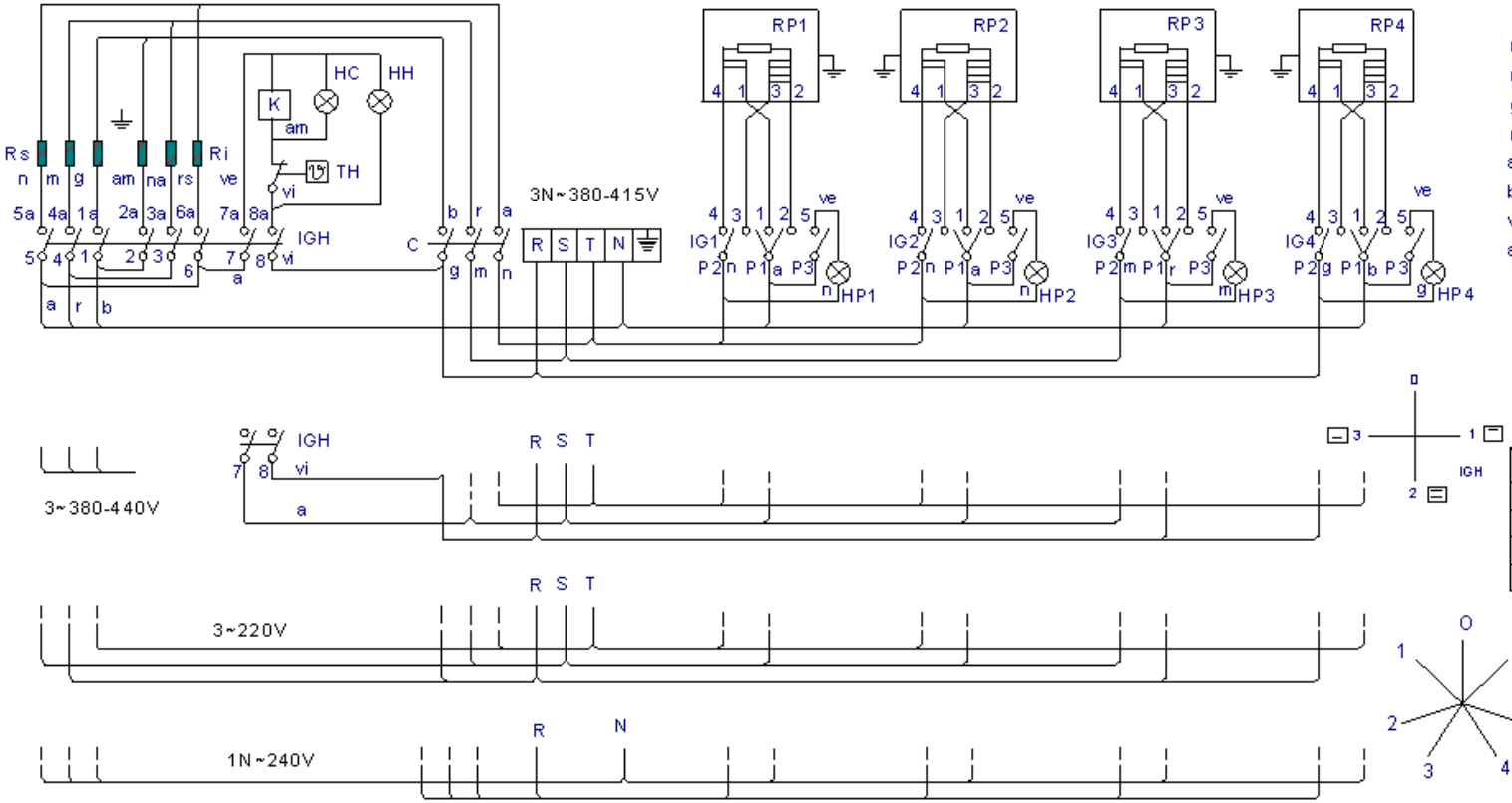


r = rojo-red-rouge
m = marron-brown-marron
g = gris-grey-gris
n = negro-black-noir
a = azul-blue-bleu
b = blanco-white-blanc
vi = violeta-violette-violet
am = amarillo-yellow-jaune
na = naranja-orange-orange
rs = rosa-rose-pink
ve = verde-green-vert
am/ve = amarillo/verde-yellow/green-jaune/vert




| | 1_2 1a | 2a | 3_4 3a | 4a | 5_6 5a | 6a | 7 7a | 8 8a |
|---|---|---|---|---|---|---|---|---|
| 0 | | | | | | | | |
| 1 | X | | | X | X | | X | X |
| 2 | X | X | X | X | X | X | X | X |
| 3 | | X | X | | | X | X | X |

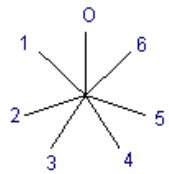


| IG POS. | P1 1 | 2 | 3 | P2 4 | P3 5 |
|---|---|---|---|---|---|
| 0 | | | | | |
| 1 | X | | | X | X |
| 2 | | | X | X | X |
| 3 | | X | | X | X |
| 4 | | X | X | | X |
| 5 | | X | X | X | X |
| 6 | X | X | X | X | X |

HPx: Lampara Calentamiento Placas / Heating lamp (electrical plates)
IGx: Conmutadores de placas electricas / Main switch (electrical plates)
IGH: Conmutador General Horno / Oven main switch
HH: Lampara Horno Encendido / Main lamp (oven)
HC: Lampara Calentamiento Horno / Heating lamp (oven)
Ri: Resistencia Horno Inferior / Lower resistance (oven)
Rs: Resistencia Horno Superior / Top resistance (oven)
RPx: Placas electricas / Electrical plates
BH: Termostato de Horno / Thermostat (oven)
TFR: Transformador / Transformer
K: Contactor / Contactor

U673001000

| | | | | | | |
|---|---|---|---|---|---|---|
| | Esquema teorico adhesivo | | | U-673001 | | |
| N° | Pieza | Cant. | Material | N° Clasificacion | Acabado | |
| N° | Modificacion | | Propuesta de | Fecha | Tolerancias generales | |
| | | | | | <5± | 50-100± : |
| | | | | | 5-25± : | >100± |
| | | | | | 25-50± : | <X± |

| | Firma | Fecha |
|---|---|---|
| Dibujado | Implazaola | 31.05.05 |
| Proyectado | | |
| Comprobado | Leto g | |

FAGOR
Fagor Industrial, Koop.Ek, Mugatua

Mecanizado superficial

Escala 1/1

COCINAS

Plano numero HC-71190

Sustituye al N°

Sustituido por

Plano hauez dalieke erabilez herriz lagure hairrentz gabe

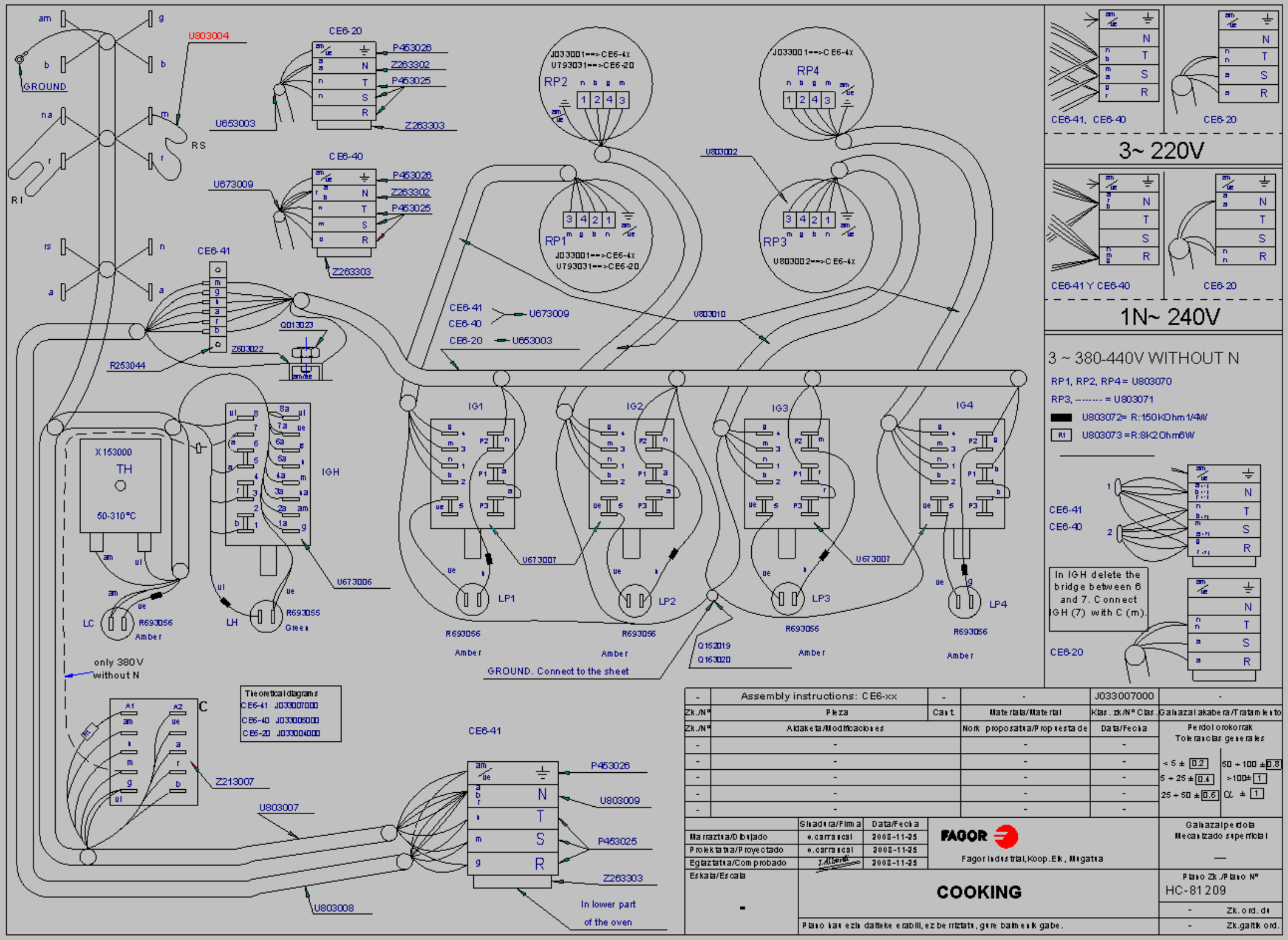


| | | | | | |
|---|---|---|---|---|---|
| - | Assembly instructions: CE6-xx | - | - | J033007000 | - |
| Zk./Nº | Pieza | Cant. | Materiala/Material | Klas. zk/Nº Clas. | Gainazal akabera/Tratamiento |
| Zk./Nº | Aldaketa/Modificaciones | | Nork proposatua/Propuestade | Data/Fecha | Perdol orokorrak Tolerancias generales |
| - | - | | - | - | |
| - | - | | - | - | < 5 ± 0.2 / 50 ÷ 100 ± 0.8 |
| - | - | | - | - | 5 ÷ 25 ± 0.4 / >100± 1 |
| - | - | | - | - | 25 ÷ 50 ± 0.6 / α ± 1 |
| - | - | | - | - | |

| | Sinadura/Firma | Data/Fecha |
|---|---|---|
| Marraztua/Dibujado | e.carrancal | 2008-11-25 |
| Proiektatua/Proyectado | e.carrancal | 2008-11-25 |
| Egiaztatua/Comprobado | [signature] | 2008-11-25 |

FAGOR

Fagor Industrial, Koop. Elk., Mugatua

Gainazal perdola
Mecanizado superficial
—

Eskala/Escala
-

# COOKING

Plano Zk./Plano Nº
HC-81209

- Zk. ord. du
- Zk. gaitik ord.

Plano hau ezin daiteke erabili, ez berriztatu, gure baimenik gabe.