DESPIECE TECNICO

Cocinas a gas todo plancha
Gas ranges with solid top
Fourneaux plaque coup de feu à gaz
Gas-herde mit glühplatte
Cucine tuttapiastra a gas
Fogão a gás todo em placa

GAMA 700

Modelos:

CG7-10
CG7-11

Mayo 2008 May

Revisado Mayo 2014 May Revised

FAGOR

FAGOR INDUSTRIAL

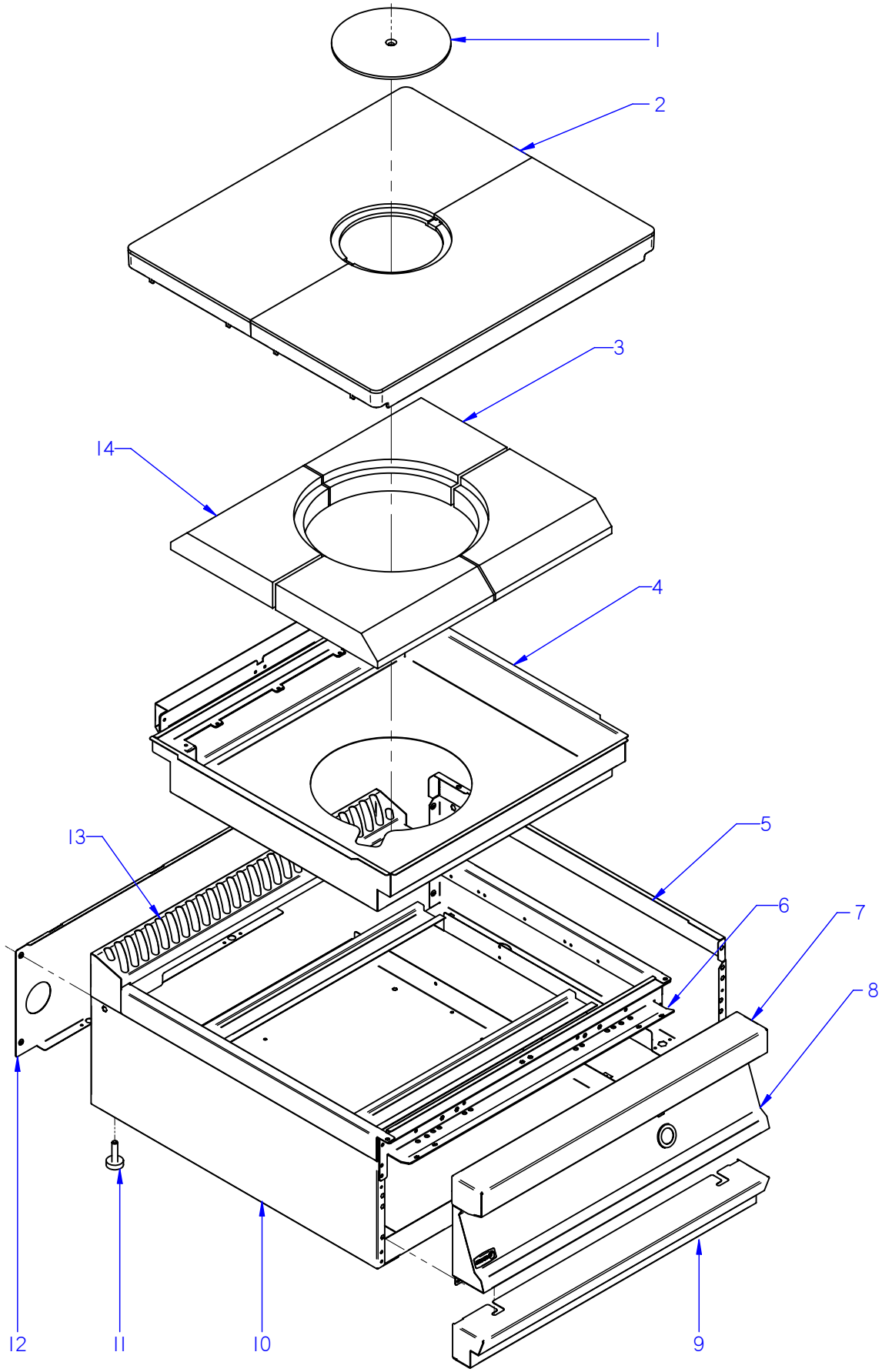

ITEM MARCADO EN COLOR = REPUESTO RECOMENDADO
COLOURED ITEM = RECOMMENDED SPARE PART

N plano	Firma	Fecha	Aparato	MUEBLE	Lamina	
C-2065		2008-05	COCINA CG7-10		1	Fagor Industrial S.Coop. FAGOR Oñate

MOD.	COCINAS	ZONA	MUEBLE	PLANO	C-2065

ITEM	CODIGO	DENOMINACION	TEXTO	CG7-10							NOTAS
1	U195421000	RODELA	GUIDE RING	1							
2	U945401000	MEDIA PLACA 1M G700	MEDIUM PLATE 1M G700	2							
3	U772612000	REFRACTARIO DERECHO	RIGHT REFRACTORY	2							
4	U772601000	CAJON DE REFRACTARIO CG-700	REFRACTORY DRAWER CG-700	1							ELIMINADO 01.06.11
4	U772602000	CAJON DE REFRACTARIO	REFRACTORY DRAWER	1							ELIMINADO 31.10.11
4	12041218	CAJON REFRACTARIO MEK	MEK REFRACTORY DRAWER	1							INTRODUCIDO 31.10.11
S/Nº	U772603000	REFUERZO CAJON REFRACTARIO	REFRAC. REINFORCED DRAWER	1							
5	H122802000	PANEL LATERAL SUP. DCHO. G700	RIGHT SUP. SIDE PANEL G700	1							
	Q221342000	REMACHE EXAGONAL M5	HEXAGONAL RIVET M5	5							
	Q221343000	REMACHE EXAGONAL M6	HEXAGONAL RIVET M6	5							SISTEMA PUENTE
6	H602603000	ESCUADRA AMARRE ANTER. 1 M	FRONT FASTENING BRACKET 1	1							
	Q221342000	REMACHE EXAGONAL M5	HEXAGONAL RIVET M5	6							
	Q012031000	TORNILLO EXAGONAL M5X10 A.304	HEXAGONAL BOLT M5X10 A.304	3							
7	H125409000	ANTERIOR MESA 1M G-700	FRONT BENCH 1M G-700	1							
	Q152004000	TORNIL. APLASTADO M5X13 A 304	FLAT HEADED SCREW M5x13 A 3	2							
8	U942803000	PANEL PORTAMANDOS CG7-10	CONTROL HOLDER PANEL CG7-	1							
	Q221343000	REMACHE EXAGONAL M6	HEXAGONAL RIVET M6	6							SISTEMA PUENTE
	Q151336000	TORNILLO SOPORTE GUIAS	GUIDE SUPPORT BOLT	2							
	Q152004000	TORNIL. APLASTADO M5X13 A 304	FLAT HEADED SCREW M5x13 A 3	4							
	U912805000	ESCUDO FAGOR G700	FAGOR EMBLEM G700	1							
	Q221023000	CLIP SUJECIÓN RÁPIDA Ø5	RAPID CONNECT CLIP Ø5	2							
9	H602816000	ZOCALO 7-10 Q	SKIRTING 7-10 Q	1							
	Q012031000	TORNILLO EXAGONAL M5X10 A.304	HEXAGONAL BOLT M5X10 A.304	2							
	Q302022000	ARANDELA 16X6X1.2 A.304	WASHER 16X6X1.2 A.304	2							
	Q162040000	TUERCA EXAGONAL M6	HEXAGONAL NUT M6	2							
	Q302022000	ARANDELA 16X6X1.2 A.304	WASHER 16X6X1.2 A.304	2							
10	H122801000	PANEL LATERAL SUP. IZDO. G700	LEFT UPPER SIDE PANEL G700	1							
	Q221342000	REMACHE EXAGONAL M5	HEXAGONAL RIVET M5	5							
	Q221343000	REMACHE EXAGONAL M6	HEXAGONAL RIVET M6	5							SISTEMA PUENTE
11	Z200107000	PATA REGULABLE	ADJUSTABLE LEG	4							
	Q221345000	REMACHE EXAGONAL M10	HEXAGONAL RIVET M10	4							

MOD.	COCINAS	ZONA	MUEBLE	PLANO	C-2065

ITEM	CODIGO	DENOMINACION	TEXTO	CG7-10							NOTAS
12	H602808000	PANEL POSTERIOR SUP. G700 1M	SUP REAR PANEL G700 1M	1							
	Q419005000	REMACHE 4X8 ALMG3 / ALUMINIO	RIVET 4X8 ALMG3 / ALUMINIUM	4							
	X010503000	CIERRE MUELLE	LOCK SPRING	3							
	Q419007000	REMACHE TUBULAR C/V D3.2X6	TUBULAR RIVET C/V D3.2X6	6							
13	S565401000	EMBELLECEDOR POSTERIOR 1M	REAR TRIM 1M	1							
14	U772611000	REFRACTARIO IZQUIERDO	LEFT REFRACTORY	2							

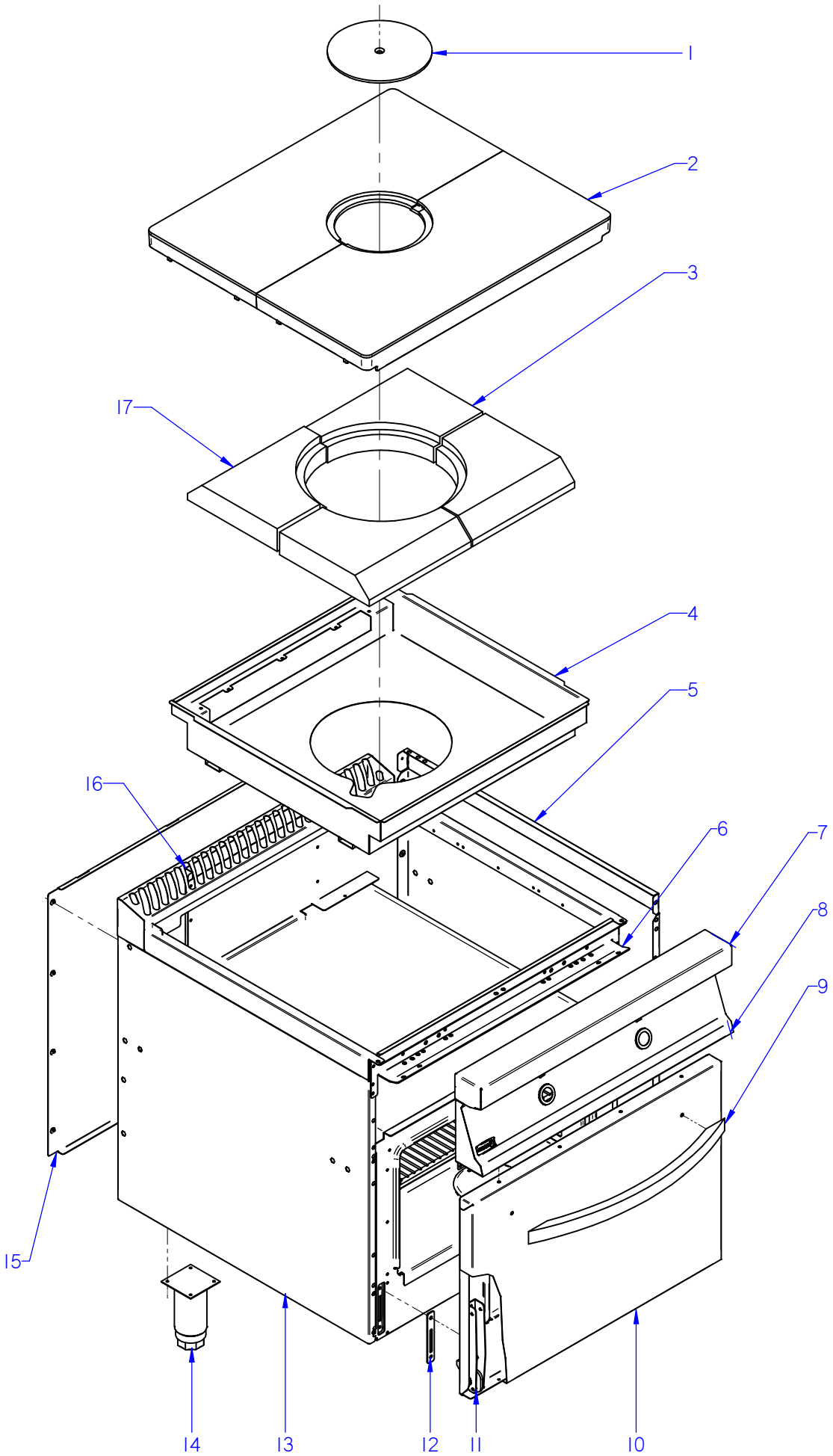

ITEM MARCADO EN COLOR = REPUESTO RECOMENDADO
COLOURED ITEM = RECOMMENDED SPARE PART

N plano	Firma	Fecha	Aparato	MUEBLE	Lamina	
C-2066		2008-05	COCINA CG7-11		2	Fagor Industrial S.Coop. FAGOR Onate

MOD.	COCINAS	ZONA	MUEBLE	PLANO	C-2066

ITEM	CODIGO	DENOMINACION	TEXTO	CG7-11							NOTAS
1	U195421000	RODELA	GUIDE RING	1							
2	U945401000	MEDIA PLACA 1M G700	MEDIUM PLATE 1M G700	2							
3	U772612000	REFRACTARIO DERECHO	RIGHT REFRACTORY	2							
4	U772601000	CAJON DE REFRACTARIO CG-700	REFRACTORY DRAWER CG-700	1							ELIMINADO 01.06.11
4	U772602000	CAJON DE REFRACTARIO	REFRACTORY DRAWER	1							ELIMINADO 31.10.11
4	12041218	CAJON REFRACTARIO MEK	MEK REFRACTORY DRAWER	1							INTRODUCIDO 31.10.11
S/Nº	U772603000	REFUERZO CAJON REFRACTARIO	REFRAC. REINFORCED DRAWER	1							INTRODUCIDO 01.06.11
5	U912802000	PANEL LATERAL DCHO. G700	RIGHT SIDE PANEL G700	1							
	Q221342000	REMACHE EXAGONAL M5	HEXAGONAL RIVET M5	4							
	Q221343000	REMACHE EXAGONAL M6	HEXAGONAL RIVET M6	4							
	Q221343000	REMACHE EXAGONAL M6	HEXAGONAL RIVET M6	7							SISTEMA PUENTE
	Q012043000	TORNILL. EXAGONAL M6X20 A.304	HEXAGONAL BOLT M6X10 A.304	2							
	Q302022000	ARANDELA 16X6X1.2 A.304	WASHER 16X6X1.2 A.304	2							
6	H602603000	ESCUADRA AMARRE ANTER. 1 M	FRONT FASTENING BRACKET 1 I	1							
	Q012031000	TORNILLO EXAGONAL M5X10 A.304	HEXAGONAL BOLT M5X10 A.304	3							
7	H125409000	ANTERIOR MESA 1M G-700	FRONT BENCH 1M G-700	1							
	Q152004000	TORNIL. APLASTADO M5X13 A 304	FLAT HEADED SCREW M5x13 A 3	2							
8	U942801000	PANEL PORTAMANDOS CG7-11	CONTROL HOLDER PANEL CG7-	1							
	Q221343000	REMACHE EXAGONAL M6	HEXAGONAL RIVET M6	6							SISTEMA PUENTE
	Q152004000	TORNIL. APLASTADO M5X13 A 304	FLAT HEADED SCREW M5x13 A 3	4							
	U912805000	ESCUDO FAGOR G700	FAGOR EMBLEM G700	1							
	Q221023000	CLIP SUJECIÓN RÁPIDA Ø5	RAPID CONNECT CLIP Ø5	2							
9	U020504000	ASA DE HORNO COMPL. G 900	COMPL. OVEN HANDLE G 900	1							
	Q302022000	ARANDELA 16X6X1.2 A.304	WASHER 16X6X1.2 A.304	2							
	Q012041000	TORNILLO EXAGONAL M6X10 A.304	HEXAGONAL BOLT M6X10 A.304	2							
	Q162040000	TUERCA EXAGONAL M6	HEXAGONAL NUT M6	2							
	12038310	**KIT PUERTA HORNO**	**OVEN DOOR KIT**	**1**							
10	U910501000	PUERTA DE HORNO G700	OVEN DOOR G700	1							
	U910502000	CONTRAPUERTA HORNO G700	OVEN DOOR REVERSE G700	1							
	Q152004000	TORNIL. APLASTADO M5X13 A 304	FLAT HEADED SCREW M5x13 A 3	3							
	X160537000	TAPON PUERTAS	DOOR COVER	1							

MOD.	COCINAS	ZONA	MUEBLE	PLANO	C-2066

ITEM	CODIGO	DENOMINACION	TEXTO	CG7-11							NOTAS
11	U020528000	BISAGRA CIERRE HORNO	OVEN LOCK HINGE	2							
	Q152022000	TORNILLO M.6X8	BOLT M.6X8	6							
12	U915619000	EMBELLECEDOR GUIA BISAGRA	HINGE GUIDE TRIM	2							
	Q152045000	TORNILLO AMARRRE M6X25	FASTENING BOLT M6X25	4							
13	U912801000	PANEL LATERAL IZDO. G700	LEFT SIDE PANEL G700	1							
	Q221342000	REMACHE EXAGONAL M5	HEXAGONAL RIVET M5	13							
	Q221343000	REMACHE EXAGONAL M6	HEXAGONAL RIVET M6	2							
	Q012043000	TORNILL. EXAGONAL M6X20 A.304	HEXAGONAL BOLT M6X10 A.304	2							
	Q302022000	ARANDELA 16X6X1.2 A.304	WASHER 16X6X1.2 A.304	2							
	Q221343000	REMACHE EXAGONAL M6	HEXAGONAL RIVET M6	7							SISTEMA PUENTE
14	X260151000	PATA REGULABLE	ADJUSTABLE LEG	4							
	Q411304000	REMACHE AVIBULB Ø 4,8	AVIBULB RIVET Ø 4.8	16							
15	S562805000	PANEL POSTERIOR G750	REAR PANEL G750	1							
	Q419005000	REMACHE 4X8 ALMG3 / ALUMINIO	RIVET 4X8 ALMG3 / ALUMINIUM	8							
16	S565401000	EMBELLECEDOR POSTERIOR 1M	REAR TRIM 1M	1							
17	U772611000	REFRACTARIO IZQUIERDO	LEFT REFRACTORY	2							

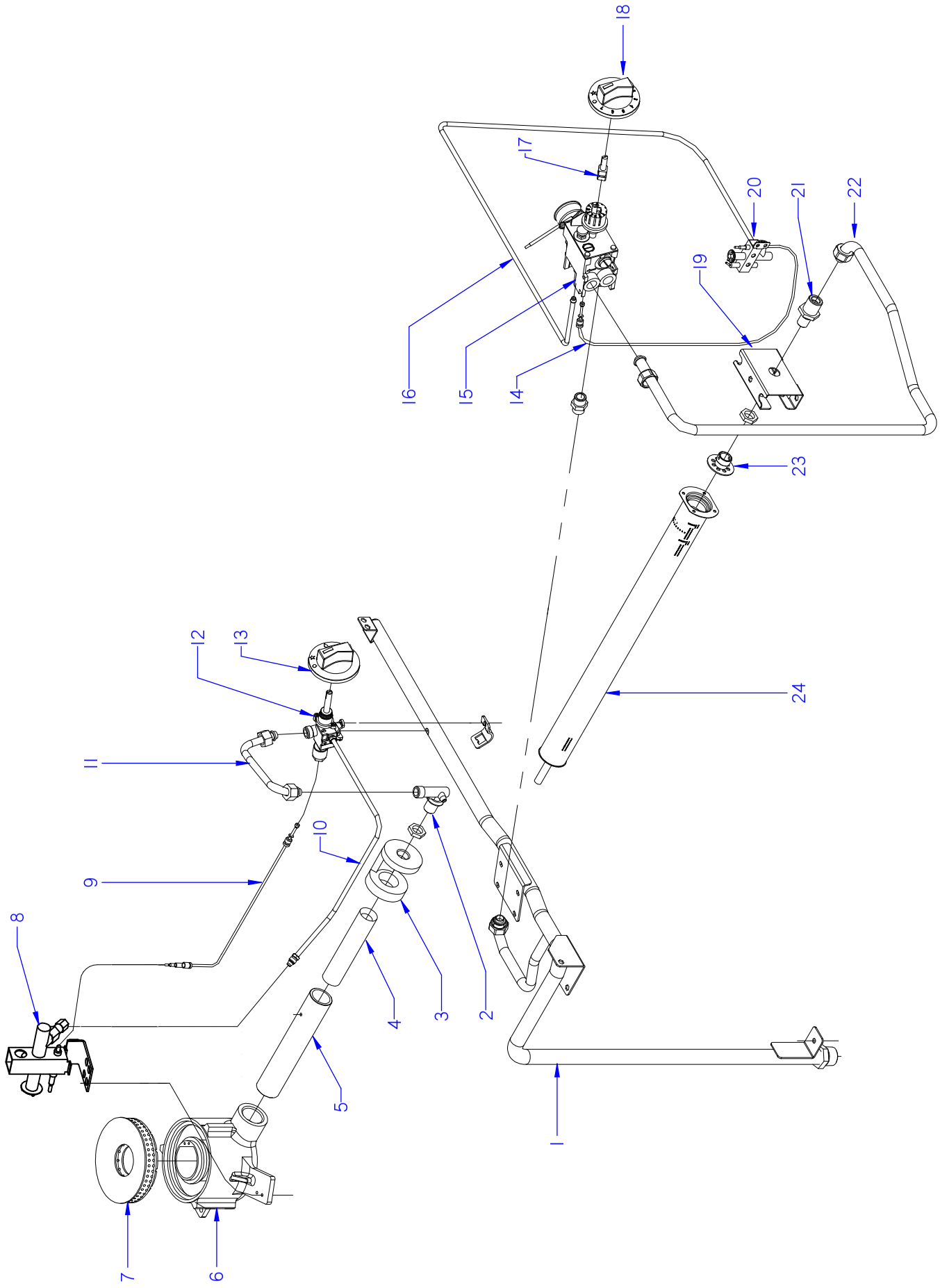

ITEM MARCADO EN COLOR = REPUESTO RECOMENDADO
COLOURED ITEM = RECOMMENDED SPARE PART

N plano	Firma	Fecha	Aparato	Lamina	
c-2067		2008-05	PARTE FUNCIONAL DE GAS COCINAS CG7-10 / CG7-11	3	Fagor Industrial S.Coop. FAGOR Onate

MOD.	COCINAS	ZONA	PARTE FUNCIONAL DE GAS	PLANO	C-2067

ITEM	CODIGO	DENOMINACION	TEXTO	CG7-10	CG7-11						NOTAS
1	U945013000	CONDUCCION GENERAL CG-710	GENERAL PIPING CG-710	1	_						
1	U945001000	COND GRAL COMP CG7-11	GENER. PIPING CG7-11	_	1						ELIMINADO 01.02.12
1	12041825	CONDUCCION COMPL. CG 7-11	FULL PIPING CG 7-11	_	1						INTRODUCIDO 01.02.12
	Q152004000	TORNIL. APLASTADO M5X13 A 304	FLAT HEADED SCREW M5x13 A 3	4	2						
	Q221321000	REMACHE ROSCAD. NUTSERT M6	THREADED RIVET NUTSERT M6	_	2						
	Q221342000	REMACHE EXAGONAL M5	HEXAGONAL RIVET M5	_	2						
	Q012043000	TORNILLO EXAGONAL M6X20 A304	HEXAGONAL BOLT M6x20 A304	_	1						
	Q302022000	ARANDELA Ø16X6X1.2 A.304	WASHER 16X6X1.2 A.304	_	1						
2	U915014000	PORTATOBERAS HORNO	OVEN NOZZLE HOLDER	1	1						
	Q153002000	TORNILLO TAPON	CAP BOLT	1	1						
3	U615705000	CAMARA MEZCLA PINTADA	PAINT MIXING CHAMBER	1	1						
4	U775701000	VENTURI QUEMADOR	VENTURI BURNER	1	1						
	U052401000	TOBERA DE Ø 1.45 B.P.	NOZZLE Ø 1.45 B.P.	1	1						
	U262400000	TOBERA DE Ø 2,15 G.N.	NOZZLE Ø 2.15 G.N.	1	1						
5	U775700000	TUBO MEZCLADOR	MIXING PIPE	1	1						
	Q012031000	TORNILLO EXAGONAL M5X10 A.304	HEXAGONAL BOLT M5X10 A.304	1	1						
6	U195702000	CUERPO QUEMADADOR MECAN.	MECHAN BURNER BODY	1	1						
7	U195701500	QUEMADOR 10850 AGUJ. PINTADO	BURNER 10850 NEEDLE PAINTED	1	1						ELIMINADO 10.06.13
7	12091667	QUEMADOR 11,5 KW AGUJ. PINTAD	BURNER 11,5 KW PAINTED	1	1						INTRODUCIDO 10.06.13
8	R202100000	CONJUNTO SOP. PILOTO COMP.	COMP. PILOT SUPP. UNIT	1	1						
	U442137000	INYECTOR Ø 0.4 GN	INJECTOR Ø 0.4 GN.	1	1						
	Q012031000	TORNILLO EXAGONAL M5X10 A.304	HEXAGONAL BOLT M5X10 A.304	2	2						
9	U222130000	TERMOPAR L=600	THERMOCOUPLE L=600	1	1						
10	U945007000	TUBO PILOTO COMPL CG-710/711	COMPL PILOT PIPE CG-710/711	1	1						
11	U945004000	CONDUCCION QUEMADOR CG-711	BURNER PIPE CG-711	1	1						
	Q306062000	ARANDELA Ø13,9X10,33x1,5	WASHER Ø13.9X10.33x1.5	2	2						
12	U942102000	GRIFO 18700 BY-PASS 1,20	TAP 18700 BY-PASS 1.20	1	1						
13	H122101000	BOTON DE MANDO Ø8 G700	CONTROL BUTTON Ø8 G700	1	1						
14	U742131000	TERMOPAR L=1500 M9	THERMOCOUPLE L=1500 M9	_	1						

MOD.	COCINAS	ZONA	PARTE FUNCIONAL DE GAS	PLANO	C-2067

ITEM	CODIGO	DENOMINACION	TEXTO	CG7-10	CG7-11						NOTAS
15	T982100000	VALVULA 630 EUR 630.343	VALVE 630 EUR 630.343	_	1						ELIMINADO 01.10.10
15	R152102000	VALVULA 630 EUR 630.345	VALVE 630 EUR 630.345	_	1						INTRODUCIDO 01.10.10
	T982102000	TAPON 3/8 972.061	CAP 3/8 972.061	_	2						
	U875017000	MANGUITO R 3/8"-R1/2"	HOSE R 3/8"-R1/2"	_	2						
	Q306058000	ARANDELA Ø23,5X17,60X1,5	WASHER Ø23.5X17.60X1.5	_	2						
16	U945009000	TUBO PILOTO HORNO CG-711	OVEN PILOT PIPE CG -711	_	1						ELIMINADO 01.02.12
16	12041534	TUBO PILOTO HORNO CG 7-11	OVEN PILOT PIPE CG -711	_	1						INTRODUCIDO 01.02.12
17	R062101000	EJE BOTON DE MANDO EUROSIT	CONTROL BUTTON SHAFT EUR.	_	1						ELIMINADO 01.10.10
17	R062102000	EJE BOTON MANDO EUROSIT META	CONT. BUTTON SHAFT EUR.MET	_	1						ELIMINADO 01.02.12
17	12041835	EJE LARGO ELECTROVALVULA	LONG SOLENOID SHAFT	_	1						INTRODUCIDO 01.02.12
	Q131560000	VARILLA ROSCADA M4x8 DIN913	THREADED ROD M4x8 DIN913	_	1						
18	U912105000	BOTON DE MANDO Ø 8 EUROSIT	CONTROL BUTTON Ø 8 EUROSI	_	1						
19	U105635000	AMARRE QUEMADOR HORNO(HG)	OVEN BURNER FASTENING (HG)	_	1						
	Q222041000	REMACHE EXAGONAL M4 (INOX)	HEXAGONAL RIVET M4 (INOX)	_	4						
	Q012031000	TORNILLO EXAGONAL M5X10 A304	HEXAGONAL BOLT M5x10 A304	_	2						
20	U322118000	PILOTO COMPLETO 100.062	COMPLETE PILOT LIGHT 100.062	_	1						
	U442137000	INYECTOR Ø 0.4 GN	INJECTOR Ø 0.4 GN.	_	1						
	Q012031000	TORNILLO EXAGONAL M5X10 A304	HEXAGONAL BOLT M5x10 A304	_	2						
21	X505724000	MANGUITO PORTATOBERAS	NOZZLE HOLDER SLEEVE	_	1						
	Q223019000	TUERCA 3/8 GAS LATÓN	NUT 3/8 GAS BRASS	_	1						
22	U945005000	CONDUCC. A QUEMADOR HORNO	PIPING TO OVEN BURNER	_	1						
23	X505013000	REGULADOR DE AIRE POLIDORO	POLIDORO AIR CONTROL	_	1						
	Q031322000	TORNILLO ALOMADO M4X15	CURVED SCREW M4X15	_	1						
24	U105701000	QUEMADOR HORNO COMPLETO	COMPLETE OVEN BURNER	_	1						
	R422400000	TOBERA DE Ø 1.25 B.P.	NOZZLE Ø 1.25 B.P.	_	1						
	9429500000	TOBERA DE Ø 1,90 G.N.	NOZZLE Ø 1.90 G.N.	_	1						

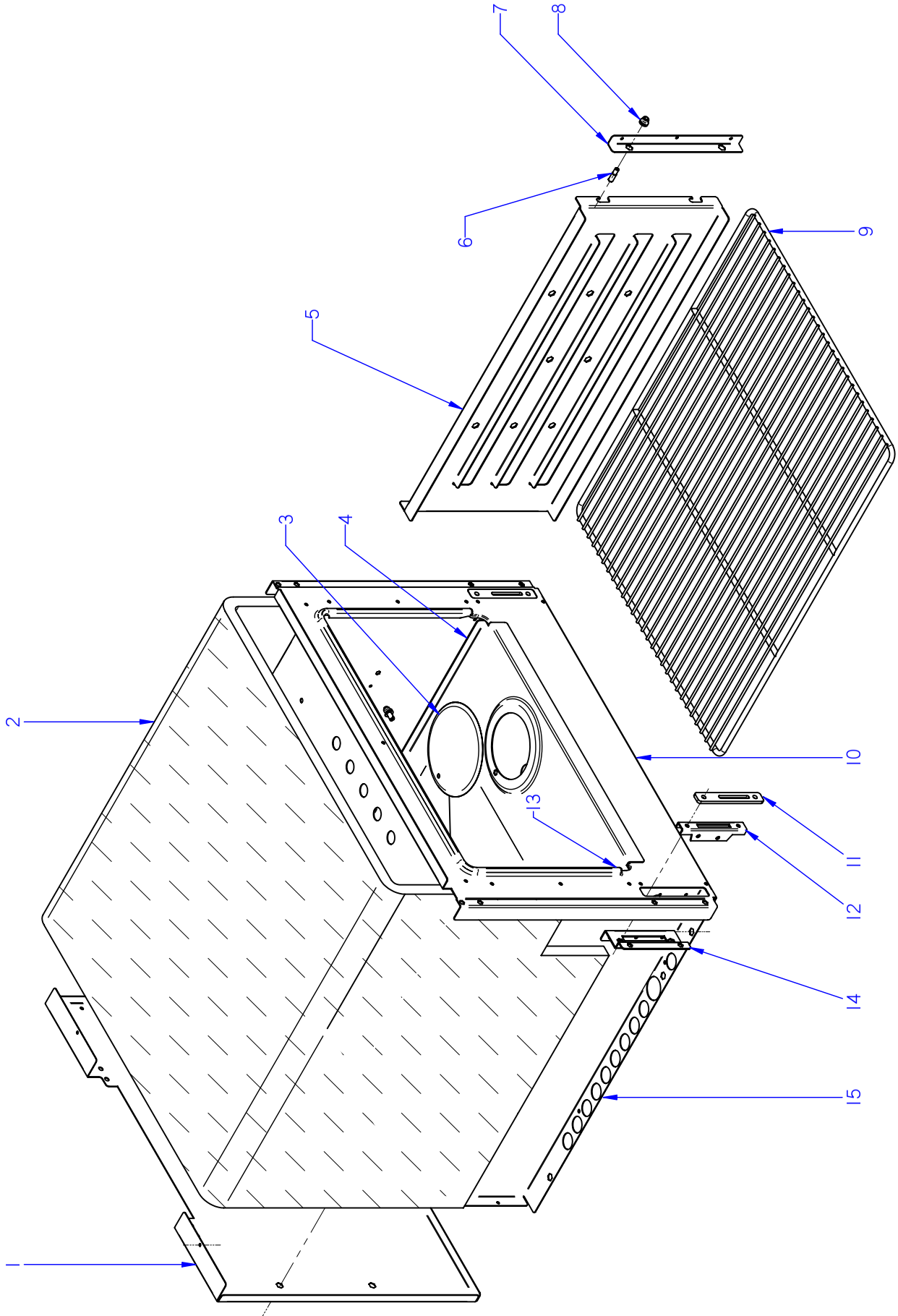

ITEM MARCADO EN COLOR = REPUESTO RECOMENDADO
COLOURED ITEM = RECOMMENDED SPARE PART

N plano	Firma	Fecha	Aparato		Lamina	
C-2068		2008-05	HORNO	COCINA CG7-11	4	Fagor Industrial S.Coop. Oñate FAGOR

MOD.	COCINAS	ZONA	HORNO	PLANO	C-2068

ITEM	CODIGO	DENOMINACION	TEXTO	CG7-11							NOTAS
1	U915603000	POSTERIOR DE HORNO G700	OVEN REAR G700	1							
	Q412000000	REMACHE TUBULAR 4 x 8	TUBULAR RIVET 4 x 8	12							
2	U325621000	AISLANTE 1455x670x20-AL1C	INSULATION 1455x670x20-AL1C	1							
3	U915618000	TAPILLA DE SOLERA G 700	BASE COVER G 700	1							
	Q101534000	TORNILLO EXAGON. M5x25 DIN931	HEXAGONAL BOLT. M5x25 DIN93	1							
4	U915617000	SOLERA DE HORNO G 700	OVEN BASE G 700	1							
	Q221342000	REMACHE EXAGONAL M5	HEXAGONAL RIVET M5	1							
5	U915607000	GUIA LATERAL HORNO G700	OVEN SIDE GUIDE G700	2							
6	Q151336000	TORNILLO SOPORTE GUIAS	GUIDE SUPPORT BOLT	4							
	Q302022000	ARANDELA 16X6X1.2 A.304	WASHER 16X6X1.2 A.304	4							
7	U915616000	SUPLEM. AMARRE GUIA LATERAL	SUPP. FASTENING SIDE GUIDE	2							
8	Q221343000	REMACHE EXAGONAL M6	HEXAGONAL RIVET M6	4							
9	U135642000	PARRILLA DE HORNO	OVEN TRAY	1							
10	U915601000	MARCO DE HORNO G700	OVEN FRAME G700	1							ELIMINADO 03.01.11
10	U965614000	MARCO DE HORNO G900 Y G700	OVEN FRAME G900 Y G700	1							INTRODUCIDO 03.01.11
	Q221304000	REMACHE ROSCA NUTSERT M5	THREADED RIVET NUTSERT M5	2							
11	U915619000	EMBELLECEDOR GUIA BISAGRA	HINGE GUIDE TRIM	2							
	Q152045000	TORNILLO AMARRRE M6X25	FASTENING BOLT M6X25	4							
12	U010512000	GUIA BISAGRA HORNO	OVEN HINGE GUIDE	2							ELIMINADO 11.12.11
12	12041846	GUIA BISAGRA G700 Y G900	G700 / G900 HINGE GUIDE	2							INTRODUCIDO 11.12.11
13	U025623000	JUNTA PUERTA HORNO INOX.	OVEN DOOR SEAL INOX.	1							ELIMINADO 03.01.11
13	U965613000	JUNTA HORNO FIBRA DE VIDRIO	FURNACE FIBERGLASS BOARD	1							INTRODUCIDO 03.01.11
14	U915604000	AMARRE GUIA BISAGRA HORNO	OVEN HINGE GUIDE FASTENING	2							
	Q412000000	REMACHE TUBULAR 4 x 8	TUBULAR RIVET 4 x 8	6							
	Q222042000	REMACHE EXAGONAL ROSCA M6	HEXAGONAL RIVET THREAD M6	4							
15	U915602000	CUERPO DE HORNO G700	OVEN BODY G700	1							ELIMINADO 03.01.11
15	U965615000	CUERPO DE HORNO AD	OVEN BODY AD	1							INTRODUCIDO 03.01.11
	Q221321000	REMACHE ROSCAD.NUTSERT.M6	THREADED RIVET .NUTSERT.M6	1							
	Q412000000	REMACHE TUBULAR 4 x 8	TUBULAR RIVET 4 x 8	8							

MOD.	COCINAS	ZONA	VARIOS	PLANO	

ITEM	CODIGO	DENOMINACION	TEXTO	CG7-10	CG7-11						NOTAS
	U746511000	FOLLETO INSTRUCCIONES CG700	INSTRUCTION LEAFLET CG700	1	1						ELIMINADO 17.12.08
	U916501000	FOLLETO INSTRUCCIONES CG700	INSTRUCTION LEAFLET CG700	1	1						INTRODUCIDO 17.12.08

MOD.	COCINAS	ZONA	REPUESTOS RECOMENDADOS RECOMMENDED SPARE PART	PLANO	

ITEM	CODIGO	DENOMINACION	TEXTO	CG7-10	CG7-11						NOTAS
11	U020528000	BISAGRA CIERRE HORNO	OVEN LOCK HINGE	2	:_						C-2066
8	R202100000	CONJUNTO SOP. PILOTO COMP.	COMP. PILOT SUPP. UNIT	1	1						C-2067
9	U222130000	TERMOPAR L=600	THERMOCOUPLE L=600	1	1						C-2067
12	U942102000	GRIFO 18700 BY-PASS 1,20	TAP 18700 BY-PASS 1.20	1	1						C-2067
14	U742131000	TERMOPAR L=1500 M9	THERMOCOUPLE L=1500 M9	_	1						C-2067
15	T982100000	VALVULA 630 EUR 630.343	VALVE 630 EUR 630.343	_	1						C-2067
15	R152102000	VALVULA 630 EUR 630.345	VALVE 630 EUR 630.345	_	1						C-2067
17	12041835	EJE LARGO ELECTROVALVULA	LONG SOLENOID SHAFT	_	1						C-2067
20	U322118000	PILOTO COMPLETO 100.062	COMPLETE PILOT LIGHT 100.062	_	1						C-2067
	U442137000	INYECTOR Ø 0.4 GN	INJECTOR Ø 0.4 GN.	_	1						C-2067
12	12041846	GUIA BISAGRA G700 Y G900	G700 / G900 HINGE GUIDE	_	2						C-2068
13	U965613000	JUNTA HORNO FIBRA DE VIDRIO	FURNACE FIBERGLASS BOARD	_	1						C-2068