SIMAG

# SC 70
# SM 70
# SCR 65
# SCR 85

## "J" SERIES

## R 134 A VERSION

## SPARE PARTS LIST
## CATALOGO RICAMBI
## CATALOGUE PIÈCES DÉTACHÉES
## ERSATZTEILENKATALOG

REV. 11/2006

| PAGE<br>PAGINA<br>PAGE<br>SEITE | TABLE OF CONTENTS | INDICE | TABLE DES MATIÈRES | INHALTVERZEICHNIS |
|---|---|---|---|---|
| 1 | TABLE OF CONTENTS | INDICE | TABLE DES MATIÈRES | INHALTVERZEICHNIS |
| 2-3 | TABLE 1 - UNIT PANELS | TAVOLA 1 - ASSIEME MOBILE | TABLE 1 - ENS. CARROSSERIE | TAFEL 1 - MACHINE GEHÄUSE |
| 4-5 | TABLE 2 - WATER SYSTEM PUMP CIRCUIT | TAVOLA 2 - SISTEMA IDRAULICO CIRCUITO POMPA | TABLE 2 - SISTEME HYDRAULIQUE CIRCUIT POMPE | TAFEL 2 - WASSER SYSTEM KREISLAUFPUMP |
| 6-7 | TABLE 3 - WATER SYSTEM BIN - WATER INLET/OUTLET | TAVOLA 3 - SISTEMA IDRAULICO CELLA - ENTR. USC. ACQUA | TABLE 3 - SISTEME HYDRAULIQUE CABINE - ENTR. SORT. EAU | TAFEL 3 - WASSER SYSTEM ZELLE-WASSER EINGANG / AUSGANG |
| 8-9 | TABLE 4 - REFRIGERANT SYSTEM AIR COOLED | TVOLA 4 - SISTEMA REFRIGERANTE RAFFR. AD ARIA | TABLE 4 - CIRCUIT FRIGORIFIQUE REFROID. A AIR | TAFEL 4 - GEFRIERSYSTEM LUFTGEKÜHLT |
| 10-11 | TABLE 5 - REFRIGERANT SYSTEM WATER SYSTEM | TAVOLA 5 - SISTEMA REFRIGERANTE RAFFR. AD ACQUA | TABLE 5 - CIRCUIT FRIGORIFIQUE REFROID. A EAU | TAFEL 5 - GEFRIERSYSTEM WASSERGEKÜHL T |
| 12 | COMPRESSON AND ELECTRIC COMPONENT CHARTS | TABELLA COMPRESSORI E COMPONENTI ELETTRICI | LISTE DES COMPRESSEURS ET COMPOSANTS ELECTRIQUE | KOMPRESSOR UND ELEKTRISCHER TEILLISTE |

# SC 70 - SM 70 - SCR 65 - SCR 85

TAVOLA 1

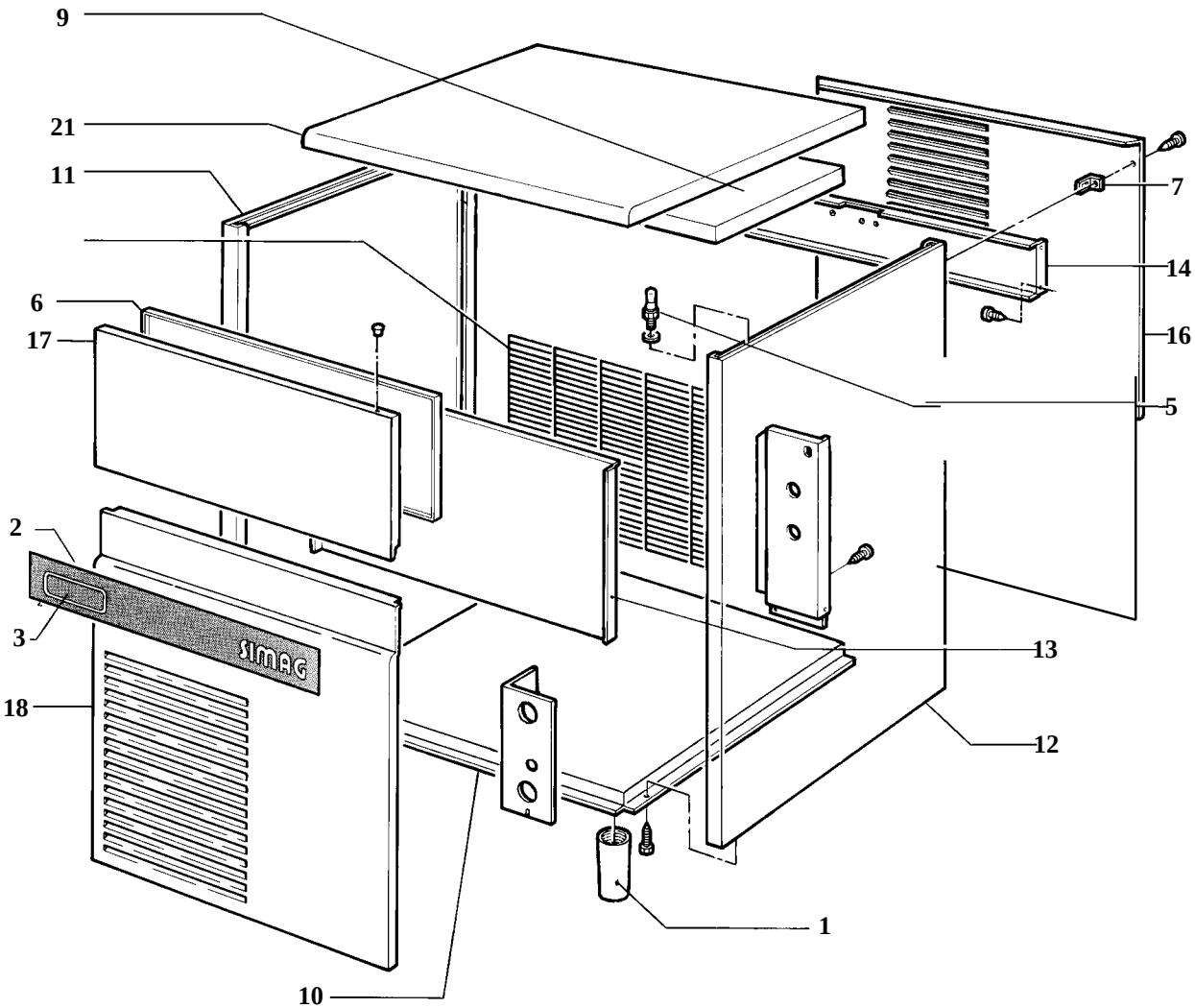


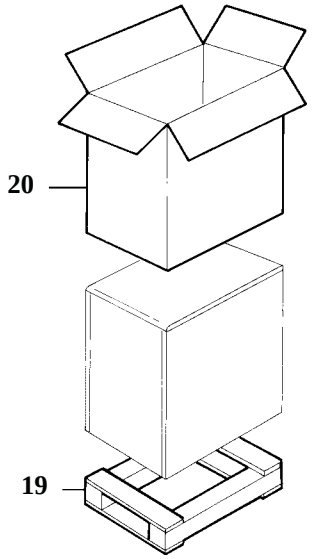

# SC 70 - SM 70 - SCR 65 - SCR 85

TAVOLA 1

| ITEM NO<br>POS NO<br>REP. NO<br>REF. NO | PART. NO - CODICE<br>REFERENCE - STUECK NR<br>SC70 / SM70 / SCR65 / SCR85 | DESCRIPTION | DESCRIZIONE | DESIGNATION | BESCHREIBUNG |
|---|---|---|---|---|---|
| 1 | 660638 00 | LEVELLING FOOT | PIEDE REGOLABILE | PIED RÉGLABE | GERUATEFUSS |
| 2 | 650805 00 | NAME PLATE | TARGA SERIGRAFATA | PLAQUETTE MARQUE | MARCHENSCHILD |
| 3 | 650805 21 / 650805 26 / 650805 30 / 650805 31 | MODEL LABEL | TARGA MODELLO | PLAQUETTE MODELE | MODELLBEZEICHNUNG |
| 5 | 650790 00 | STUD | PERNO | AXE | STIFT |
| 6-17 | 060491 25 | BIN DOOR | SPORTELLO | PORTE CABINE | SPEICHERTUER |
| 7 | 650806 00 | REAR STUD | PERNO POSTERIORE | AXE ARRIÉRE | TRÀGER - HINTEN |
| 9 | Z1AM088 | TOP PANEL INSULATION | ISOLAMENTO PANNELLO SUPER. | PANNEAU ISOLANT | ISOLATION |
| 10 | 781406 09 | BASE ASSY | ASSIEME BASAMENTO | PLAQUE DE BASE | GRUNDPLATTE |
| 11 | 721853 00 | LEFT SIDE PANEL S.S. | PANNELLO SINISTRO INOX | JOUE GAUCHE ACIER INOX | LINKE GEHÄUSESEITE EDELSTAHL |
| 12 | 721852 00 | RIGHT SIDE PANEL S.S. | PANNELLO DESTRO INOX | JOUE DROITE ACIER INOX | RECHTEGEHÄUSESE EDELSTAHL |
| 13 | 702330 00 | FRONT SUPPORT | TRAVERSO ANTERIORE | TRAVERSE ANTERIEURE | VORDERE VERBINDUNGSSTREBE |
| 14 | 704289 00 | PUMP SUPPORT PANEL | TRAVERSO SUPPORTO POMPA | TRAVERSE SUPPORT POMPE | HALTERUNG PUMPE |
| 16 | 702331 00 | REAR PANEL | PANNELLO POSTERIORE | PANNEAU POSTERIEUR | HINTERE ABDECKUNG |
| 18 | 721855 00 | FRONT PANEL S.S. | PANNELLO ANTERIORE INOX | PANNEAU AVANT ACIER INOX | VORDERWAND EDELSTAHL |
| 19 | 680427 00 | PALLET | BASE IMBALLO | SOCLE | PALETTE |
| 20 | 680149 04 | CARTON | SCATOLA IMBALLO | CARTON | KARTON |
| 21 | 781432 03 | TOP PANEL S.S. | PANNELLO SUPERIORE INOX | ENS. COUVERCLE | DECKEL GESAMTHEIT |

# SC 70 - SM 70 - SCR 65 - SCR 85

TAVOLA 2

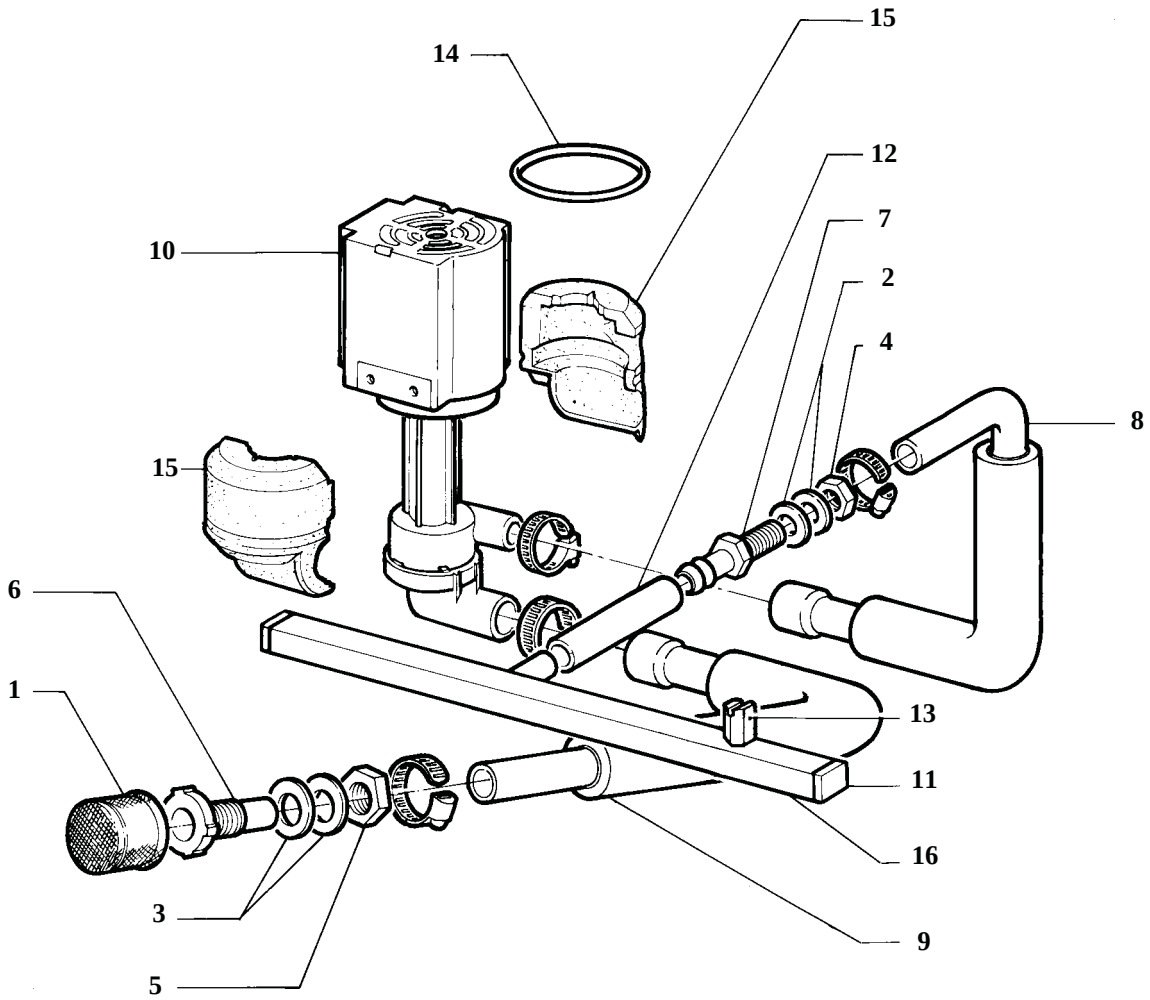

# SC 70 - SM 70 - SCR 65 - SCR 85

## TAVOLA 2

| ITEM NO<br>POS NO<br>REP. NO<br>REF. NO | PART. NO - CODICE<br>REFERENCE - STUECK NR<br>**SC70** / **SM70** / **SCR65** / **SCR85** | DESCRIPTION | DESCRIZIONE | DESIGNATION | BESCHREIBUNG |
|---|---|---|---|---|---|
| 1 | Z1AC012 | PUMP FEEDING FILTER | FILTRO ASPIRAZIONE POMPA | FILTRE ASPIRATION POMPE | PUMPENANSAUGFILTER |
| 2 | Z1AC013 | WASHER | RONDELLA | RONDELLE | UNTERLEGSCHEIBE |
| 3 | Z1AC014 | WASHER | RONDELLA | RONDELLE | UNTERLEGSCHEIBE |
| 4 | Z1AC016 | NUT | DADO | ECROU | MUTTER |
| 5 | Z1AC017 | NUT | DADO | ECROU | MUTTER |
| 6 | Z1AC029 | PUMP FEEDING PIPE FITTING | RACCORDO ASPIRAZIONE POMPA | RACCORD ASPIRATION POMPE | ANSAUGANSCHLUSSTUCK |
| 7 | Z1AC030 | PUMP FEEDING PIPE FITTING | RACCORDO ASPIRAZIONE POMPA | RACCORD ASPIRATION POMPE | ANSAUGANSCHLUSSTUCK |
| 8 | Z1ID006 | PUMP INLET WATER PIPE | TUBO MANDATA POMPA | TUYAU DE REFOULEMENT POMPE | PUMPENABFLUSSCHLAUCK |
| 9 | 610189 01 | PUMP FEEDING PIPE | TUBO ASPIRAZIONE POMPA | TUYAU D'ASPIRATION POMPE | PUMPENAGSAUGSCHLAUCH |
| 10 | 620415 00 | WATER PUMP ASSY | ASSIEME POMPA | ENSEMBLE POMPE A EAU | WASSERPUMPE |
| 11 | 660557 00 | PLUG MAINFOLD | TAPPO PER COLLETTORE | BOUCHON POUR COLLECTEUR | STOPFEN |
| 12 | 281830 04 | SPRAY BAR FEEDING PIPE | TUBO ALIMENTAZIONE COLLETTORE | TUYAU D'ALIMENTATION EAU | ANCHLUSSSCHLAUCH KOLLEKTOR |
| 13 | 660558 00 | SPRAY JET | SPRUZZATORI | GICLEURS | SPRÜHDÜSEN |
| 14 | Z1ID042 | O-RING | ANELLO O.R. | JOINT TORIQUE | O-RING |
| 15 | Z1ID043 | PUMP COVER INSULATION | ISOLAMENTO POMPA | COUPELLE ISOLANT POUR POMPE | PUMPENISOLATION |
| 16 | 650665 06 / 650665 07 / 650665 15 / 650665 15 | SPRAY BAR | COLLETTORE | COLLECTEUR | KOLLECTOR |

# SC 70 - SM 70 - SCR 65 - SCR 85

TAVOLA 3

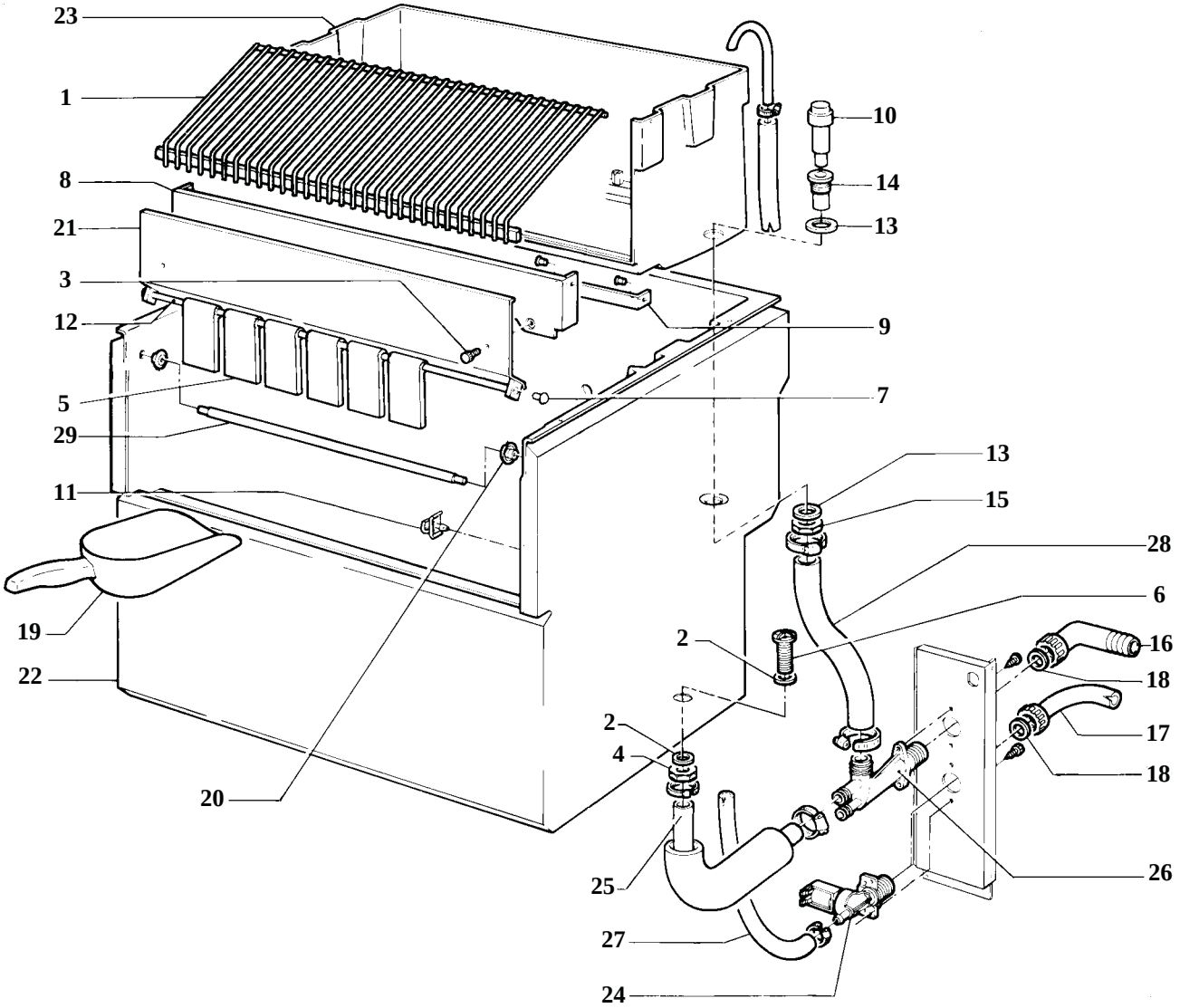

# SC 70 - SM 70 - SCR 65 - SCR 85

## TAVOLA 3

| ITEM NO<br>POS NO<br>REP. NO<br>REF. NO | PART. NO - CODICE<br>REFERENCE - STUECK NR<br>SC70 | SM70 | SCR65 | SCR85 | DESCRIPTION | DESCRIZIONE | DESIGNATION | BESCHREIBUNG |
|---|---|---|---|---|---|---|---|---|
| 1 | 650690 00 | Z1AC010 | 650690 01 | 650690 01 | CUBE DEFLECTOR | GRIGLIA SCORRIMENTO CUBETTI | GRILLE GLISSEMENT GLACONS | ABGLEIT GRILL |
| 2 | Z1AC013 | | | | WASHER | RONDELLA | RONDELLE | UNTERLEGSCHEIBE |
| 3 | Z1AC015 | | | | KNURLED SCREW | VITE A TESTA GODRONATA | VIS MOLETEE | SCHRAUBE |
| 4 | Z1AC016 | | | | NUT | DADO | ECROU | MUTTER |
| 5 | 660629 00 | | | | SPRAY CURTAIN FLAP | BANDIERINA | LAMELLE | ABDECKKLABBE |
| 6 | Z1AC028 | | | | BIN EXAUST PIPE FITTING | RACC. SCARICO CONTENITORE | RACCORD VIDANGE CONTENEUR | ANCHLUSSTUCH BEHALTER |
| 7 | 640041 29 | | | | O-RING | GUARNIZIONE | JOINT TORIQUE | SIMMER RING |
| 8 | 724325 00 | | | | EVAPORATOR SUPPORT | SUPPORTO EVAPORATORE | SUPPORT EVAPORATEUR | VERDAMPFERAUFLANGE |
| 9 | 722146 01 | | | | BIN SUPPORT | SUPPORTO CELLA | SUPPORT CHAMBRE | HALTERUNG INNENBEHALTER |
| 10 | 660601 00 | | | | OVERFLOW STAND PIPE | TUBO DI TROPPO PIENO | TROP PLEIN | UEBERLAUFROHR |
| 11 | 470019 00 | | | | | | | BEHALTERTHERMOSTATHALTER |
| 12 | 734328 18 | | | | SPRAY CURTAIN BAR | TUBO OTTONE | TUBE EN LAITON | ABDECKKLAPPENHALTER |
| 13 | Z1AC056 | | | | WASHER | RONDELLA | RONDELLE | UNTERLEGSCHEIBE |
| 14 | Z1AC057 | | | | OVERFLOW STAND | RACC. SCARICO TROPPO PIENO | RACCORD ENCOULEM. TROP-PLEIN | UBERLAUFROHR |
| 15 | Z1AC058 | | | | NUT | DADO | ECROU | MUTTER |
| 16 | Z1AD011 | | | | ELBOW WITH RING NUT | CURVA CON GHIERA | COUDE AVEC BAGUE | KRUMMER |
| 17 | 060513 00 | | | | WATER SUPPLY PIPE | TUBO ALIMENTAZIONE ACQUA | TUYAU D'ALIMENTATIO D'EAU | WASSERANSCHLUSSCHLAUCH |
| 18 | 640076 13 | | | | GASKET | GUARNIZIONE | JOINT | DICHTUNG |
| 19 | 650146 00 | | | | ICE SCOOP | SESSOLA | SASSE | EISSCHAUFEL |
| 20 | Z1AM025 | | | | RETAINER FOR DOOR BAR | PASSATUBO | PASSE-TUYAU | HALTERUNG |
| 21 | 060524 09 | | | | CURAIN FLAP ASSY | ASSIEME TENDINA | ENS. LAMELLES COMPLET | JALOUISE KOMPLETT |
| 22 | 060524 04 | | | | KIT BIN ASSY | KIT CELLA COMPLETA | KIT CHAMBRE COMPLETE | KIT ZELLE KOMPLETT |
| 23 | Z1CE032 | | | | INTERNAL BIN | CELLA INTERNA | CHAMBRE INTERIEUR | ZELLE INTERN |
| 24 | 650105 52 | | | | WATER INLET VALVE | VALVOLA INGRESSO ACQUA | VANNE ARRIVEE EAU | ELECTROMAGNETVENTIL |
| 25 | 610189 00 | | | | BIN EXAUST PIPE | TUBO SCARICO CONTENITORE | TUYAU VIDANGE CONTENEUR | BEHALTERAUSLAUFSCHLAUCH |
| 26 | Z1ID025 | | | | WATER EXAUST | SCARICO ACQUA | ECOULEMENT EAU | WASSERABLAUF |
| 27 | 281900 01 | | | | PIPE | TUBO | TUBE | SCHLAUCH |
| 28 | Z1ID028 | | | | PIPE | TUBO | TUBE | SCHLAUCH |
| 29 | Z1AM018 | | | | DOOR SUPPORT BAR | ASTA SPORTELLO | TIGE PORTE | KLAPPENACHSE |
| | | | | | | | | |

# SC 70 - SM 70 - SCR 65 - SCR 85

TAVOLA 4

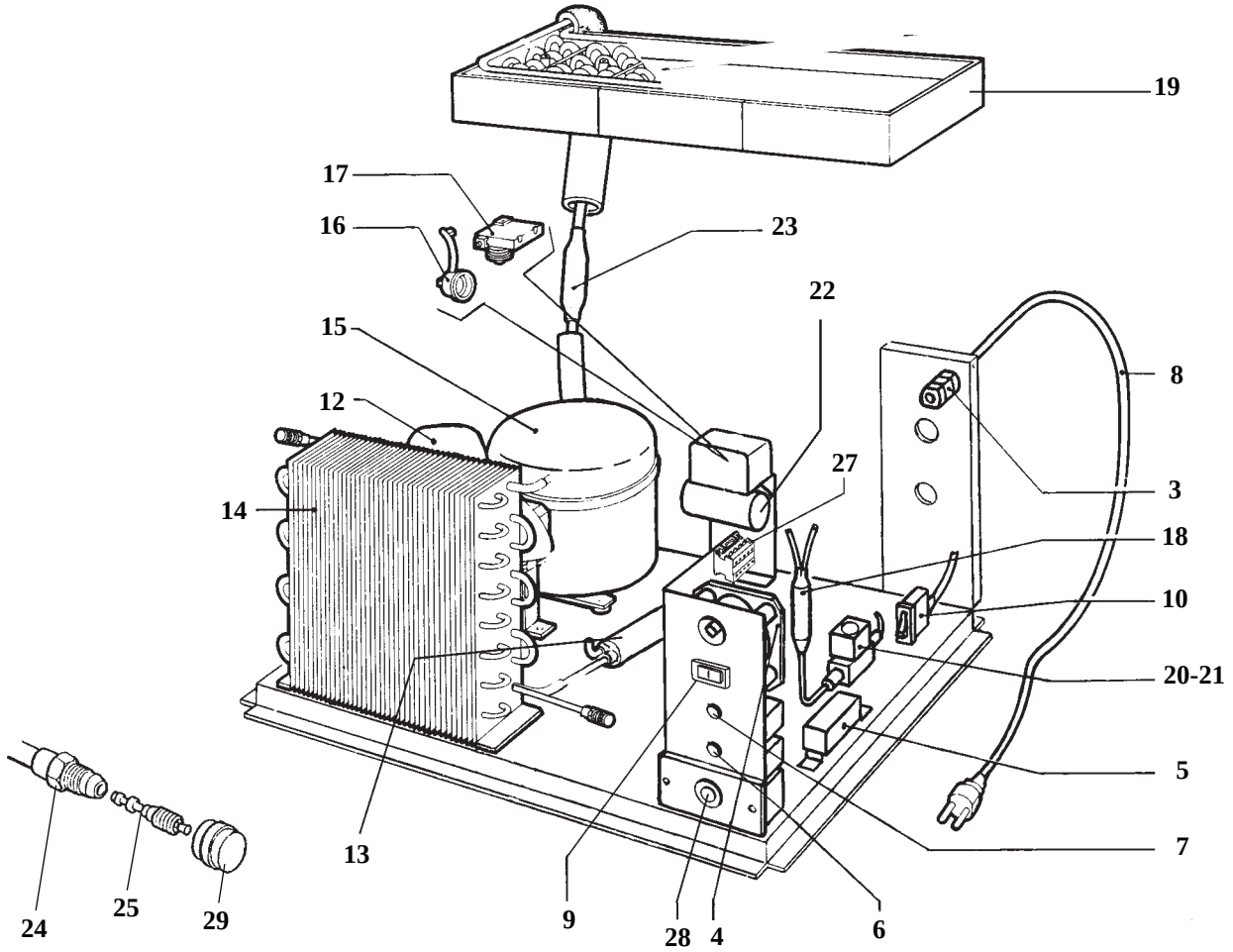

# SC 70 - SM 70 - SCR 65 - SCR 85

## TAVOLA 4

| ITEM NO<br>POS NO<br>REP. NO<br>REF. NO | PART. NO - CODICE<br>REFERENCE - STUECK NR<br>**SC70** | **SM70** | **SCR65** | **SCR85** | DESCRIPTION | DESCRIZIONE | DESIGNATION | BESCHREIBUNG |
|---|---|---|---|---|---|---|---|---|
| 3 | 630107 00 | | | | CABLE TERMINAL RING | FISSACAVO | SERRE-CABLE | KABELKLEMME |
| 4 | 620441 00 | | | | TIMER | TIMER | MINUTERIE | TIMER |
| 5 | 620075 00 | | | | PRESSURE GAUGE | PRESSOSTATO | PRESSOSTAT | DRUCHWACHTER |
| 6 | 630005 00 | | | | BIN THERMOSTAT | TERMOSTATO CONTENITORE | TERMOSTAT CONTENEUR | BEHALTERTHERMOSTAT |
| 7 | 620201 01 | | | | EVAPORATOR THERMOSTAT | TERMOSTATO EVAPORATORE | EVAPORATEUR THERMOSTAT | VERDAMPFERTHERMOSTAT |
| 8 | 630136 00 | | | | ELECTRIC CABLE | CAVO DI ALIMENTAZIONE | CABLE D'ALIMENTATION | KABEL |
| 9 | 620442 02 | | | | SWITCH | COMMUTATORE | INTERRUPTEUR | UMSHALTER |
| 10 | 620453 00 | | | | MAIN SWITCH | INTERRUTTORE LUMINOSO | INTERRUPTEUR LUMINEUX | LEUCHTEND SHALTER |
| 12 | 620419 02<br>620419 33<br>620419 63 | 620419 02<br>620419 33<br>620419 63 | 620419 02<br>620419 33<br>620419 63 | 620419 04<br>620419 33<br>620419 64 | FAN MOTOR<br>FAN BLADE<br>FAN SUPPORT | MOTORE VENTILATORE<br>VENTOLA<br>STAFFA | MOTO-VENTILATEUR<br>PALETTE<br>SUPPORT | LUFTER<br>FACHER<br>HALTER |
| 13 | 630137 01 | | | | MECHANICAL FILTER | FILTRO MECCANICO | FILTRE MECANIQUE | MECHANISHFILTER |
| 14 | 620405 00 | 620405 00 | 620405 00 | 620440 00 | AIR CONDENSER | CONDENSATORE | CONDENSEUR | KONDENSATOR |
| 15 | 670099 02 | 670099 02 | 670099 02 | 670099 03 | COMPRESSOR | COMPRESSORE | COMPRESSEUR | KOMPRESSOR |
| 16 | 650058 39 | 650058 39 | 650058 39 | 620058 42 | PROTECTOR | PROTETTORE | RACCORD EVACUATION EAU | WASSERABFLUSSANSCHLUSSE |
| 17 | 620057 44 | 620057 44 | 620057 44 | 620057 45 | STARTING RELAY | RELE' DI AVVIAMENTO | RELAIS DEMARRAGE | ANLAUFRELAIS |
| 18 | 630003 06 | | | | FILTER | FILTRO | FILTRE | FILTER |
| 19 | 784492 00 | 784489 00 | 784463 01 | 784463 01 | EVAPORATOR ASSY | ASSIEME EVAPORATORE | ENS. EVAPORATEUR | VERDAMPFER KOMPLETT |
| 20-21 | 620306 27<br>620306 48 | 620306 27<br>620306 48 | 620306 27<br>620306 48 | 620306 46<br>620306 48 | HOT GAS VALVE BODY<br>HOT GAS VALVE COIL | CORPO VALVOLA GAS CALDO<br>BOBINA VALVOLA GAS CALDO | CORPS DE VANNE GAZ CHAUD<br>BOBINE DE VANNE GAZ CHAUD | HEISSGAS VENTILGEHAUSE<br>HEISSGAS VENTILSPULE |
| 22 | 620167 01 | 620167 01 | 620167 01 | 620167 01 | START CAPACITOR | CONDENSATORE DI SPUNTO | CAPACITE' DEMARRAGE | START KONDENSATOR |
| 23 | 784444 06 | 784444 06 | 78444406 | 784444 11 | ACCUMULATOR ASSY | ASSIEME ACCUMULATORE | ENSAMBLE ACCUMULATEUR | SAMMLER UND SUGLEITUNGEN |
| 24 | 650109 00 | | | | VALVE BODY | CORPO VALVOLA | CORPS DE VANNE | VENTILGEHAUSE |
| 25 | 670012 00 | | | | PISTON | PISTONCINO PER VALVOLA | VALVE PISTON | VENTILKOLBEN |
| 27 | 630119 02 | | | | CONTACTOR | CONTATTORE | CONTACTEUR | SHALTSCHUTZ |
| 28 | 620443 02 | | | | SAFETY THERMOSTAT | TERMOSTATO DI SICUREZZA | THERMOSTAT DE SECURITE' | SICHERHEITSTHERMOSTAT |
| 29 | 650106 00 | | | | VALVE CAP | CAPPUCCIO VALVOLA | CAPUCHON DE VANNE | VENTIL KLAPPE |

# SC 70 W - SM 70 W - SCR 65 W -SCR 85 W

TAVOLA 5

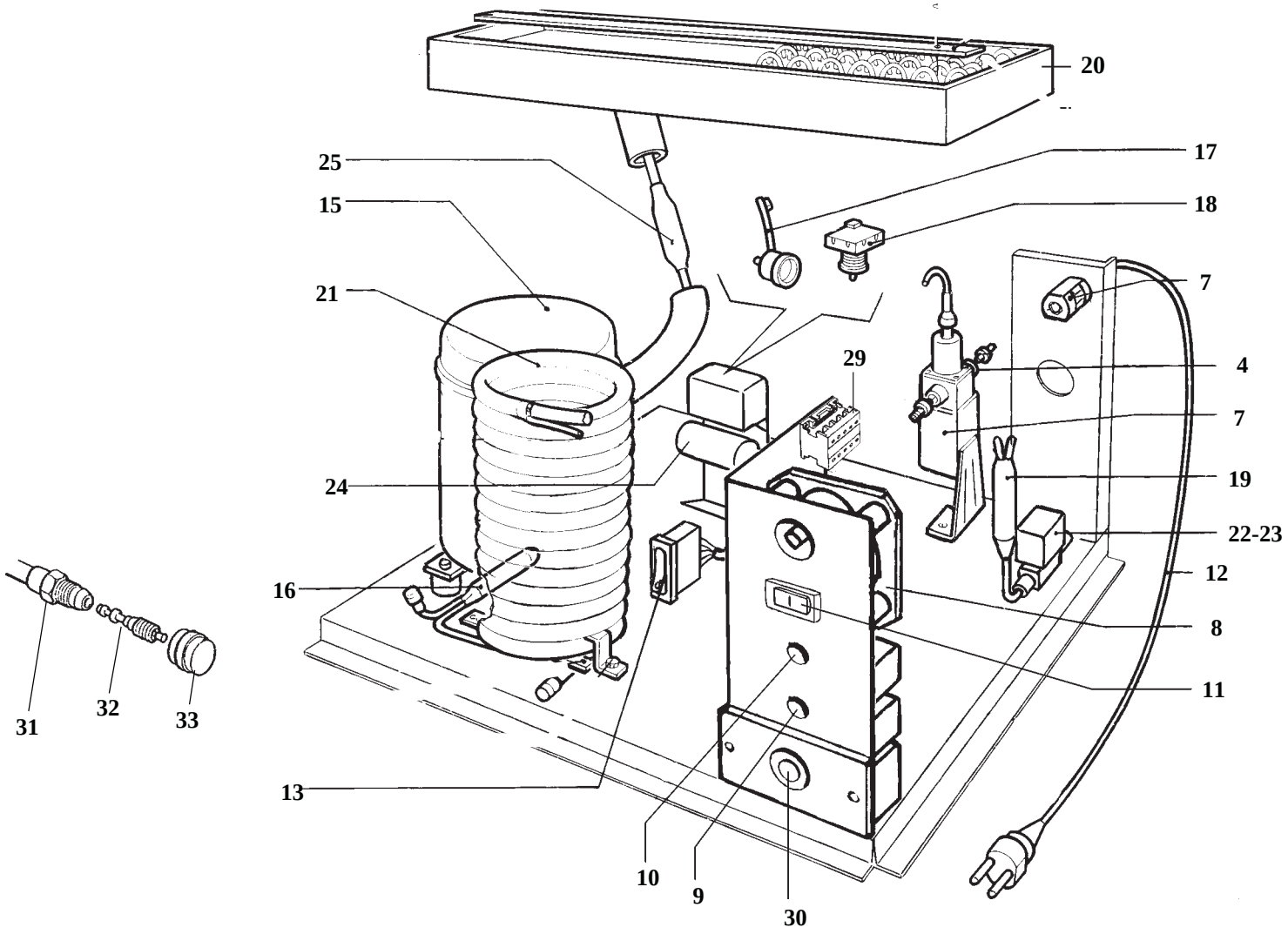

# SC 70 - SM 70 - SCR 65 - SCR 85

## TAVOLA 5

| ITEM NO<br>POS NO<br>REP. NO<br>REF. NO | PART. NO - CODICE<br>REFERENCE - STUECK NR<br>SC70 | SM70 | SCR65 | SCR85 | DESCRIPTION | DESCRIZIONE | DESIGNATION | BESCHREIBUNG |
|---|---|---|---|---|---|---|---|---|
| 4 | 620111 00 | | | | WATER VALVE | VALVOLA PRESSOSTATICA | VANNE PRESSOSTATIQUE | WASSERVENTIL |
| 7 | 630107 00 | | | | CABLE TERMINAL RING | FISSACAVO | SERRE-CABLE | KABELKLEMME |
| 8 | 620441 00 | | | | TIMER | TIMER | MINUTERIE | TIMER |
| 9 | 630005 00 | | | | BIN THERMOSTAT | TERMOSTATO CONTENITORE | THERMOSTAT CONTENEUR | BEHALTERTHERMOSTAT |
| 10 | 620201 01 | | | | EVAPORATOR THERMOSTAT | TERMOSTATO EVAPORATORE | EVAPORATEUR THERMOSTAT | VERDAMPFERTHERMOSTAT |
| 11 | 620442 01 | | | | SWITCH | COMMUTATORE | INTERRUPTEUR | UMSHALTER |
| 12 | 630136 00 | | | | ELECTRIC CABLE | CAVO DI ALIMENTAZIONE | CABLE D'ALIMENTATION | KABEL |
| 13 | 620453 00 | | | | MAIN SWITCH | INTERRUTTORE LUMINOSO | INTERRUPTEUR LUMINEUX | LEUCHTEND SHALTER |
| 15 | 670099 02 | 670099 02 | 670099 02 | 670099 03 | COMPRESSOR | COMPRESSORE | COMPRESSEUR | KOMPRESSOR |
| 16 | 630137 01 | 630137 01 | 630137 01 | 630137 01 | MECHANICAL FILTER | FILTRO MECCANICO | FILTRE MECANIQUE | MECHANISHFILTER |
| 17 | 650058 39 | 650058 39 | 650058 39 | 650058 42 | PROTECTOR | PROTETTORE | RACCORD EVACUATION EAU | WASSERABFLUSSANSCHLUSSE |
| 18 | 620057 44 | 620057 44 | 620057 44 | 620057 45 | STARTING RELAY | RELE' DI AVVIAMENTO | RELAIS DEMARRAGE | ANLAUFRELAIS |
| 19 | 630003 06 | | | | FILTER | FILTRO | FILTRE | FILTER |
| 20 | 784492 00 | 784489 00 | 784463 01 | 784463 01 | EVAPORATOR ASSY | ASSIEME EVAPORATORE | ENS. EVAPORATEUR | VERDAMPFER KOMPLETT |
| 21 | 620331 00 | 620331 00 | 620331 00 | 620331 00 | WATER CONDENSER | CONDENSATORE AD ACQUA | CONDENSEUR A EAU | WASSER KONDENSATOR |
| 22-23 | 620306 27<br>620306 48 | 620306 27<br>620306 48 | 620306 27<br>620306 48 | 620306 46<br>620306 48 | HOT GAS VALVE BODY<br>HOT GAS VALVE COIL | CORPO VALVOLA GAS CALDO<br>BOBINE VALVOLA GAS CALDO | CORPS DE VANNE GAZ CHAUD<br>BOBINE DE VANNE GAZ CHAUD | EISSGAS VENTILGHEAUSE<br>HEISSGAS VENTILSPULE |
| 24 | 620167 01 | 620167 01 | 620167 01 | 620167 01 | START CAPACITOR | CONDENSATORE DI SPUNTO | CAPACITE' DEMARRAGE | START KONDENSATOR |
| 25 | 784444 06 | 784444 06 | 784444 06 | 784444 11 | ACCUMULATOR ASSY | ASSIEME ACCUMULATORE | ENSAMBLE ACCUMULATEUR | SAMMLER UND SUGLEITUNGEN |
| 29 | 630119 02 | | | | CONTACTOR | CONTATTORE | CONTACTEUR | SHALTSCHUTZ |
| 30 | 620443 02 | | | | SAFETY THERMOSTAT | TERMOSTATO DI SICUREZZA | THERMOSTAT DE SECURITE' | SICHERHEITSTHERMOSTAT |
| 31 | 650109 00 | | | | VALVE BODY | CORPO VALVOLA | CORPS DE VANNE | VENTILGEHAUSE |
| 32 | 670012 00 | | | | PISTON | PISTONCINO PER VALVOLA | VALVE PISTON | VENTILKOLBEN |
| 33 | 650106 00 | | | | VALVE CAP | CAPPUCCIO VALVOLA | CAPUCHON DE VANNE | VENTIL KLAPPE |

# SC70 - SM70 - SCR65 - SCR85

COMPRESSOR CHART, TABELLA COMPRESSORI, TABLEAU COMPRESSEUR, KOMPRESSOR KARTE

| MODEL<br>MODELLO<br>MODELE<br>MODELL | VOLTS<br>TENSIONE<br>TENSION<br>SPANNUNG | COMPRESSOR MODEL<br>MOD. COMPRESSORE<br>TYPE COMPRESSEUR<br>KOMPRESSOR TYP | COMPRESSOR<br>COMPRESSORE<br>COMPRESSEUR<br>KOMPRESSOR | RELAY<br>RELE'<br>RELAIS<br>RELAIS | PROTECTOR<br>PROTETTORE<br>PROTECTEUR<br>SCHUTZGERAT | START CAPACITOR<br>CAPACITA' D'AVV.<br>CAPACITE' DE DEMARRAGE<br>START KONDENSATOR |
|---|---|---|---|---|---|---|
| SC70 | 115/60/1 | - | - | - | - | - |
| SM70 | 115/60/1 | - | - | - | - | - |
| SCR65 | 115/60/1 | - | - | - | - | - |
| SCR85 | 115/60/1 | - | - | - | - | - |
| SC70 | 230/60/1 | CAJ4461Y | 670099 07 | 620057 48 | 650058 78 | 620167 01 |
| SM70 | 230/60/1 | CAJ4461Y | 670099 07 | 620057 48 | 650058 78 | 620167 01 |
| SCR65 | 230/60/1 | - | - | - | - | - |
| SCR85 | 230/60/1 | - | - | - | - | - |
| SC70 | 230/50/1 | CAJ4461Y | 670097 02 | 620057 44 | 620058 39 | 620167 01 |
| SM70 | 230/50/1 | CAJ4461Y | 670097 02 | 620057 44 | 620058 39 | 620167 01 |
| SCR65 | 230/50/1 | CAJ4461Y | 670097 02 | 620057 44 | 620058 39 | 620167 01 |
| SCR85 | 230/50/1 | CAJ4492Y | 670099 03 | 620057 45 | 620058 42 | 620167 01 |

# SC70 - SM70 - SCR65 - SCR85

ELECTRIC COMPONENTS CHART, TABELLA COMPONENTI ELETTRICI, TABLEAU COMPOSANTS ELECTRIQUE, ELEKTRISCHEKARTE

| MODEL<br>MODELLO<br>MODELE<br>MODELL | VOLTS<br>TENSIONE<br>TENSION<br>SPANNUNG | WATER PUMP<br>POMPA<br>POMPE A EAU<br>WASSER PUMPE | FAN MOTOR ONLY<br>MOTORE VENTILATORE<br>MOTEUR VENTILATEUR<br>LUFTER MOTOR | WATER INLET VALVE<br>VALV. INGR. ACQUA<br>V.E.M. ARRIVEE' EAU<br>WASSEREIN. VENTIL | HOT GAS VALVE<br>VALVOLA GAS CALDO<br>V.E.M. GAZ CHAUDS<br>HEISSGAZ VENTIL | TIMER<br>TIMER<br>MINUTERIE<br>TIMER |
|---|---|---|---|---|---|---|
| SC70 | 115/60/1 | - | - | - | - | - |
| SM70 | 115/60/1 | - | - | - | - | - |
| SCR65 | 115/60/1 | - | - | - | - | - |
| SCR85 | 115/60/1 | - | - | - | - | - |
| SC70 | 230/60/1 | 620415 01 | 620419 02 | 650105 52 | 620306 27 / 620306 48 | 620441 00 |
| SM70 | 230/60/1 | 620415 01 | 620419 02 | 650105 52 | 620306 27 / 620306 48 | 620441 00 |
| SCR65 | 230/60/1 | - | - | - | - | - |
| SCR85 | 230/60/1 | - | - | - | - | - |
| SC70 | 230/50/1 | 620415 00 | 620419 02 | 650105 52 | 620306 27 / 620306 48 | 620441 00 |
| SM70 | 230/50/1 | 620415 00 | 620419 02 | 650105 52 | 620306 27 / 620306 48 | 620441 00 |
| SCR65 | 230/50/1 | 620415 00 | 620419 02 | 650105 52 | 620306 27 / 620306 48 | 620441 00 |
| SCR85 | 230/50/1 | 620415 00 | 620419 04 | 650105 52 | 620306 46 / 620306 48 | 620441 00 |