SAGI - BASE REFRIGERATA prof.70 cm, -2/+10°C
KIGB - 08-05-2017 »

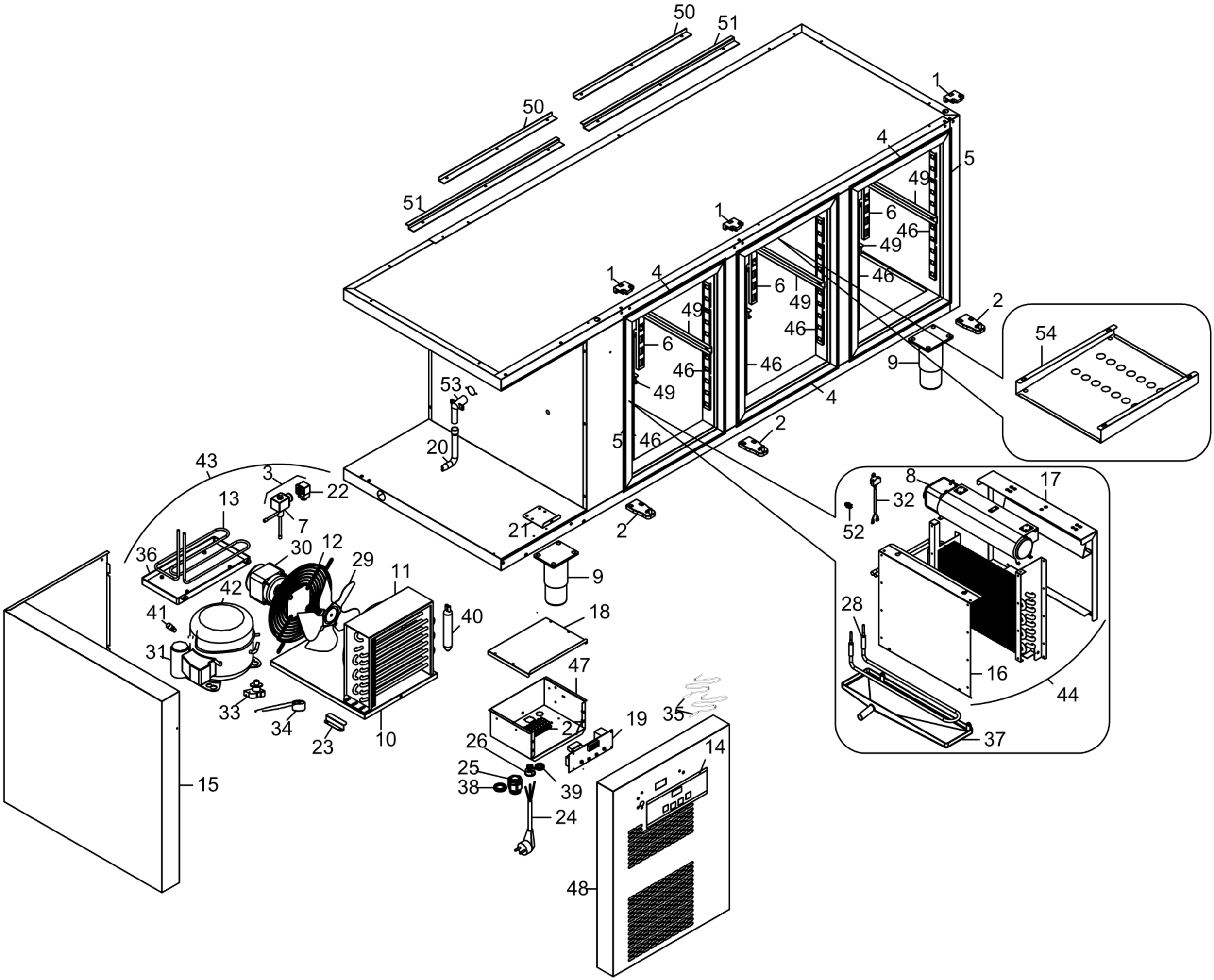

Modello Typ Model
Modele Modelo

		KIGA KIGAA KIGAM	KIGB KIGBA KIGBM	KIGC KIGCA KIGCM
Porte Türen Doors	SX	1	2	3
Portes Puertas	DX	1	1	1

SX

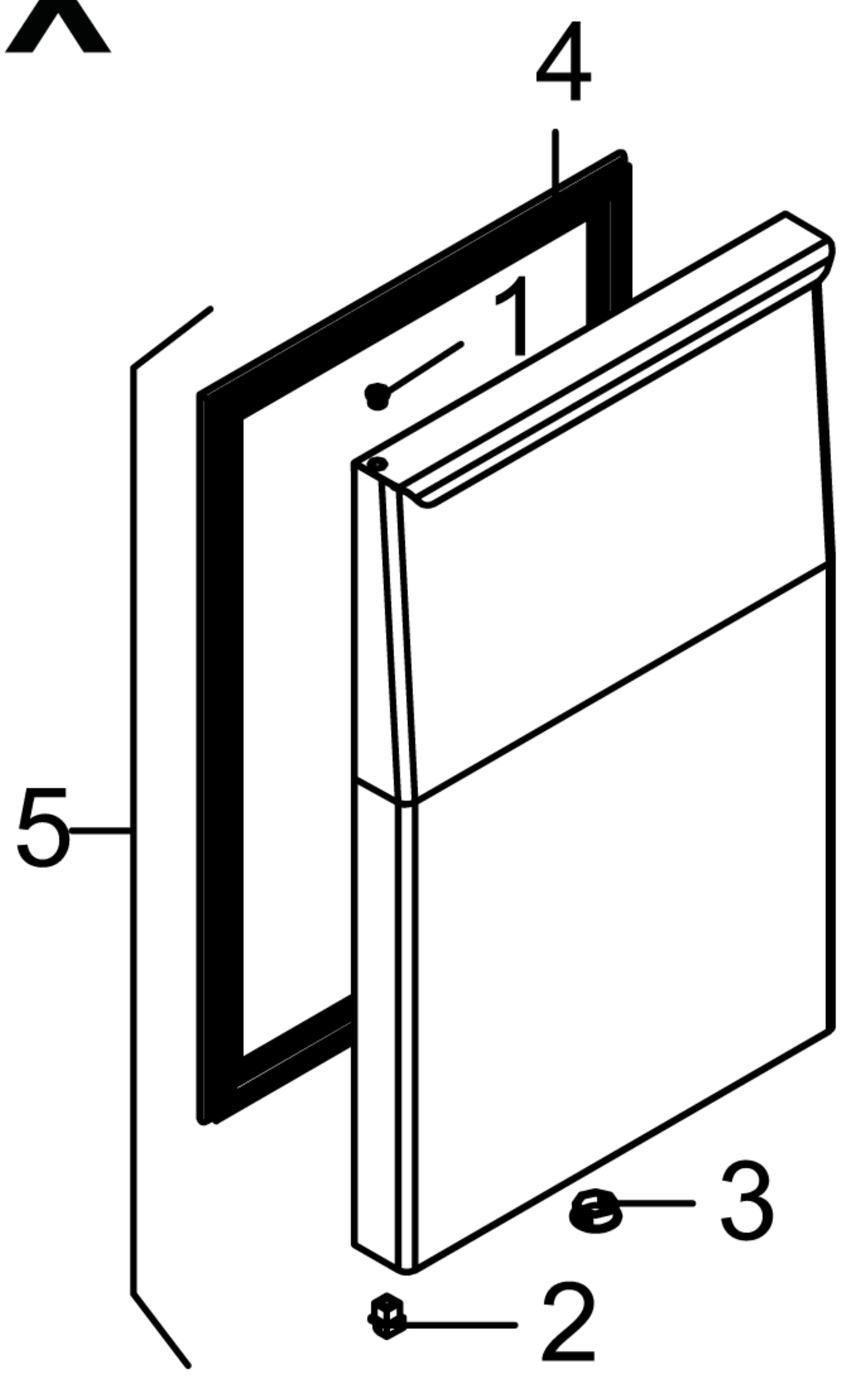

DX

