SIMAG

SDN 30
SDN 35

R 134 A VERSION

SPARE PARTS LIST
CATALOGO RICAMBI
CATALOGUE PIÈCES DÉTACHÉES
ERSATZTEILENKATALOG

090090.07 REV. 04/2009

PAGE PAGINA PAGE SEITE	TABLE OF CONTENTS	INDICE	TABLE DES MATIERES	INHALTVERZEICHNIS
1	TABLE OF CONTENTS	INDICE	TABLE DES MATIERES	INHALTVERZEICHNIS
2/3	UNIT PANELS	ASSIEME MOBILE	ENS. CAROSSERIE	MACHINE GEHAUSE
4/5	REFRIGERANT SYSTEM AIR COOLED	SISTEMA REFRIGERANTE RAFFR. AD ARIA	CIRCUIT FRIGORIFIQUE REFROID. A AIR	GEFRIERSYSTEM LUFTGEKUEHLT
6/7	REFRIGERANT SYSTEM WATER COOLED	SISTEMA REFRIGERANTE RAFFR. AD ACQUA	CIRCUIT FRIGORIFIQUE REFROID. A EAU	GEFRIERSYSTEM WASSERGEKUEHLT
8/9	WATER SYSTEM	CIRCUITO IDRAULICO	CIRCUIT HYDRAULIQUE	WASSER SYSTEM
10/11	CONTROL BOX	SCATOLA DI CONTROLLO	BOITE ELECTRIQUE	SCHALTSCHRANK
12	COMPRESSOR AND ELECTRIC COMPONENT CHARTS	TABELLA COMPRESSORI E COMPONENTI ELETTRICI	LISTE DES COMPRESSEURS ET COMPOSANTS ELECTRIQUE	KOMPRESSOR UND ELEKTRISCHER TEILLISTE

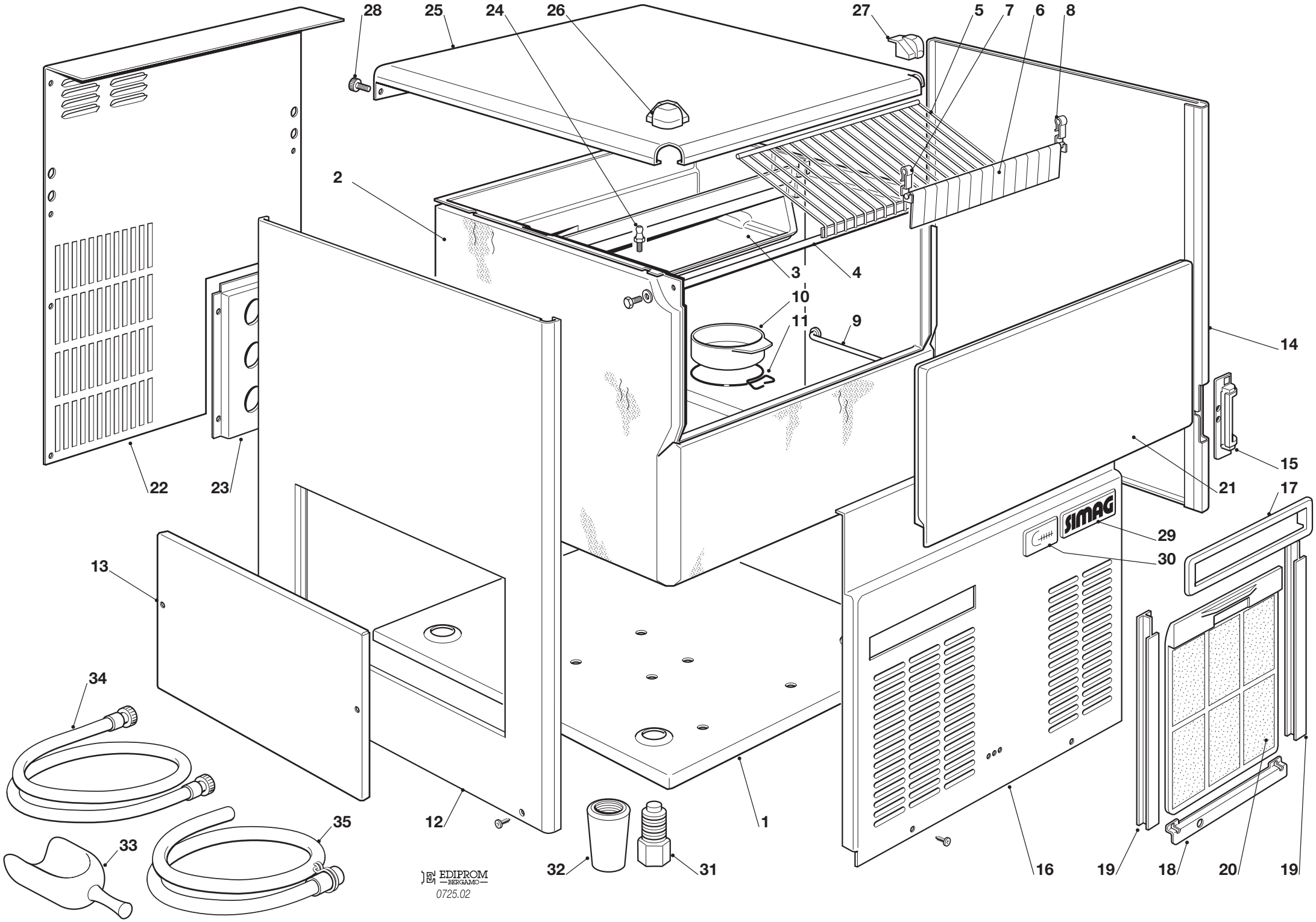
28
25
24
26
27
5
7
6
8
2
3
4
10
11
9
14
15
21
17
22
23
29
30
13
34
35
33
12
1
32
31
16
19
18
20
19
SIMAG
EDIPROM
BERGAMO
0725.02

SDN 30- SDN 35 -UNIT PANELS - ASSIEME MOBILE - ENS. CARROSSERIE - MACHINE GEHAUSE-

ITEM NO POS NO REP. NO REF. NO	PART NO - CODICE REFERENCE - STUECK NR.	DESCRIPTION	DESCRIZIONE	DESIGNATION	BESCHREIBUNG
1	702532 00 702534 00	BASE SDN 30 BASE SDN 35	PIASTRINA DI BASE SDN 30 PIASTRINA DI BASE SDN 35	PLAQUE DE BASE SDN 30 PLAQUE DE BASE SDN 35	GRUNDPLATTE SDN 30 GRUNDPLATTE SDN 35
2	782094 03 782094 04	INSULATED BIN ASSY SDN 30 INSULATED BIN ASSY SDN 35	ASSIEME CELLA ISOLATA SDN 30 ASSIEME CELLA ISOLATA SDN 35	ENS. CABINE SDN 30 ENS. CABINE SDN 35	ISOLIEREISSPEICHER SDN 30 ISOLIEREISSPEICHER SDN 35
3	660635 05 660635 06	EVAPORAT. HOUSING SDN 30 EVAPORAT. HOUSING SDN 35	INVOLUCRO EVAPORAT. SDN 30 INVOLUCRO EVAPORAT. SDN 35	CHAMBRE INTERIEUR SDN 30 CHAMBRE INTERIEUR SDN 35	CELLE INTERN SDN 30 CELLE INTERN SDN 35
4	732016 07	BIN DOOR BRACKET	ASTA PORTELLO	TIGE PORTE	KLAPPENACHSE
5	650707 00	ICE DEFLECTOR	GRIGLIA SCORRIMENTO CUBETTI	GRILLE GLISSEMENT GLAÇON	ABGLEITGRILL
6	783171 01R	CURTAIN ASSY	ASSIEME TENDINA	ENS. LAMELLE	ABDECKKLAPPE GESAMTHEIT
7	660388 00	LEFT CURTAIN SUPPORT	SUPP. TENDINA SINISTRO	SUPP. LAMELLE GAUCHE	LINKE ABDECKLAPPE HALTERUNG
8	660388 01	RIGHT CURTAIN SUPPORT	SUPP. TENDINA DESTRO	SUPP. LAMELLE DROITE	RECHTE ABDECKLAPPE HALTER.
9	732016 07	BULB HOLDER	TUBO PORTABULBO	TUBE PORTEBULBE	FUEHLERHALTER
10	660741 00	PLASTIC PLUG	TAPPO INVOLUCRO EVAPORAT.	BOUCHON EN PLASTIQUE	PLASTIKSTOPFEN
11	460047 01	SPRING	MOLLA	RESSORT	FEDER
12	722303 00	LEFT SIDE PANEL	PANNELLO SINISTRO INOX	JOUE GAUCHE ACIER INOX	LINKE GEHÄUSESEITE EDELSTAHL
14	722302 00	RIGHT SIDE PANEL	PANNELLO DESTRO INOX	JOUE DROITE ACIER INOX	RECHTEGEHÄUSESEITE EDELST.
15	660882 00	FRONT SWITCH PLASTIC PROT	CARTER PROTEZIONE INTERRUT	CARTER PROTECTION INTERRUPT	SCHALTERABDECKUNG
16	722305 00 722305 01	FRONT PANEL AIR SDN 30-35 FRONT PANEL WAT. SDN 30-35	PAN.LO ANT. ARI A SDN 30-35 PAN.LO ANT. ACQU. SDN 30-35	PAN.AU AVANT . AIR SDN 30-35 PAN.AU AVANT . EAU SDN 30-35	VOR.WAND ED.T. LUFT SDN 30-35 VOR.WAND ED.T. WASS. SDN 30-35
17	660886 00	AIR FILTER SEAT	SEDE FILTRO ARIA	SIEGE FILTRE A AIR	LUFTFILTERHALTER
18	724422 01	BRACKET SLIDE, AIR FILTER	SUPPORTO GUIDA FILTRO ARIA	SUPPORT GLISSIERE FILTRE A AIR	TRAGER FUHRUNF FUR LUFTFILT.
19	660887 00	SLIDE, AIR FILTER	GUIDA FILTRO ARIA	GLISSIERE FILTRE A AIR	FUHRUNF FUR LUFTFILTIER
20	660885 00	AIR FILTER	FILTRO ARIA	FILTRE A AIR	LUFT FILTIER
21	782092 05R	BIN DOOR	SPORTELLO	PORTE CABINE	SPEICHERTUER
22	702533 00	REAR PANEL	PANNELLO POSTERIORE	PANNEAU POSTERIEUR	HINTERE ABDECKUNG
23	702526 00	METAL BRACKET FOR FITTING	SUPPORTO ATTACCHI	SUPPORT DE RACCORDS	METALLTRÄGER
24	650790 00	STUD	PERNO	AXE	STIFT
25	722304 00	TOP PANEL	PANNELLO SUPERIORE INOX	ENS. COUVERCLE	DECKEL GESAMTHEIT
26	660884 01	LEFT TOP CAP	TAPPO IN PLASTICA SINISTRO	CAPUCHON EN PLAST. GAUCHE	PLASTIK PROFEN LINK
27	660884 00	RIGHT TOP CAP	TAPPO IN PLASTICA DESTRO	CAPUCHON EN PLAST. DROITE	PLASTIK PROFEN RECHT
28	650806 00	REAR STUD	PERNO POSTERIORE	AXE ARRIÉRE	TRÄGEN - HINTEN
29	650976 00	SIMAG LOGO	TARGHETTA SIMAG	EMBLEME SIMAG	SIMAG ABGEBILDET
30	650976 03 650976 04	SDN 30 LABEL SDN 35 LABEL	TARGHETTA SDN 30 TARGHETTA SDN 35	EMBLEME SDN 30 EMBLEME SDN 35	SDN 30 ABGEBILDET SDN 35 ABGEBILDET
31	650382 01	SDN 30 LEG	PIEDE REGOLABILE SDN 30	PIED RÉGLABE SDN 30	GERÄTEFUSS SDN 30
32	660638 02	SDN 35 LEG	PIEDE REGOLABILE SDN 35	PIED RÉGLABE SDN 35	GERÄTEFUSS SDN 35
33	650071 00	ICE SCOOP	SESSOLA	SASSE	EISSCHAUFEL
34	060513 00	KIT WATER SUPPLY PIPE	KIT TUBO ALIM. ACQUA	KIT TUYAU D'ALIM. EAU	WASSER ANSCHLUSSCHLAUCH
35	060513 01	KIT WATER DRAIN PIPE	KIT TUBO SCARICO ACQUA	KIT TUYAU VIDANGE EAU	WASSER SLAUFSCHLAUCH

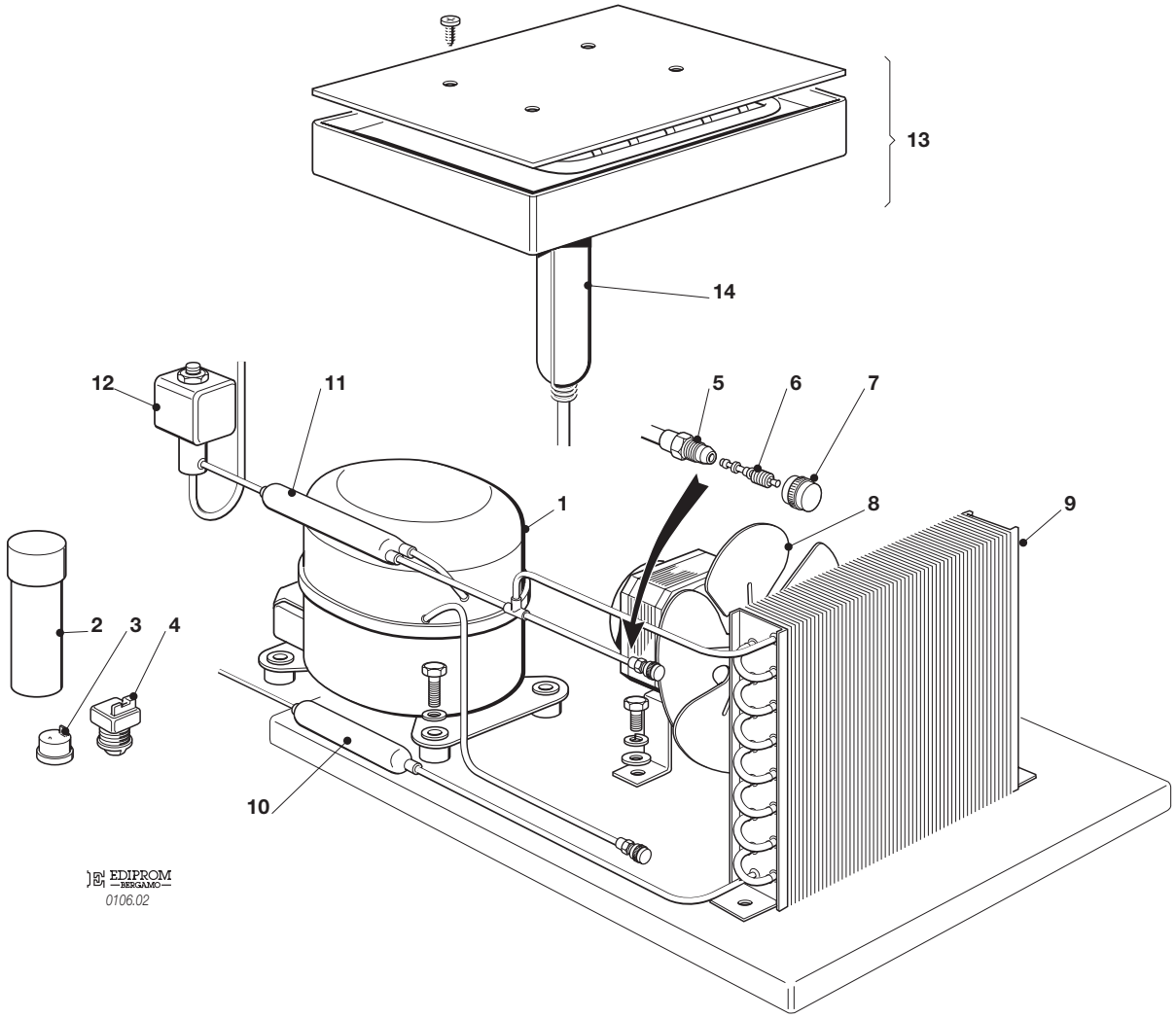
13
14
12
11
5
6
7
1
8
9
2
3
4
10
EDIPROM
BERGAMO
0106.02

SDN 30 - SDN 35 - REFRIGERANT SYSTEM AIR COOLED - SISTEMA REFRIGERANTE RAFFR. AD ARIA
CIRCUIT FRIGORIFIQUE REFROID. PAR AIR - LUFTGEKÜHLT GEFRIERSYSTEM

ITEM NO POS NO REP. NO REF. NO	PART NO CODICE REFERENCE STUECK NR	DESCRIPTION	DESCRIZIONE	DESIGNATION	BESCHREIBUNG
1	670097 08	COMPRESSOR	COMPRESSORE	COMPRESSEUR	KOMPRESSOR
2	620167 35	START CAPACITOR	CAPACITA' D'AVV.	CAPACITE DE DEMARR.	START KONDENSATOR
3	620058 65	PROTECTOR	PROTETTORE	PROTECTEUR	SCHUTZGERAT
4	620057 35	RELAY	RELE	RELAIS	RELAIS
5	650109 00	VALVE BODY	CORPO VALVOLA	CORPS DE VANNE	VENTILGEHAUSE
6	670012 00	VALVE PISTON	PISTONCINO VALVOLA	PISTON	VENTILKOLBEN
7	650106 00	VALVE CAP	CAPPUCCIO VALVOLA	CAPUCHON DE VANNE	VENTILKLAPPE
8	620419 02 620419 32	FAN MOTOR FAN BLADE	MOTOVENTILATORE VENTOLA	MOTO-VENTILATEUR HELICE	LÜFTERMOTOR FLUGEL
9	620285 00 620276 02	AIR COOLED CONDENSER - SDN 30 AIR COOLED CONDENSER - SDN 35	CONDENSATORE AD ARIA- SDN 30 CONDENSATORE AD ARIA- SDN 35	CONDENSEUR - SDN 30 CONDENSEUR - SDN 35	KONDENSATOR - SDN 30 KONDENSATOR - SDN 35
10	630003 05	DRIER	FILTRO DEUMIDIFICATORE	FILTRE DESHYDRATEUR	TROCKNER
11	630137 00	MECHANICAL FILTER	FILTRO MECCANICO	FILTRE MECANIQUE	MECHANISCHFILTERN
12	620306 48 620306 14 620306 22	HOT GAS VALVE COIL HOT GAS VALVE BODY - SDN 30 HOT GAS VALVE BODY - SDN 35	BOBINA VALVOLA GAS CALDO CORPO VALVOLA GAS CALDO - SDN 30 CORPO VALVOLA GAS CALDO - SDN 35	BOBINE VANNE GAZ CHAUD CORP VANNE GAZ CHAUD - SDN 30 CORP VANNE GAZ CHAUD - SDN 35	HEISSGAZ VENTIL SPULE VENTILGEHAUSE - SDN 30 VENTILGEHAUSE - SDN 35
13	784478 00 784479 00	EVAPORATOR ASSY - SDN 30 EVAPORATOR ASSY - SDN 35	ASSIEME EVAPORATORE - SDN 30 ASSIEME EVAPORATORE - SDN 35	ENS. EVAPORATEUR - SDN 30 ENS. EVAPORATEUR - SDN 35	VERDAMPFER - SDN 30 VERDAMPFER - SDN 35
14	784444 09 784444 01	ACCUMULATOR ASSY - SDN 30 ACCUMULATOR ASSY - SDN 35	ASSIEME ACCUMULATORE - SDN 30 ASSIEME ACCUMULATORE - SDN 35	ENS. ACCUMULATEUR - SDN 30 ENS. ACCUMULATEUR - SDN 35	SAMMLER UND SAUGLEITUNGEN - SDN 30 SAMMLER UND SAUGLEITUNGEN - SDN 35

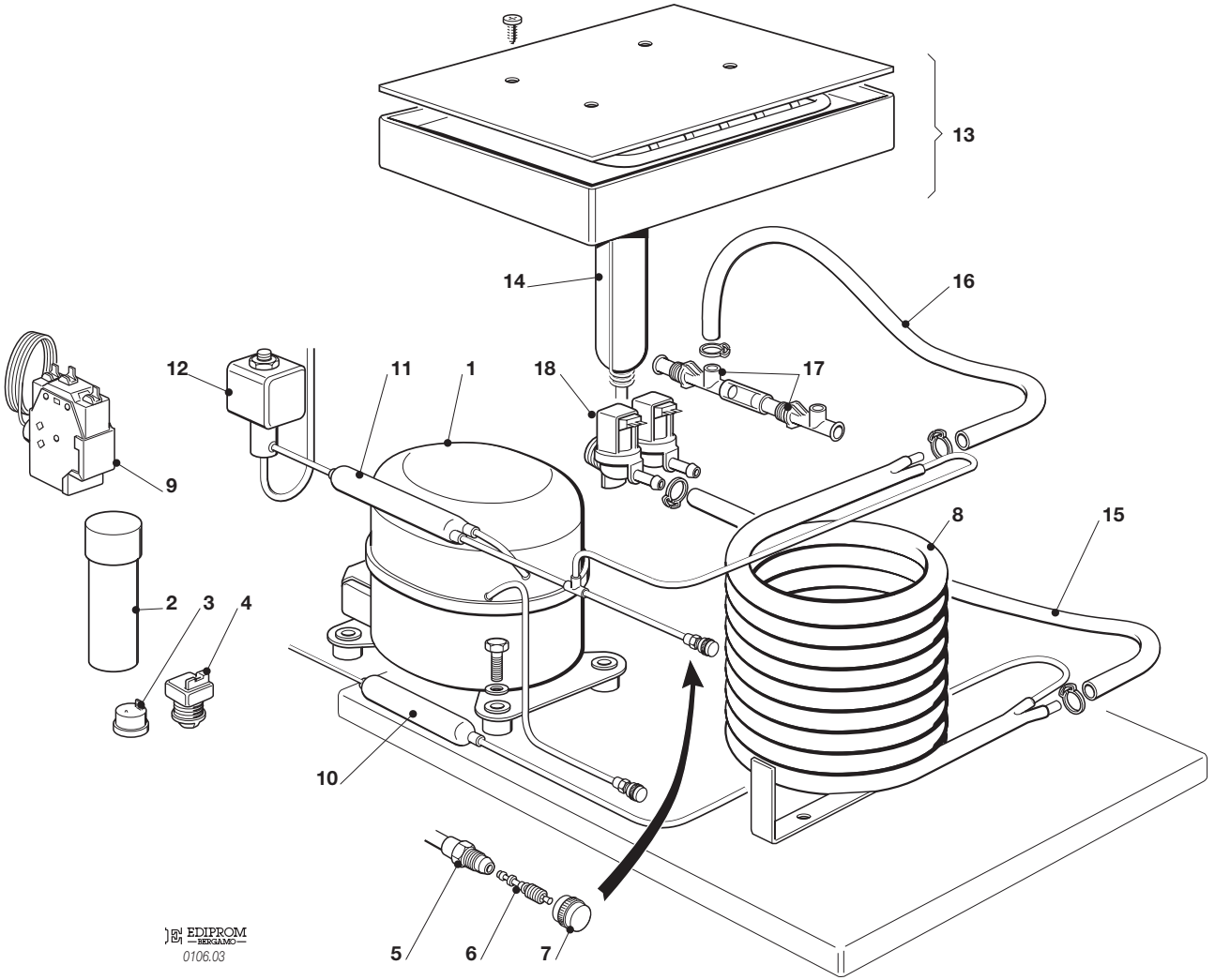
13
14
16
12
11
1
18
17
9
8
15
2
3
4
10
5
6
7
EDIPROM
BERGAMO
0106.03

SDN 30 - SDN 35 - REFRIGERANT SYSTEM WATER COOLED - SISTEMA REFRIGERANTE RAFFR. AD ACQUA CIRCUIT FRIGORIFIQUE REFROID. PAR EAU - WASSERGEKÜHLT GEFRIERSYSTEM

1	670097 08	COMPRESSOR	COMPRESSORE	COMPRESSEUR	KOMPRESSOR
2	620167 35	START CAPACITOR	CAPACITA' D'AVV.	CAPACITE DE DEMARR.	START KONDENSATOR
3	620058 65	PROTECTOR	PROTETTORE	PROTECTEUR	SCHUTZGERAT
4	620057 35	RELAY	RELE	RELAIS	RELAIS
5	650109 00	VALVE BODY	CORPO VALVOLA	CORPS DE VANNE	VENTILGEHAUSE
6	670012 00	VALVE PISTON	PISTONCINO VALVOLA	PISTON	VENTILKOLBEN
7	650106 00	VALVE CAP	CAPPUCCIO VALVOLA	CAPUCHON DE VANNE	VENTILKLAPPE
8	620389 02	WATER C. CONDENSER ASSY	ASS. CONDENSATORE ACQUA	ENS. CONDENSEUR A EAU	WASSER KONDENSATOR GES.
9	620499 01	PRESSURE CONTROL	PRESSOSTATO	PRESSOSTAT	PRESSOSTAT
10	630003 05	DRIER	FILTRO DEUMIDIFICATORE	FILTRE DESHYDRATEUR	TROCKNER
11	630137 00	MECHANICAL FILTER	FILTRO MECCANICO	FILTRE MECANIQUE	MECHANISCHFILTERN
12	620306 48 620306 14 620306 22	HOT GAS VALVE COIL HOT GAS VALVE BODY - SDN 30 HOT GAS VALVE BODY - SDN 35	BOBINA VALVOLA GAS CALDO CORPO VALVOLA GAS CALDO - SDN 30 CORPO VALVOLA GAS CALDO - SDN 35	BOBINE VANNE GAZ CHAUD CORP VANNE GAZ CHAUD - SDN 30 CORP VANNE GAZ CHAUD - SDN 35	HEISSGAZ VENTIL SPULE VENTILGEHAUSE - SDN 30 VENTILGEHAUSE - SDN 35
13	784478 00 784479 00	EVAPORATOR ASSY - SDN 30 EVAPORATOR ASSY - SDN 35	ASSIEME EVAPORATORE - SDN 30 ASSIEME EVAPORATORE - SDN 35	ENS. EVAPORATEUR - SDN 30 ENS. EVAPORATEUR - SDN 35	VERDAMPFER - SDN 30 VERDAMPFER - SDN 35
14	784444 09 784444 01	ACCUMULATOR ASSY - SDN 30 ACCUMULATOR ASSY - SDN 35	ASSIEME ACCUMULATORE - SDN 30 ASSIEME ACCUMULATORE - SDN 35	ENS. ACCUMULATEUR - SDN 30 ENS. ACCUMULATEUR - SDN 35	SAMMLER UND SAUGLEITUNGEN - SDN 30 SAMMLER UND SAUGLEITUNGEN - SDN 35
15	281900 01	PLASTIC TUBE - PER METER	TUBO PVC - PER METRO	TUYAU EN PLASTIQUE - POUR MT.	PLASTIK ROHR - PRO METER
16	281900 01	PLASTIC TUBE - PER METER	TUBO PVC - PER METRO	TUYAU EN PLASTIQUE - POUR MT.	PLASTIK ROHR - PRO METER
17	060545 00	WATER DRAIN FITTING	RACCORDO SCARICO ACQUA	RACCORD EVACUATION EAU	WASSERABFLUSSANSCHLUSSE
18	650105 70 650105 20 650105 21	WATER INLET VALVE FLOW CONTROL ICE FLOW CONTROL COND.	ELETTROVALVOLA DOPPIA CONTROLLO DI FLUSSO GHIACCIO CONTROLLO DI FLUSSO COND.	VANNE ARRIVÉE EAU CONTROLE DE DEBIT GLACE CONTROLE DE DEBIT COND.	ELEKTROVENTIL DURCHFLUSSREGLER EIS DURCHFLUSSREGLER KOND

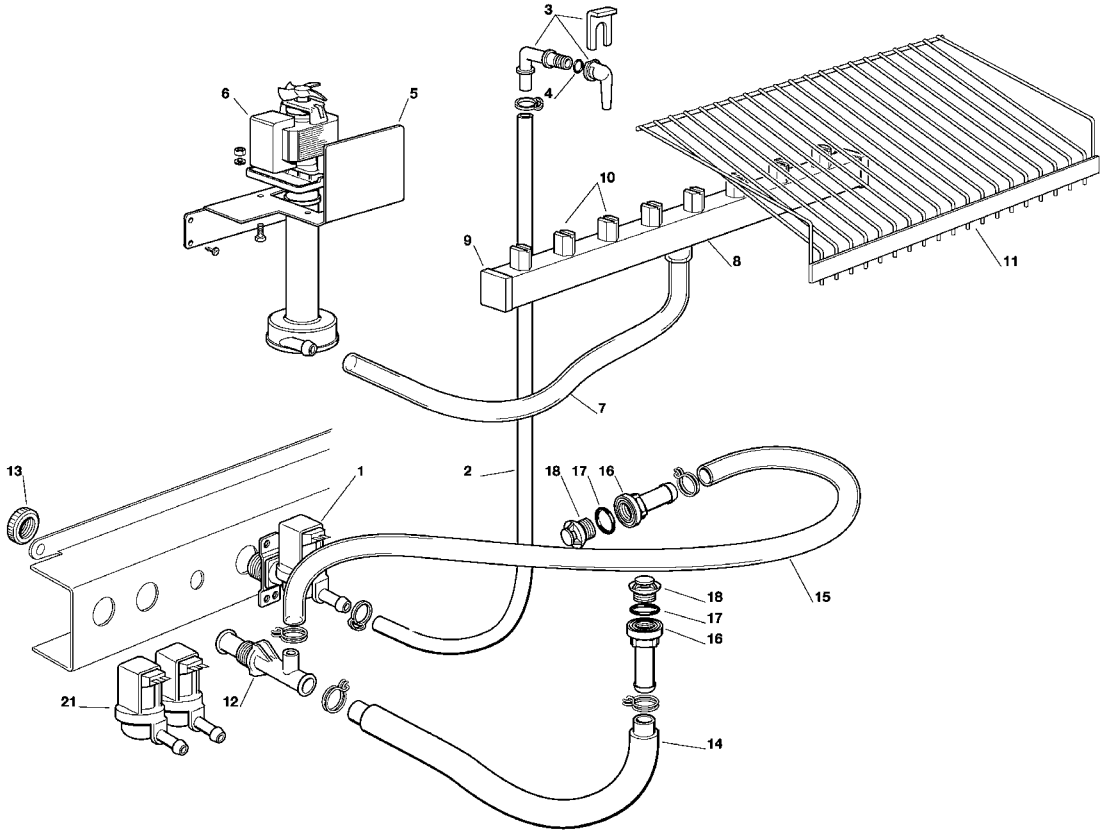
3
4
6
5
10
9
8
11
7
13
1
2
18
17
16
15
18
17
16
21
12
14

SDN 30- SDN 35 - WATER SYSTEM - CIRCUITO IDRAULICO - CIRCUIT HYDRAULIQUE – WASSERSYSTEM -

ITEM NO POS NO REP. NO REF. NO	PART NO CODICE REFERENCE STUECK NR	DESCRIPTION	DESCRIZIONE	DESIGNATION	BESCHREIBUNG
1	650105 66	WATER INLET VALVE - AIR COOLED	ELETTROVALVOLAINGR.ACQUA	ELECTROVANNE ARR. EAU - REFR. AIR	WASSEREINLAUFVENTIL - LUFT
2	281900 01	PLASTIC TUBE - PER METER	TUBO INGRESSO ACQUA	TUYAU EN PLASTIQUE - POUR MT.	PLASTIK ROHR - PRO METER
3	793172 00R	WATER INLET ELBOW ASSY	ASS. INGR. ACQUA A GOMITO	ENS. ENTREE EAU COUDEE	ABGENKELZULAUFROHR
4	640041 31	O-RING	GUARNIZIONE	JOINT TORIQUE	SIMMER RING
5	724332 00	METAL BRACKET	SUPPORTO POMPA	SUPPORT METALLIQUE	METAL TRAEGER
6	620433 00	WATER PUMP	POMPA	POMPE A EAU	WASSER PUMPE
7	610150 03	PUMP INLETWATER PIPE	TUBO MANDATA POMPA	TUYAU EVACUATION	ABFLUSSROHR
8	650665 16 650665 17	SPRAY BAR SDN 30 SPRAY BAR SDN 35	TUBO SPRUZZATORE SDN 30 TUBO SPRUZZATORE SDN 35	COLLECTEUR SDN 30 COLLECTEUR SDN 35	KOLLEKTOR SDN 30 KOLLEKTOR SDN 35
9	660557 00	PLUG	UGELLO SPRUZZATORE	BOUCHON POUR COLLECTEUR	STOPFEN
10	660558 00	SPRAYJET	SPRUZZATORI	GICLEURS	SPROHDOSEN
11	650707 00	ICE DEFLECTOR	GRIGLIA SCORRIMENTO CUBETTI	GRILLE GLiSSEMENT GLAçON	ABGLEITGRILL
12	640134 00	WATER DRAIN FITTING	RACCORDO A "T"	RACCORD EVACUATION EAU	WASSERABFLUSSANSCHLUSSE
13	660211 01	PLASTIC RING NUT	GHIERA	COLLIER DE SERRAGE EN PLAST.	PLASTIKRING MUTTER
14	610148 09	STORAGE BIN DRAIN	TUBO SCARICO CONTENITORE	TUYAU VIDANGE CONTENEUR	BEHALTERAUSLAUFSCHLAUCH
15	610204 00	OVERFLOW DRAIN TUBE	TUBO SCARICO TROPPO PIENO	TUYAU VIDANGE TROP PLAIN	BEHAL TER ABLAUF
16	660219 02	BIN DRAIN	RACCORDO DI SCARICO	RACCORD EVACUATION	ABFLUSSROHR
17	640134 00	O-RING	GUARNIZIONE	JOINT TORIQUE	SIMMER RING
18	660211 01	DRAIN FIL TER	FILTRO SCARICO	FILTRE EVACUATION EAU	ABFLUSSFIL TER
21	650105 70	WATER INL. VAL. - WATER COOLED	ELETTROVALVOLA INGR. ACQUA	ELECTROV. ARR. EAU c REFR. EAU	WASSEREINLAUFVENTIL - WASSER

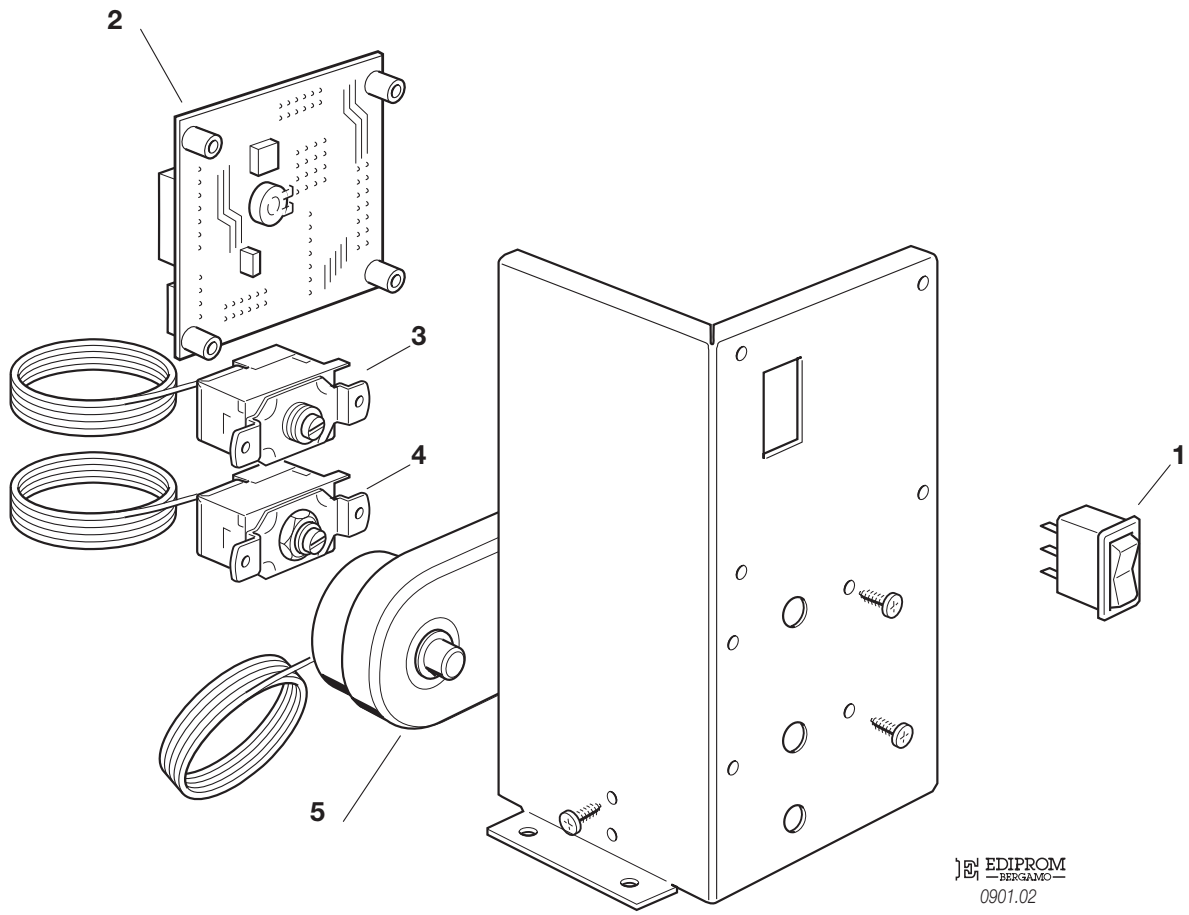

EDIPROM
BERGAMO
0901.02

SDN 30-SDN 35 - CONTROL BOX - SCATOLA DI CONTROLLO - BOITE ELECTRIQUE - SCHALTSCHRANK

ITEM NO POS NO REP. NO REF. NO	PART NO CODICE REFERENCE STUECK NR	DESCRIPTION	DESCRIZIONE	DESIGNATION	BESCHREIBUNG
1	620453 00	SWITCH	INTERRUTTORE LUMINOSO	INTERRUPTEUR LUMINEUX	SCHALTER
2	620507 00	TIMER	TIMER	MINUTERIE	TIMER
3	620201 00	EVAPORATOR THERMOSTAT	TERMOSTATO EVAPORATORE	THERMOSTAT EVAPORATEUR	VERDAMPFERTHERMOSTAT
4	630005 00	BIN THERMOSTAT	TERMOSTATO CONTENITORE	THERMOSTAT CONTENEUR	BEHÄLTER THERMOSTAT
5	620443 02	THERMOSTAT - SAFETY	TERMOSTATO DI SICUREZZA	THERMOSTAT DE SECURITÉ	SICHERHEITS THERMOSTAT

SDN 30-SDN 35 - COMPRESSOR CHART - TABELLA COMPRESSORI - TABLEAU COMPRESSEURS - KOMPRESSOR KARTE

MODEL MODELLO MODELE MODELL	VOLTS VOLTAGGIO TENSION SPANNUNG	COMPRESSOR MODEL MODELLO COMPRESSORE TYPE DU COMPRESSEUR KOMPRESSOR TYP	COMPRESSOR ASSY ASS. COMPRESSORE ENS. COMPRESSEUR NUR KOMPRESSOR	RELAY RELE' RELAIS RELAIS	PROTECTOR PROTETTORE PROTECTEUR SCHUTZGERAT	START CAPACITOR CAPACITA' D'AVV. CAPACITE DE DEMARR. START KONDENSATOR
SD 30 -K-	115/60/1	AEZ 4425 Y	670066 10	620057 49	620058 02	620167 41
SDN 30-35 -K-	230/60/1	AEZ 4425 Y GL 80 TG	670066 08 670097 10	620057 40 620057 64	620058 74 620058 95	620167 01 620167 29
SDN 30-35 -K-	230/50/1	AEZ 4425 Y GL 80 TB	670066 09 670097 08	620057 32 620057 35	620058 64 620058 65	620167 29 620167 29

SD 30-SDN 35 - ELECTRIC COMPONENTS CHART - TABELLA COMPONENTI ELETTRICI TABLEAU COMPOSANTS ELECTRIQUE - ELEKTRISCHEKARTE

MODEL MODELLO MODELE MODELL	VOLTS TENSIONE TENSION SPANNUNG	WATER PUMP POMPA POMPE A EAU WASSER PUMPE	FAN MOTOR ONLY MOTORE VENTILATORE MOTEUR VENTILATEUR LUFTER MOTOR	WATER INLET VALVE VALVOLA INGR. ACQUA V.E.M. ARRIVEE' EAU WASSEREIN. VENTIL	HOT GAS VALVE VALVOLA GAS CALDO V.E.M. GAZ CHAUDS HEISSGAZ VENTIL	TIMER TIMER MINUTERIE TIMER
SDN 30 -K-	115/60/1	620433 04	620419 03	650105 67 / 650105 71 (AIR / WATER)	620306 49	620441 04
SDN 30-35 -K-	230/60/1	620433 01	620419 02	650105 66 / 650105 70 (AIR / WATER)	620306 48	620441 00 / 620441 02 SDN 30/SDN 35
SDN 30-35 -K-	230/50/1	620433 00	620419 02	650105 66 / 650105 70 (AIR / WATER)	620306 48	620441 00 / 620441 02 SDN 30/SDN 35

SIMAG
ICE MACHINES

www.simag.it

SIMAG
via Risorgimento, 4
20017 Mazzo di Rho (MI) - Italy
Tel. +39 02 93900215 (Commerciale - Sales Dept.)
Tel. +39 02 93960357 (Assistenza - Service Dept.)
Fax +39 02 93900226 (Commerciale - Sales Dept.)
Fax +39 02 93960366 (Assistenza - Service Dept.)
e-mail: sales@simag.it
e-mail: service@simag.it

Singapore Office
SIMAG FAR EAST
627A Aljunied Road
04-04 Biztech Centre
Singapore 389842
Tel. ++65 6738 5393
Fax ++65 6738 1959
e-mail: scotsice@singnet.com.sg

Certified ISO 9001
TOTAL QUALITY