FAGOR

FAGOR INDUSTRIAL

DESPIECE TÉCNICO
TECHNICAL PARTS

Lavadoras
Washer extractors



MODELOS
LA-120 TP

Febrero 2016 February



	MUEBLE / CABINET	LÁMINA / DRAWING		FAGOR

ITEM	REFERENCIA REFERENCE	DENOMINACIÓN	DENOMINATION	LA-120 TP							RECOMMENDED	ELIMINADO ELIMINATED	INTRODUCIDO INTRODUCED
1	12021520	COLUMNA ANTERIOR IZDA. 120	LEFT FRONT COLUMN 120	1									
2	12021521	COLUMNA ANTERIOR DCHA. 120	RIGHT FRONT COLUMN 120	1									
3	12023483	PARACHOQUES 55KG	BUMPER 55KG	1									
4	12021546	ZOCALO 120	SKIRTING 120	1									
5	12021519	PANEL LATERAL SUPERIOR 120	SIDE TOP PANEL 120	1									
6	12021526	ENCIMERA 120	WORKTOP 120	1									
7	12021510	COLUMNA POSTERIOR 120	REAR COLUMN 120	1									
8	12021581	PORTAMANDOS 120	CONTROL HOLDER 120	1									
9	12021617	PANEL POST. VALVULAS 120	VALVES REAR PANEL 120	1									
10	12021592	PANEL POST. INTERMEDIO 120	REAR MIDDLE PANEL 120	1									
11	12021616	PANEL VACIADO 120	DRAIN PANEL 120	1									
12	12021538	PANEL LATERAL INFERIOR 120	LOWER SIDE PANEL 120	4									
13	12010070	TOR. M8X20 ISO 7380 A2	SCREW M8X20 ISO 7380 A2	15									
14	12007975	ADHESIVO SUPERIOR LA-120	TOP ADHESIVE LA-120	1									
15	12120238	SOPORTE SETA EMERGENCIA	EMERGENCY STOP SUPPORT	1							X		
16	12120237	PULSAD. 250V AC 16A 1VIA 2POS UL	250V AC 16A 1WAY 2POS UL SWITCH	1							X		
17	12120235	SETA DE EMERGENCIA	EMERGENCY STOP BUTTON	1							X		
18	12115334	ADHESIVO COLUMNAS TP FAGOR	COLUMN ADHESIVE TP FAGOR	1							X		
19	12120561	CHAPA VISUALIZADOR TP COMPL.	COMPLETE DISPLAY TP SHEET	1									
20	12119488	DISPLAY TP	DISPLAY TP	1							X		
21	12120404	TARJETA DISPLAY TFT	TFT DISPLAY CARD	1							X		
22	12116871	CABLEADO LATIGUILLO USB	USB WIRE	1									
23	12119993	CABLE DVI-D (Dual Link) (M-M, 2M)	DVI-D WIRE (Dual Link) (M-M, 2M)	1									
24	12119954	TAPON USB	USB CAP	1									
25	12023335	VALVULA 4" IZQUIERDA	4" LEFT VALVE	1							X		

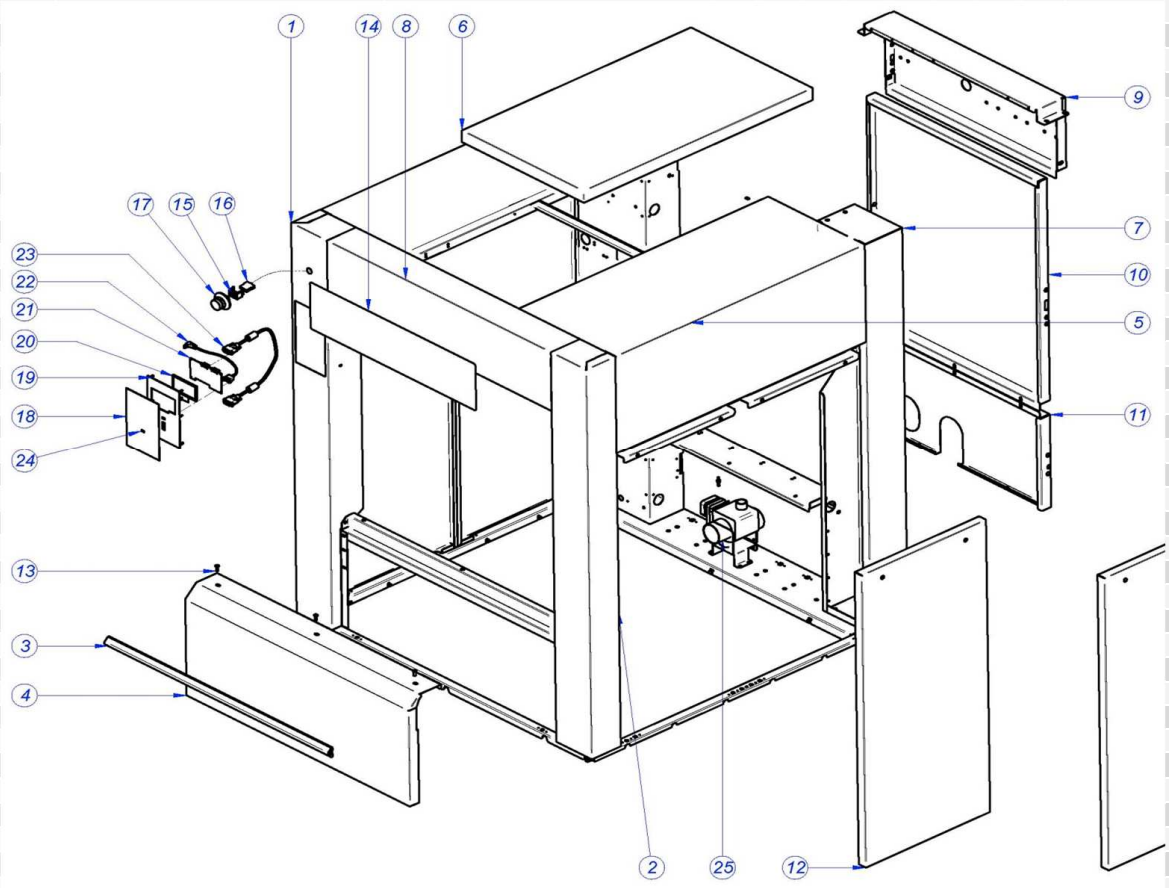

	PUERTA / DOOR	LÁMINA / DRAWING		FAGOR

ITEM	REFERENCIA REFERENCE	DENOMINACIÓN	DENOMINATION	LA-120TP							RECOMMENDED	ELIMINADO ELIMINATED	INTRODUCIDO INTRODUCED
1	12039002	PUERTA COMPLETA 120(2)	COMPL. DOOR 120(2)	1									
2	12025085	VARILLA ROSCADA PUERTA 120	DOOR THREADED ROD 120	6									
3	12010111	TUERCA EXAGONAL M10 INOX.	HEXAGONAL NUT M10 INOX.	12									
4	12038943	PUERTA PISADOR COMPLETO	COMPL. DOOR HOLD-DOWN	1									
5	12045077	PISADOR JUNTA PUERTA 120	HOLD-DOWN DOOR SEAL 120	1									
6	12023276	JUNTA CRISTAL 120	GLASS SEAL 120	1									
7	12023228	CRISTAL PUERTA 120	GLASS DOOR 120	1									
8	12010143	TUER.SOMB.M6	CAP NUT M6	10									
9	12025100	CASQUILLO "SELFOIL 16-22-25	SELFOIL BUSHING 16-22-25	4									
10	12023312	EJE BISAGRA	HINGE SHAFT	2									
11	12023421	BISAGRA PUERTA (2)	DOOR HINGE (2)	2									
12	12010077	ARAND 27X12,5X2,5HIER	WASHER 27X12,5X2,5HIER	4									
13	12010069	TOR.EX.M12X40 H.ZINCADO	HEX.SCREW.M12X40 H.ZINC	4									
14	12023072	CALZO BISAGRA 60,40	HINGE WEDGE 60,40	8									
15	12024978	CASQUILLO SELFOIL DE VALONA	VALONA SELFOIL BUSHING	1									
16	12023226	EJE PUERTA 40/60	DOOR SHAFT 40/60	1									
17	12010264	VARILL. ROSC. EXTR. CON. M6X	THREAD. ROD CON. END M6X	1									
18	12009934	ARAND. SEG. A24 DIN6799 INOX	SAFETY WASHER A24 DIN6799 INOX	1									
19	12024968	EJE LEVA PUERTA 60/40	DOOR CAM SHAFT 40/60	1									
20	12009957	TUER.EXA.M16	HEX NUT M16	1									
21	12025162	CASQUILLO ENGANCHE	HOOK BUSHING	1									
22	12023355	SUPLEMENTO EJE LEVA 40/60	SUPLEMENT CAM SHAFT 40/60	1									
23	12023491	PALANCA LEVA 120	CAM LEVER 120	1									
24	12023309	MANGO PUERTA 120	DOOR HANDLE 120	1									
25	12023078	SOPORTE GOMA 120	RUBBER SUPPORT 120	6									
26	12023436	JUNTA PUERTA 120	DOOR SEAL 120	1									
27	12010251	TUER.AUTOB.M6	SELF-LOCK.NUT.M6	6									
28	12021951	SEPARADOR CRISTAL	GLASS SEPARATOR	8									
29	12023119	PISADOR CRISTAL	GLASS HOLD-DOWN	8									

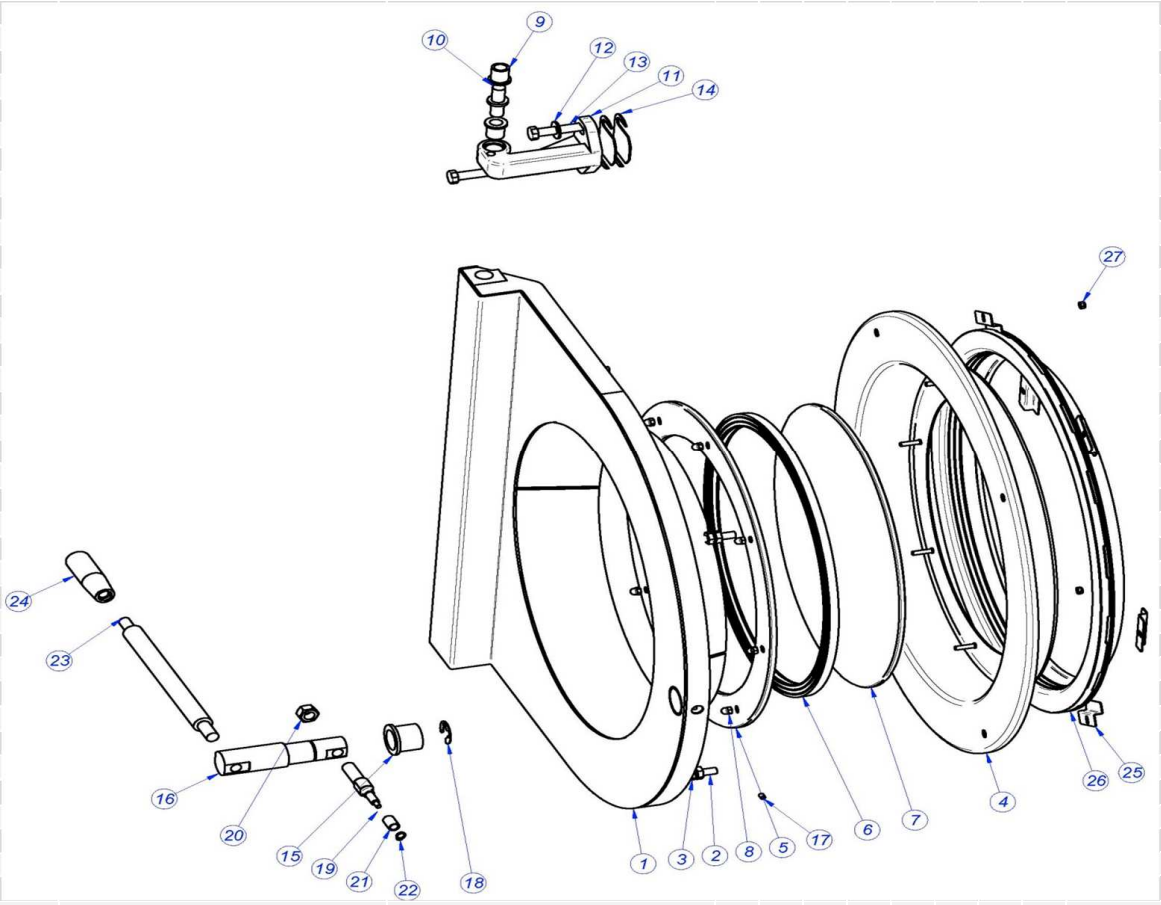

	CIERRE / LOCK	LÁMINA / DRAWING		FAGOR

ITEM	REFERENCIA REFERENCE	DENOMINACIÓN	DENOMINATION	LA-120 TP							RECOMMENDED	ELIMINADO ELIMINATED	INTRODUCIDO INTRODUCED
1	12009944	ARANDELA A5	WASHER A5	4									
2	12001575	PROTECTOR CONEX CIERRE 120	CLOSURE CONNECTIO. GUARD	1									
4	12023211	ELECTROIMAN PUERTA	DOOR ELECTROMAGNET	1							X		
5	12010247	TORN.ALOM.M3X20	CURVED SCREW.M3X20	4									
6	12009882	ARAND.ABAN. A6 A.304	WASHER A6 A.304	4									
7	12023384	EJE BLOQUEO 40,60,120	LOCKING SHAFT 40,60,120	1									
8	12009840	ARAND.ABAN. A8 A.304	FAN WASHER A8 A.304	4									
9	12010148	TORN.AMAR.M6X13 A304	FASTENING SCREW M6X13 A304	2									
10	12024868	LEBA CIERRE 40,60,120	LEBA CLOSURE 40,60,120	1									
11	12010177	TORN.EXA. M6X30 A.304	HEX BOLT M6X30 A.304	2									
12	12007779	BASE CIERRE 40,60,120	CLOSURE BASE 40,60,120	1									
13	12010097	TORN.EXA. M8X30	HEX BOLT M8X30	4									
14	12010186	TORN.EXA. M6X15	HEX BOLT M6X15	2									
15	12025182	DESBLOQUEO	UNLOCK	1									
16	12010216	TORN. ALLEN M2.5x5	BOLT, ALLEN M2.5x5	2									
17	12010268	ARANDELA A8	WASHER A8	4									
18	12138167	BLOQUEO CIERRE 40,60,120	CLOSURE LOCK 40,60,120	1							X		
19	12021713	TAPA CIERRE 120	LOCK COVER 120	1									
20	12025218	INTERRUPTOR PUERTA PLANO	FLAT DOOR SWITCH	2							X		
21	12001286	SOPORTE CIERRE 120	CLOSURE SUPPORT 120	1									

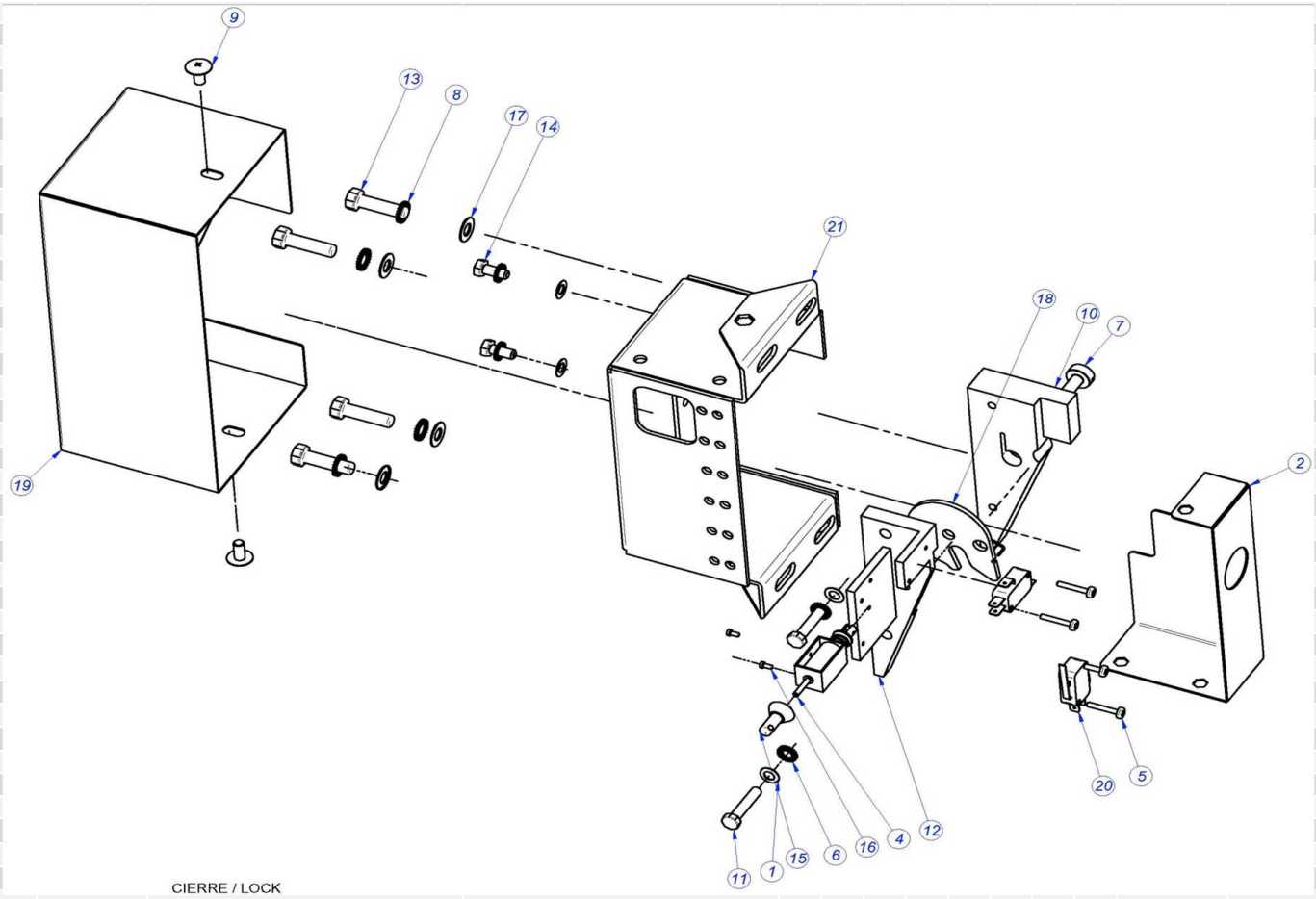

CIERRE / LOCK

	ARMAZON / FRAME	LÁMINA / DRAWING		FAGOR

ITEM	REFERENCIA REFERENCE	DENOMINACIÓN	DENOMINATION	LA-120 TP							RECOMMENDED	ELIMINADO ELIMINATED	INTRODUCIDO INTRODUCED
1	12023275	ARMAZON 120	FRAME 120	1									
2	12023257	PATA RIGIDA 60	RIGID LEG	4									
4	12010182	TUE.EX.AUT.M10 8.8 ZIN	HEX. SCREW. AUT. M10 8.8 ZIN	10									
5	12009849	TORNILLO EXAG.M.20x110	HEXAGONAL SCREW M.20x110	4									
6	12009952	TUERCA EXAG.AUTOBL.M.20	HEX.SCREW.AUT.M20	10									
7	12024865	ANCLAJE 120	ANCHORAGE 60	3									
8	12009861	TORNILLO EXAG.M.20x80	HEXAGONAL SCREW M.20x80	2									
9	12023467	CASQUILLO AMORTIGUADORES	SHOCK ABSORBER BUSHING	32									
10	12010125	ARANDELA A21	WASHER A21	20									
11	12025004	PASADOR MUELLE 120	SPRING SAFETY 120	6									
12	12010137	PASADOR DE ALETAS 3 X 50	FIN SAFETY 3 X 50	12									
13	12049230	AMORTIGUADOR LF-120	SHOCK ABSORB. LF-120	8							X		
14	12025076	AMORTIGUADOR 250N SUSPA	SHOCK ABSORB. 250N SUSPA	8							X		
15	12009991	TORN.EXAG.M10X110	HEXAGONAL SCREW M.10x110	6									
16	12010235	ARANDELA A10	WASHER A10	19									
17	12009921	EXAG. M10X150(8.8) DIN931	HEXAG. M10X150(8.8) DIN931	2									
18	12023114	SOP. MICRO DESEQUILIBRIO 120	UNBALANCE MICRO SUPPORT. V2	1									
19	12024588	FINAL DE CARRERA VARILLA	FIN DE CARRERA DIPSTICK	1									
20	12023063	RANURA MICRO DESEQUILIBRIO	UNBALANCE MICRO HOLE	1									

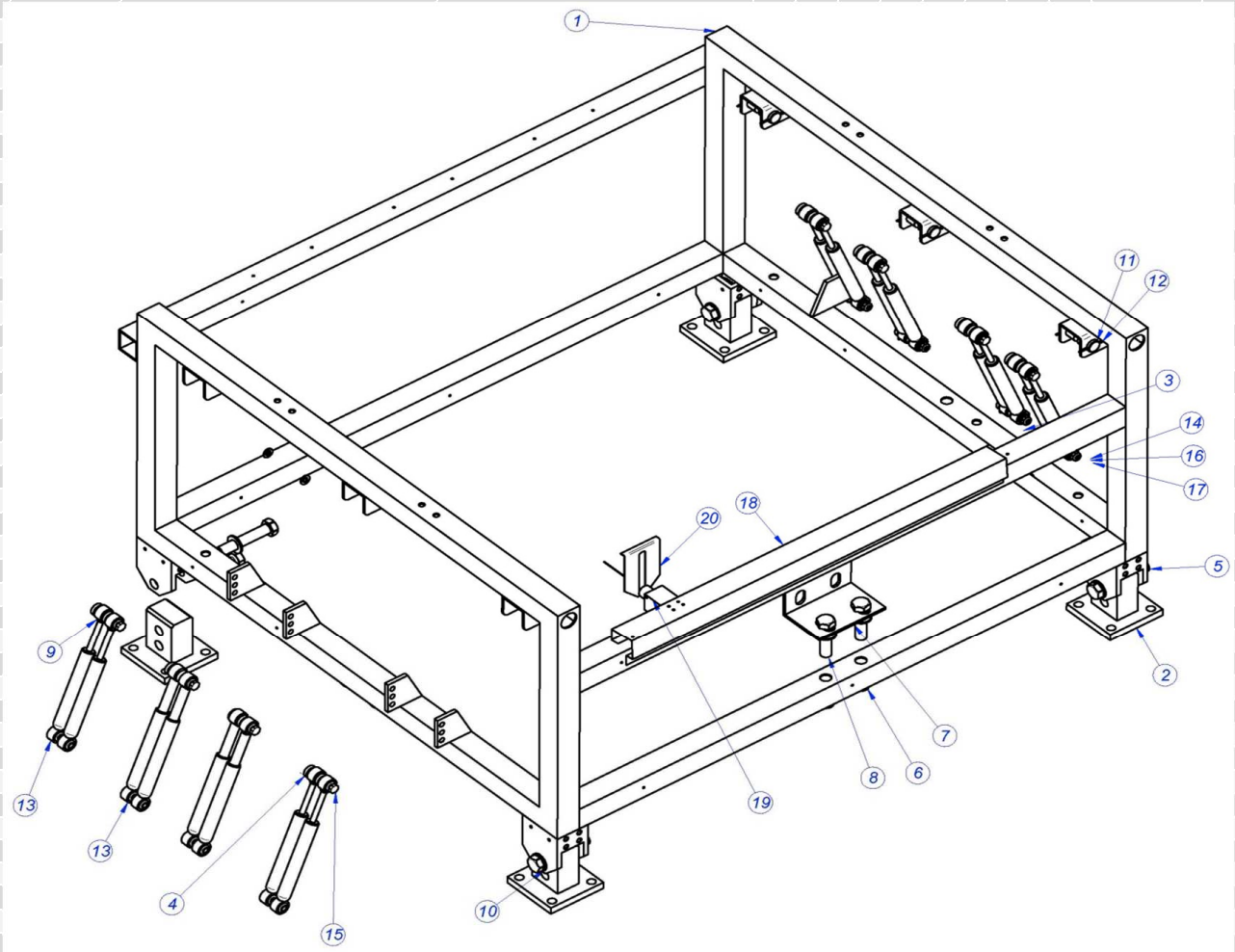

	CUNA / CRADLE	LÁMINA / DRAWING		FAGOR

ITEM	REFERENCIA REFERENCE	DENOMINACIÓN	DENOMINATION	LA-120 TP							RECOMMENDED	ELIMINADO ELIMINATED	INTRODUCIDO INTRODUCED
1	12023258	CUNA COMPLETA 120	COMPLETE CRADLE 120	1									
2	12023186	CONTRAPESO MOTOR 120	MOTOR COUNTERWEIGHT 120	1									
3	12009832	TORN.EXA. M16x130	HEX. SCREW M16x130	4									
4	12010102	ARANDELA A16 DIN 125	WASHER A16 DIN 125	12									
5	12010061	TUERCA EXAG.AUTOBL.M.16	HEX. BOLT.AUTOBL.M.16	6									
6	12010061	TOR.EX.M12X35 H.ZINCADO	HEX. SCREW M12X35 H.ZINCADO	3									
7	12009917	TORN. EXAG.M.16X80 DIN 933	HEX SCREW M.16X80 DIN 933	2									
8	12025004	PASADOR MUELLE 120	SPRING PIN 120	6									
9	12010144	TUE.EX.AUT.M12 H.ZINCADA	HEX. BOLT AUT.M12 H.ZINCADA	22									
10	12010137	PASADOR DE ALETAS 3 X 50	COTTER PIN 3 X 50	24									
11	12023362	MUELLE LF-120	SRING LF-120	6									
12	12024891	CORREA SPB 120	BELT SPB 3000	4							X		
13	12023368	PLACA SOPORTE MOTOR 120	MOTOR SUPPORT PLATE120	1									
14	12023471	PLETINA MOTOR 120	MOTOR PLATEN 120	2									
15	12023231	MOTOR 15KW	MOTOR 15KW	1							X		
16	12024861	POLEA MOTOR SPB/B 140-4	MOTOR PULLEY SPB/B 140-4	1									
17	12023392	CINTA LARGA SOPORTE CUBA120	TUB SUPPORT LONG TAPE 120	2									
18	12023405	CINTA CORTA SOPORT. CUBA 120	TUB SUPPO. SHORT TAPE120	2									
19	12009992	TORNILLO EXAGONAL M10X80	HEX SCREW M10X80	1									
21	12025056	TAPER BUSH MOTOR 2012-42	TAPER BUSH MOTOR 2012-42	1									
22	12010069	TOR.EX.M12X40 H.ZINCADO	HEX. SCREW M12X40 H.ZINCADO	16									
23	12010125	ARANDELA A21	WASHER A21	4									
24	12009849	TORNILLO EXAG.M.20x110	HEX. SCREW M.20x110	2									
25	12009952	TUERCA EXAG.AUTOBL.M.20	HEX. BOLT AUTOBL.M.20	2									
26	12009955	TOR. AVELLANADO M12x40	COUNTERSU. SCREW M12x40	6									
27	12101476	VENTIL. + SOP. MOTOR 120	FAN + FAN SUPP. 120 MOTOR	1							X		
S/Nº	12095624	VENTILADOR 230V AC	FAN 230V AC	1									
S/Nº	12095627	SOPORTE VENTILADOR	FAN SUPPORT	1									

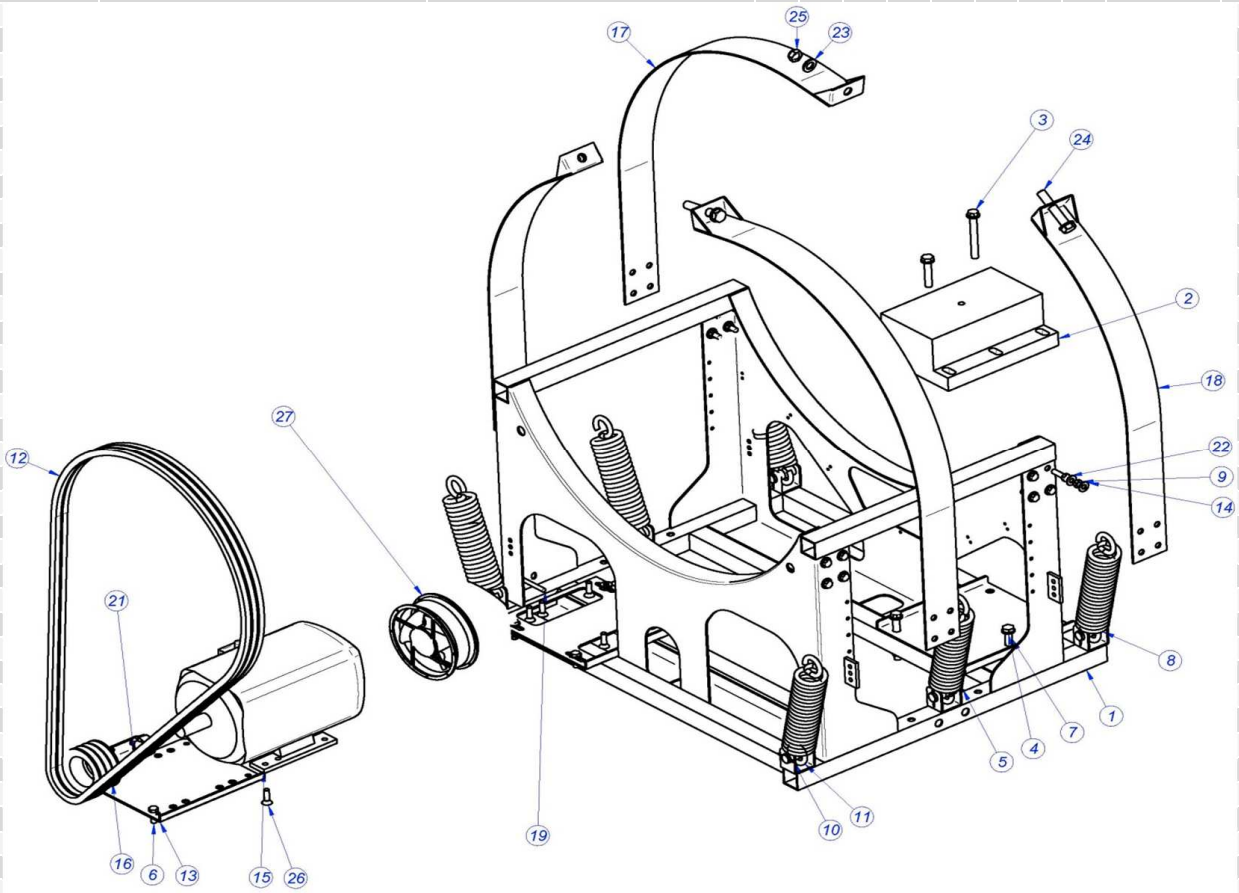

	CUBA / TUB	LÁMINA / DRAWING		FAGOR

ITEM	REFERENCIA REFERENCE	DENOMINACIÓN	DENOMINATION	LA-120 TP							RECOMMENDED	ELIMINADO ELIMINATED	INTRODUCIDO INTRODUCED
1	12010144	CUBA COMPLETA 120	COMPLETE TUB 120	1									
2	12023240	CONTRAPESO ANTERIOR 120	FRONT COUNTERWEIGHT 120	1									
3	12000195	FRENTE CUBA 120 COMPL.	COMPLETE TUB FRONT 120	1									
4	12010268	ARANDELA A8	WASHER A8	6									
5	12009840	ARAND.ABAN. A8 A.304	SPEC. WASHER A8 A.304	12									
6	12010056	TOR.EX.M8X40	HEX. SCREW M8X40	6									
7	12023363	ANILLO CUBA 120 COMPL.	COMPLETE TUB RING 120	4									
8	12010061	TUERCA EXAG.AUTOBL.M.16	HEX. BOLT AUTOBL. M16	50									
9	12009918	TORNILLO EXAG.M.16X70	HEX. SCREW M16X70	67									
10	12023403	GANCHO CUBA 120	TUB HOOK 120	2									
11	12023180	SOPORTE FONDO CUBA 120	TUB BASE SUPPORT120	1									
12	12093641	SOPORTE RODAMIENTOS 120	BEARING SUPPORT 120	1									
12A	12092890	KIT SOPORTE + RODAM 120	KIT SUPPORT + BEARINGS 120	1							X		
13	12021480	RODAMIENTO 140/300/62	BEARING 140/300/62	1									
13A	12038356	KIT RODAMIENTOS	BEARING KIT	1									
14	12021485	RODAMIENTO 22317 EK	22317 EK BEARING	1									
14A	12130418	MANGUITO RODAM. H 2317 LA-120	BEARING ADAPETER SLEEVE H 2317	1									
15	12021799	TAPA SOP. RODAMIENTOS 120	BEARING COVERS 120	1									
16	12009712	JUNTA TAPA RODAMIENTOS 120	BEARING COVERS SEAL 120	1									
19	12024965	ANILLO SEGURIDAD 180 DIN 472	SECURITY RING 180 DIN 472	1									
20	12023277	CASQUILLO RETENES 120	RETAINER CAP 120	1									
21	12009778	RACOR RAPIDO 1/4 - 6	QUICK CONNECTOR 1 / 4 - 6	1									
22	12010050	TORN. EXAG. M8X50 AISI 304	HEX. SCREW M8X50 AISI 304	5									
23	12021504	PANEL FRONTAL 120	FRONT PANEL 120	1									
24	12023395	RETEN RADIAL BAUMX7 VITON	RETAINER BAUMX7 VITON	2									
25	12024908	JUNTA TORICA 315 X 6	O-RING Ø 315 X 6	1									
26	12024976	JUNTA TORICA 224 X 6	O-RING Ø 224 X 6	1									
27	12091101	ARANDELA SEG. TORN. SOP. 120	SECURITY WASHER SUP. 120	24									
28	12004137	FONDO CUBA 120 COMPL.	COMPLETE TUB BASE 120	1									
29	12009918	TORN.EXA. M16X70MM DIN933	HEX. SCREW M16X70MM DIN933	24									
30	12009865	TORN.EXA. M16X150MM DIN931	HEX. SCREW M16X150MM DIN931	2									
31	12023393	ENGRASADOR SOP. ROD.	BEARING SUPPORT NIPPLE	1									
32	12128218	TAPON CUBA 1" G	TUB CAP 1" G	1									
33	12025065	CASQUILLO POSICION CUBA 60	POSITION BUSHING TUB 60	2									
34	11000420	JUNTA CUBA 18	TUB JOINT 18	3							X		
35	11000159	PERFIL JUNTA CUBA 120/60/40	TUB JOINT PROFIL 60	10									
36	12025036	SONDA 64KOHMIO NTC	64KOHM NTC PROBE	1									
37	12096597	TERM_SEG_261B_110ºC_FAST_90	SAFETY THER. 261B_110ºC_FAST_90	1							X		
S/N	11000163	TUBO NEUM.4x2.5	PNEUMATIC TUBE 4X2.5	5									
S/N	11000112	TUBO NEUM.6X4	PNEUMATIC TUBE 6X4	2									

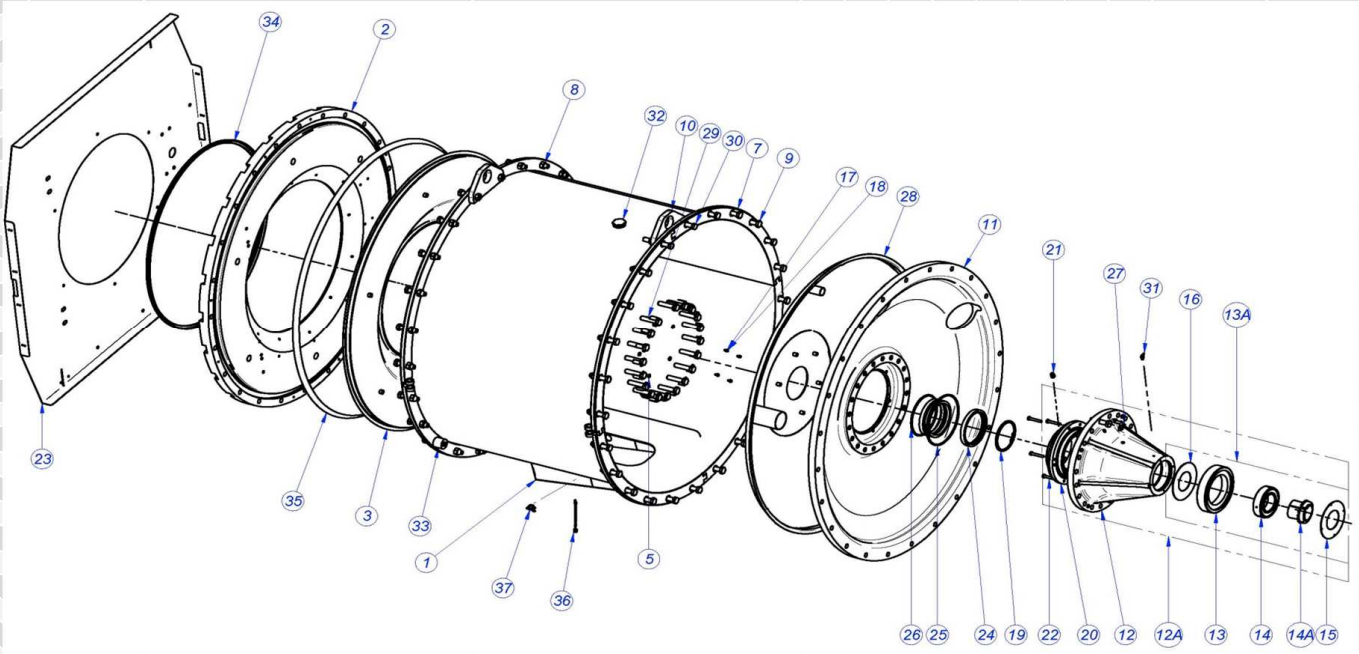

	TAMBOR / DRUM	LÁMINA / DRAWING		FAGOR

ITEM	REFERENCIA REFERENCE	DENOMINACIÓN	DENOMINATION	LA-120 TP							RECOMMENDED	ELIMINADO ELIMINATED	INTRODUCIDO INTRODUCED
1	12004157	TAMBOR 120 COMPLETO	DRUM 120 COMPLETE	1									
2	12023316	GUIA RODAMIENTO 120	BEARING GUIDE 120	1									
3	12009968	JUNTA TORICA Ø INT 105X5	O-RING SEAL Ø INT. 105X5	1									
4	12025197	ANILLO SEGURIDAD 105 DIN 471	SAFETY RING 105 DIN 471	1									
6	12023192	POLEA TAMBOR 120	DRUM PULLEY 120	1									
7	12024993	RETEN V-RING VA 100	RETAINER V-RING VA-100	1									
8	12023210	BUJE DE FIJACION 120	PULLEY TAPER BUSH 120	1									
9	12025268	ANILLO SEGURIDAD 65	SAFETY RING 65	1									
10	12007793	CASQUILLO EJE 120	AXIS BUSHING 120	1									
11	12007916	JUNTA TORICA Ø INT 140 X 5	O-RING SEAL Ø INT. 140 X 5	1									

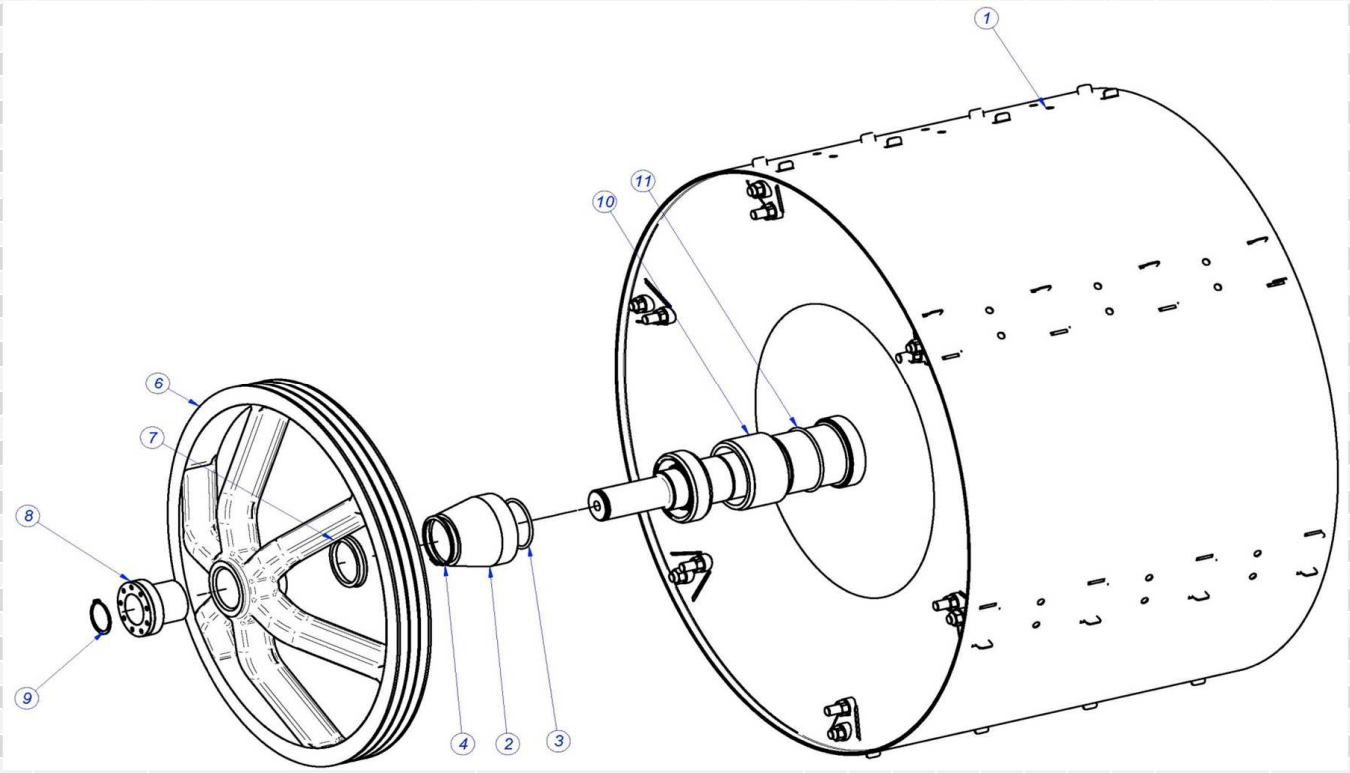

	CONJUNTO DESAGÜE / DRAINAGE SET	LÁMINA / DRAWING		FAGOR

ITEM	REFERENCIA REFERENCE	DENOMINACIÓN	DENOMINATION	LA-120 TP							RECOMMENDED	ELIMINADO ELIMINATED	INTRODUCIDO INTRODUCED
1	12021555	T 4" 120	T 4" 120	1									
3	12023335	VALVULA 4" IZQUIERDA	LEFT VALVE 4 "	1									
4	12021591	SALIDA DESAGUE 120	DRAINAGE OUTLET	1									
5	12003476	TAPA DESAGUE 120 COMPLETO	DRAINAGE COVER 120 COMPL.	1									
6	12025110	JUNTA TORICA 2-434 142.24x7	O-RING SEAL 2-434 142.24x7	1									
7	12009682	EMPALME 4"	CONNECTION 4"	2									
8	12023346	FUELLE TUBO VACIADO 120	EMPTYING BELLOWS PIPE	1									
9	12047653	CAÑA INOX. DESAGÜE 120	CANE INOX. DRAIN 120	1									
10	12047661	ABRAZADERA REFOR. M8 115 ZINC.	REFOR. CLAMP M8 115 ZINC.	1									
11	12025017	CONDUCTO DOSIFICADOR CUBA	TUB DISPENSER PIPE	1									
12	12024592	CODO INOXIDABLE Ø73*70	INOXID. ELBOW Ø73*70	1									
13	12023628	CONDUCTO VACIADO LC-LF 25	EMPTYING PIPE LC-LF 25	1									
14	12025098	JUNTA CASQ. RETENES 10,13 V2	SEAL RETAINER CAP 10,13 V2	1									
15	12047672	ABRAZADERA S 110-130 DIN 3017	CLAMP S 110-130 DIN 3017	6									
	19004748	KIT DOBLE DESAGÜE 120	DOUBLE DRAINING KIT 120										

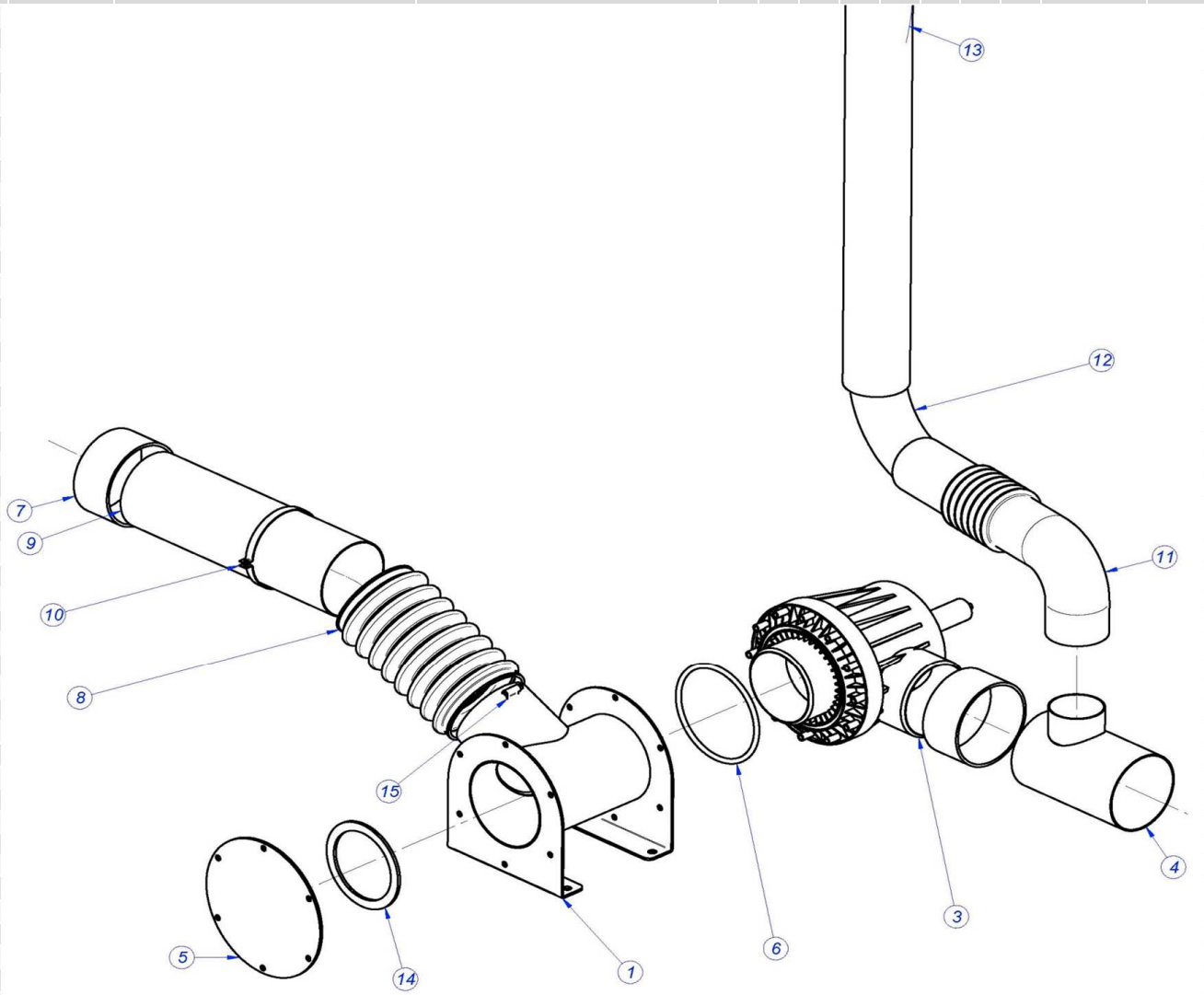

	SOPORTE E.V. / SOLENOID VALVE SUPPORT	LÁMINA / DRAWING		FAGOR

ITEM	REFERENCIA REFERENCE	DENOMINACIÓN	DENOMINATION	LA-120 TP HW	LA-120 TP S						RECOMMENDED	ELIMINADO ELIMINATED	INTRODUCIDO INTRODUCED
1	12021617	PANEL POST. VALVULAS 120	REAR PANEL VALVES 120	1	1								
2	12023339	VALVULA VAPOR 1 1/4"	STEAM VALVE 1 1/4"	_	1								
3	12025000	GM 2020 UNION GAS 11/4" 11/4	UNION GAS GM 2020 11/4" 11/4	_	1								
4	12023336	VALVULA NEUMATICA 1" 1/2	PNEUMATIC VALVE 1" 1/2	3	3								
S/Nº	12009781	CODO 1/8" Ø 4	ELBOW 1/8" Ø 4	4	4								
5	12024929	RACOR-MANGUERA 1"1/2	CONNECTION-HOSE 1"1/2	3	3								
6	12021866	SOPORTE VALVULA 1 1/2	VALVE SUPPORT 1 1/2	3	3								
7	12024952	GM 2020 UNION GAS 11/2" 11/2	UNION GAS GM 2020 11/2" 11/2	3	3								
8	12021865	SOPORTE VALVULA 1 1/4	VALVE SUPPORT 3/4 1 1/4	_	1								
9	12021541	TUBO ENTRADAS DE AGUA 1 1/2	WATER INTAKE PIPE 1 1/2	1	1								
10	12023245	CONDUCTO DESAGUE 8	DRAINAGE PIPE 8	1	1								
11	12021548	EMPALME DOSIFICADOR 120	DOSING CONNECTION 120	1	1								
11A	12024507	TAPON DOSIFICADOR	DOSING CAP	7	7								
12	12023297	MANGUITO 1 1/4"	HOSE 1 1/4"	_	2								
13	12023184	LATIGUILLO VAPOR 120	STEAM LINE 120	_	1								
14	12021528	INYECTOR VAPOR 120	STEAM INJECTOR 120	_	1								
15	12007746	CONDUCTO DOSIFICA. CUBA 40-60	TUB DISPENSER PIPE 40-60	1	1								
16	12025009	ARANDELA TEFLON 38X30X4	WASHER TEFLON 38X30X4	2	4								
17	12007766	CONDUCTO SALIDA VAPOR	STEAM OUTLET PIPE	1	1								

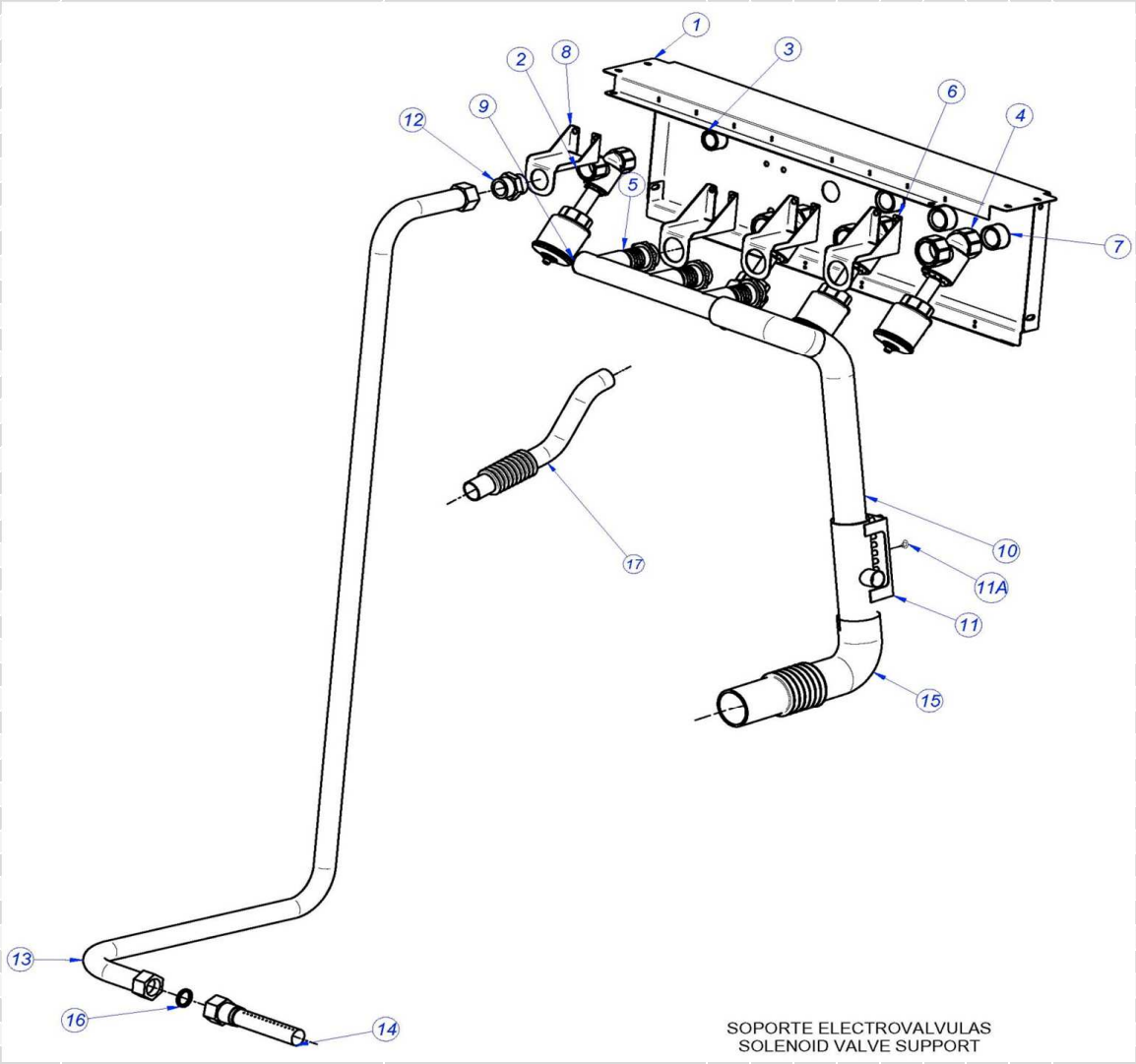

SOPORTE ELECTROVALVULAS
SOLENOID VALVE SUPPORT

	SOPORTE E.V. / SOLENOID VALVE SUPPORT	LÁMINA / DRAWING		FAGOR

ITEM	REFERENCIA REFERENCE	DENOMINACIÓN	DENOMINATION	LA-120 TP							RECOMMENDED	ELIMINADO ELIMINATED	INTRODUCIDO INTRODUCED
1	12023222	CUBETERA LF-55	TRAY LF-55	1									
2	12023324	CUBETA DETERGENTES LF-55	DETERGENT TRAY LF-55	2									
3	12023326	CUBETA LIQUIDOS LF-55	LIQUID TRAY LF-55	3									
4	12023701	TUBO SIFON	SIPHON PIPE	3									
5	12022260	PASAMUROS COMPLETO	COMPLETE BUSHING	5									
6	12010159	JUNTA DE GOMA 3031986	RUBBER SEAL 3031986	5									
7	12009864	TUERCA 16X1,5	NUT 16X1.5	5									
8	12025092	EJE CIERRE CUBETERA	TRAY CLOSURE SHAFT	1									
9	12025095	CASQUILLO SEPARADOR CIERRE	CLOSURE SEPARATOR BUSHING	1									
10	12024461	MANGO CUBETERA	TRAY HANDLE	1									
11	12010187	MANGUITO SUJ.3X12 DIN1481	HOSE FAST. 3X12 DIN1481	1									
12	12009944	ARANDELA A5	WASHER A5	11									
13	12010251	TUER.AUTOB.M6	SELF-LOCK.NUT.M6	11									
14	12003705	PUERTA CUBETERA COMPLETA	COMPLETE TRAY DOOR	1									
14A	12009675	JUNTA PUERTA CUBETERA	TRAY DOOR SEAL	1									
15	12023589	TOPE CRISTAL INTERIOR	INTERIOR GLASS BUFFER	2									
16	12003380	BISAGRA CUBETERA IZDA. COMPL	LEFT TRAY HINGE COMPL.	1									
17	12003369	BISAGRA CUBETERA DCHA. COMPL	RIGHT TRAY HINGE COMPL.	1									
18	12010267	ARANDELA 16X6X1.2 A.304	WASHER 16X6X1.2 A.304	4									
19	12009890	ARANDELA ABANICO A5 A.304	WASHER A5 A.304	4									
20	12010221	TORN.EXA. M5X15 A.304	HEX BOLT M5X15 A.304	4									
21	12009914	ABRAZADERA 70-90	CLAMP 70-90	2									
22	12007746	CONDUCTO DOSIFICADOR CUBA	FILLER PIPE LC-LF 25	2									

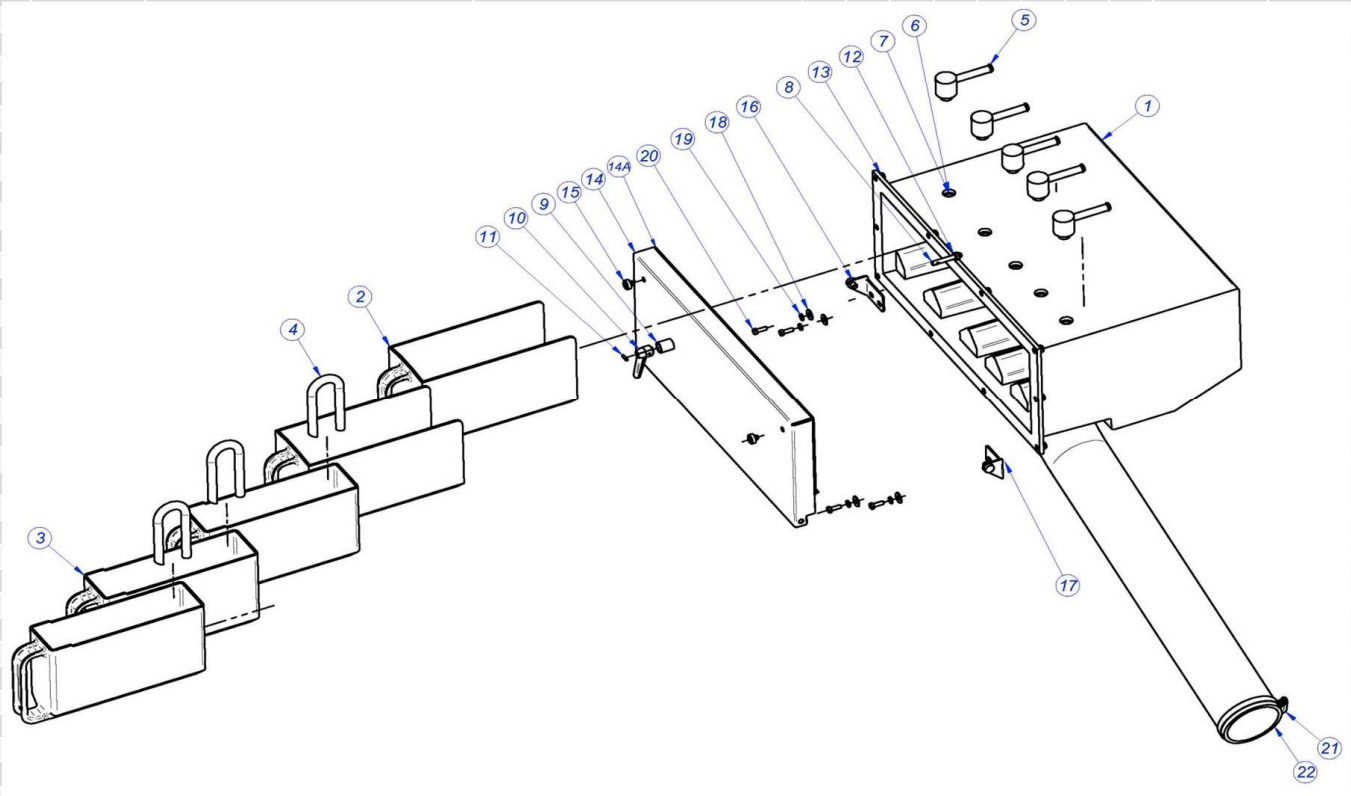

	CUADRO ELECTRICO / ELECTRICAL BOARD	LÁMINA / DRAWING		FAGOR

ITEM	REFERENCIA REFERENCE	DENOMINACIÓN	DENOMINATION	LA-120 TP							RECOMMENDED	ELIMINADO ELIMINATED	INTRODUCIDO INTRODUCED
1	12001047	PUERTA CUADRO 120 V2	DOOR ELECTRIC 120 V2	1									
2	12116834	SOPORTE MAIN BOARD	MAIN BOARD SUPPORT	1									
3	12119403	TARJETA PRINCIPAL TP (FULL)	MAIN BOARD TP (FULL)	1							X		
4	12116823	TRANSFORMADOR 1N 50W 240V/12V	1N 50W 240V/12V TRANSFORMER	1							X		
5	12023477	SECCIONADOR 63A 4VIA 2POS UL	SECTION SWITCH 63A 4VIA 2POS UL	1							X		
6	12024075	CON.3RT1024-1AN20 230V 50H	CON.3RT1024-1AN20 230V 50H	1							X		
7	12024743	BORNE TIER 10 WPE-10103.O	TERMINAL TIER 10 WPE-10103.O	1									
9	12025180	REGLETA BORNAJE 2 PISOS	TERMINAL STRIP 2 PISOS	14									
10	12025158	BORNAS PORTA FUSIBLES	FUSE HOLDER TERMINALS	2									
11	12128263	SENSOR DE PRESION 100MBAR	100MBAR PRESSURE SENSOR	1									
12	12024660	PASA CABLES	CABLE PROTECTOR	20									
13	12023862	VENTILADOR 230V.50-60HZ	FAN 230V.50-60HZ	2							X		
14	12025058	BISAGRA AUTOSERVICIO	SELF-SERVICE HINGE	3									
15	12024998	CERRADURA 0185	LOCK 0185	3									
16	12023385	FILTRO REGULADOR DE AIRE	AIR FILTER REGULATOR	1							X		
S/Nº	12009811	REDUCCION RC1/4-3/8	REDUCTION RC1/4-3/8	2									
17	12120814	TARJETA AUXILIAR TP (KITS)	AUXILIAR BOARD TP (KITS)	2							X		
18	12024645	RESISTENCIA TANQUE	TANK RESISTOR	1									
19	12140147	REP. VARIADOR DELTA 18,5KW 400V	REP. INVERTER DELTA 18,5KW 400V	1							X		
20	12023376	EV. SERIE 192 3/2	EV. SERIE 192 3/2	5							X		
21	12023482	LOTE EXTREMOS 6MM 3530071	END BLOCK 6MM 3530071	1									
22	12024969	BASE ACOPLABLE TUBO 4mm	BASE ACOPLABLE TUBO 4mm	5									
23	12000881	AUTOTR III 220/380V 15KVA	AUTOTR III 220/380V 15KVA	1							X	SOLO 230V ONLY	

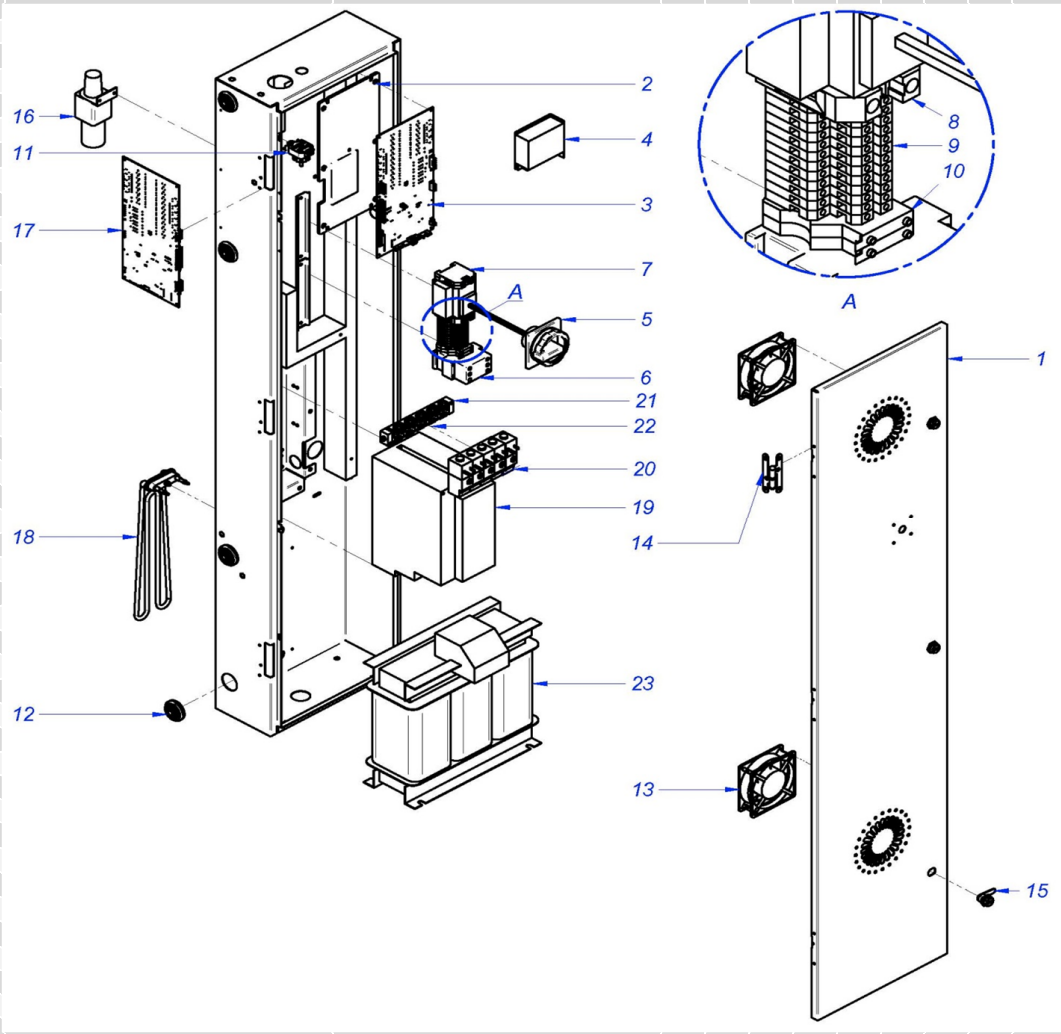

	KIT BASCULACION / TILTING KIT	LÁMINA / DRAWING		FAGOR

ITEM	REFERENCIA REFERENCE	DENOMINACIÓN	DENOMINATION	LA-120 TP							RECOMMENDED	ELIMINADO ELIMINATED	INTRODUCIDO INTRODUCED
	19005892	KIT BASCULACION	TILTING KIT										
1	12023447	TUBO AMARRE ACTUADOR 120	SWITCH FASTENING PIPE 120	2									
2	12039054	PLACA COJIN 120 SUB	PAD PLATE 120 SUB	2									
3	12021759	LISTON MUEBLE LAT.120	SIDE UNIT STRIP 120	4									
4	12021539	FROT. LATERAL MUEBLE 120	SIDE UNIT FRONT.	2									
5	12008826	PITON SOPORTE	SPIKE SUPPORT	2									
6	12001350	SOP. TRAVESAÑOS BASCULACION	SUPPORT TILTING CROSSBARS	4									
7	12023217	BASE ARMAZON 120	FRAME BASE 120	4									
8	12046931	LATERAL PLANTILLA BASCULACION 12(	TILTING TEMPLATE SIDE 120	2									
9	12025088	CASQUILLO SELFOIL ARMAZON120	FRAME SELFOIL BUSHING 120	4									
10	12023305	AMORTIGUADOR 2 ONDAS	2 WAVE DAMPER	2									
11	12007483	SOP. MICRO BASCULACION 120	TILTING MICRO SUPPORT 120	2									
12	12024834	FINAL DE CARRERA	LIMIT SWITCH	2									
13	12024238	RESOR.TENSOR MOTOR VF-6A000B1	MOTOR TENSOR SPRING VF-6A000B1	2									
14	12021540	PROTECTOR FRONTAL 120	FRONT PROTECTOR 120	1									
	12010064	REMACHE EXAGONAL INOX M8	HEXAGONAL RIVET INOX M8	29									
15	12046937	FRONTAL PLANTILLA BASCULACION 12(	TILTING TEMPLATE FRONT 120	2									

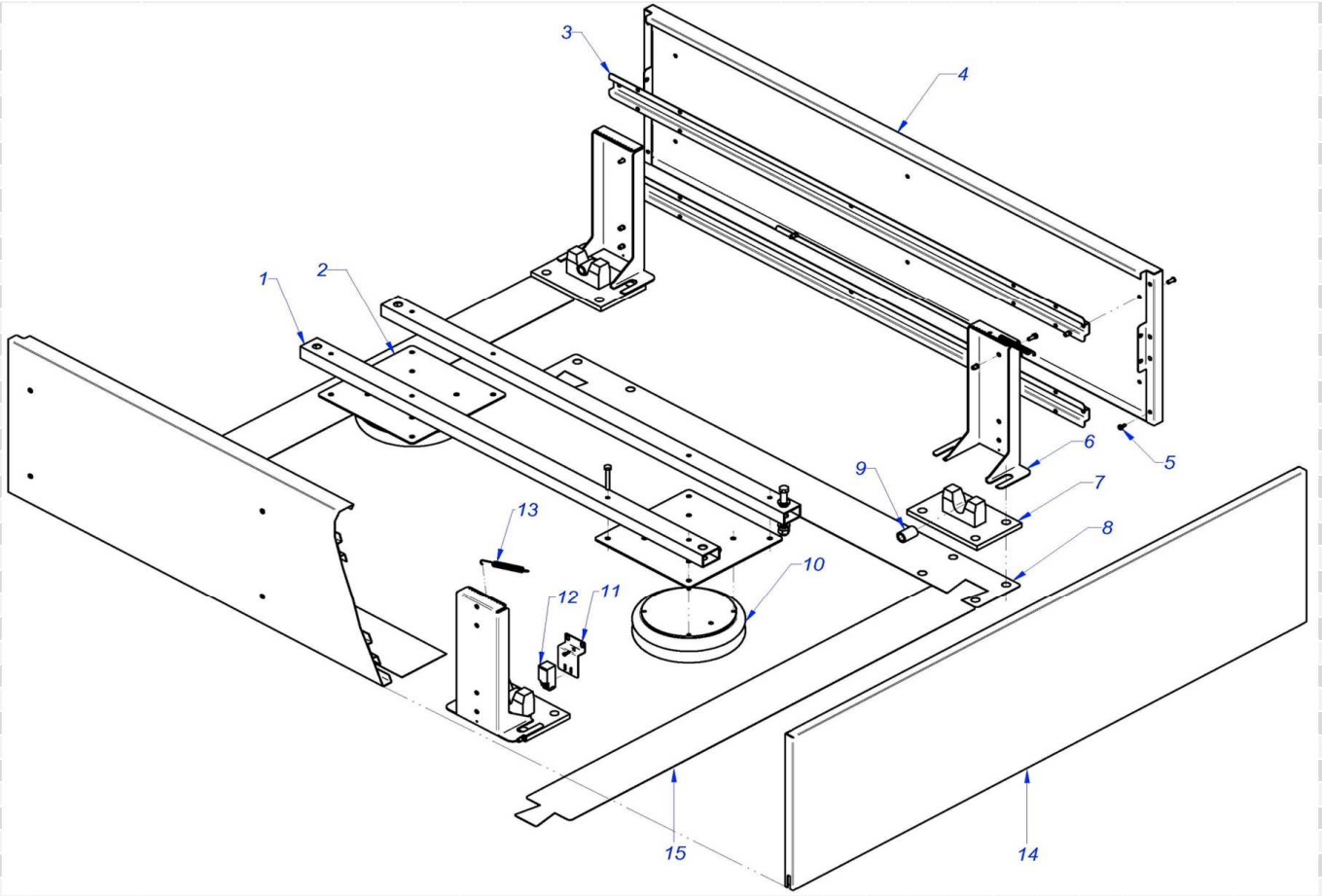

	ELECTRICO KIT BASCULACION / ELECTRIC TILTING KIT	LÁMINA / DRAWING		FAGOR

ITEM	REFERENCIA REFERENCE	DENOMINACIÓN	DENOMINATION	LA-120 TP								CONJUNTO FUNCIONAL / FUNCTIONAL PART
1	12024969	BASE ACOPLABLE TUBO 4mm	PIPE CONNECTABLE BASE 4 mm	2								
2	12023376	ELECTROVALVULA 230V AC 50Hz 1vía A	SOLENOID VALVE 230V AC 50Hz 1way Ai	2								
3	12009778	RACOR RAPIDO 1/4 - 6	RAPID CONNECTION 1/4 - 6	2								
4	12009776	RACOR RAPIDO 1/4 - 4	RAPID CONNECTION 1/4 - 4	2								
5	12009749	RACOR T HEMBRA 1/4	FEMALE T CONNECTION 1/4	2								
6	12009835	UNION MM 1/4	JOINT MM 1/4	3								
7	12007901	PRESOSTATO 400-4.000,00bar Simple	PRESSURE SWITCH 400-4000 bar Simple	2								
8	12024012	CONTACTOR 230V AC 50/60Hz 16A 4via	CONTACTOR 230V AC 50/60Hz 16A 4-wa	3								
9	12009702	EJE TOPE PUERTA BASCULACION	TILTING DOOR BUFFER SHAFT	1								
10	12008955	POMO M6 (ELESA-REF. 23901)	KNOB M6 (ELESA-REF. 23901)	1								
11	12003365	BOTONERA COMPLETA	COMPLETE BUTTON CONTROL PANEL	1								
12	12009652	SOPORTE IMAN BASCULACION	TILTING MAGNET SUPPORT	1								
13	12007740	IMAN MANDO BASCULACION	TILT CONTROL MAGNET	1								
14	12009783	TAPON PLASTICO HEMBRA M30X2	FEMALE PLASTIC PLUG M30X2	1								
S/Nº	11000163	TUBO NEUM. 4X2.5 (P685023)	PNEUM. PIPE 4X2.5 (P685023)	1								
S/Nº	11000112	TUBO NEUM. 6X4 (P685021)	PNEUM. PIPE 6X4 (P685021)	5								
15	12009851	PRENSAESTOPA PG 29 D38	PACKING GLAND PG 29 D38	2								
	12009647	CABLEADO BASCULACION-L40,60,120	TILT WIRING -L40,60,120	1								
	12007631	MANUAL INSTALACION TILTING SYS	MANUAL INSTALLATION TILTING SYS	1								

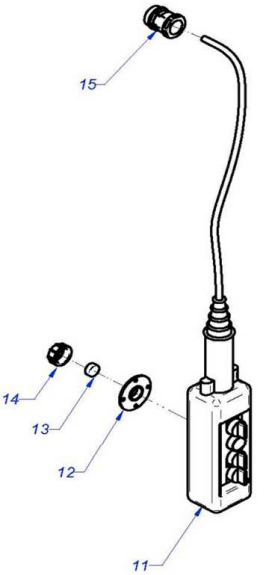

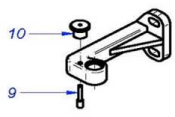

DETALLE BISAGRA / HINGE DETAIL

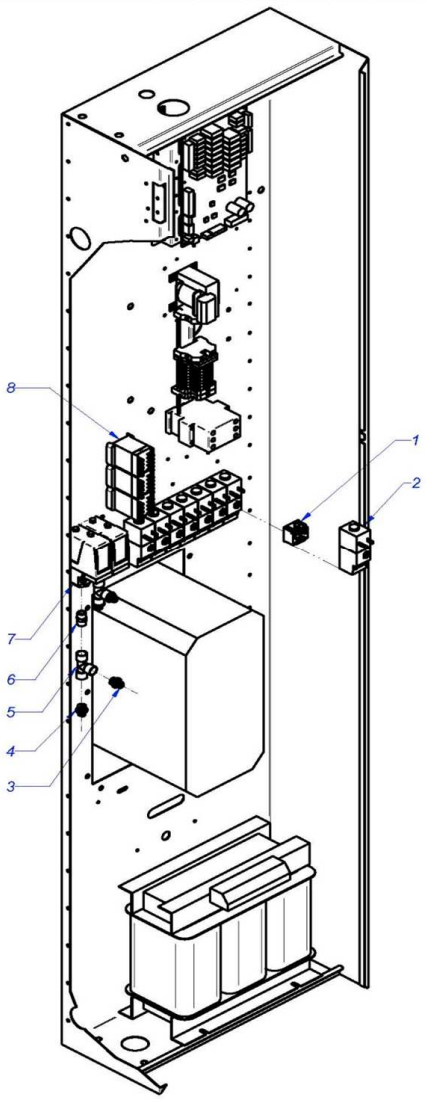

	VARIOS / VARIOUS		LÁMINA / DRAWING		FAGOR

ITEM	REFERENCIA REFERENCE	DENOMINACIÓN	DENOMINATION	LA-120 TP							RECOMMENDED	ELIMINADO ELIMINATED	INTRODUCIDO INTRODUCED
	12124211	INSTALACIÓN ELECT. L-120	ELEC. INSTALLATION L-120	1									
	12025207	CABLE MICRO DESEQUILIBRIO	UNBALANCE MICRO WIRE	1									
	12023230	CABLEADO MOTOR 120	ENGINE WIRING 120	1									
	12024960	CABLEADO PROGR. TECLADO 120	PROG. WIRING KEYBOARD 120	1									
	12095232	CABLE. PTC+PUENTE RECTIFIC.	PTC + WIRING BRIDGE-RECTIF.	1							X		
	12025199	CABLE REGLETA CONTACTOR	POWER STRIP - CONTACTOR WIRE	1									

	RECOMENDADOS / RECOMMENDED	LÁMINA / DRAWING		FAGOR

ITEM	REFERENCIA REFERENCE	DENOMINACIÓN	DENOMINATION	LA-120 TP								NOTAS / NOTES
15	12120238	SOPORTE SETA EMERGENCIA	EMERGENCY STOP SUPPORT	1								MUEBLE / CABINET
16	12120237	PULSAD. 250V AC 16A 1VIA 2POS UL	250V AC 16A 1WAY 2POS UL SWITCH	1								MUEBLE / CABINET
17	12120235	SETA DE EMERGENCIA	EMERGENCY STOP BUTTON	1								MUEBLE / CABINET
18	12115334	ADHESIVO COLUMNAS TP FAGOR	COLUMN ADHESIVE TP FAGOR	1								MUEBLE / CABINET
20	12119488	DISPLAY TP	DISPLAY TP	1								MUEBLE / CABINET
21	12120404	TARJETA DISPLAY TFT	TFT DISPLAY CARD	1								MUEBLE / CABINET
25	12023335	VALVULA 4" IZQUIERDA	4" LEFT VALVE	1								MUEBLE / CABINET
4	12023211	ELECTROIMAN PUERTA	DOOR ELECTROMAGNET	1								PUERTA / DOOR
18	12138167	BLOQUEO CIERRE 40,60,120	CLOSURE LOCK 40,60,120	1								PUERTA / DOOR
20	12025218	INTERRUPTOR PUERTA PLANO	FLAT DOOR SWITCH	2								PUERTA / DOOR
13	12049230	AMORTIGUADOR LF-120	SHOCK ABSORB. LF-120	8								ARMAZON / FRAME
14	12025076	AMORTIGUADOR 250N SUSPA	SHOCK ABSORB. 250N SUSPA	8								ARMAZON / FRAME
12	12024891	CORREA SPB 120	BELT SPB 3000	4								CUNA / CRADLE
15	12023231	MOTOR 15KW	MOTOR 15KW	1								CUNA / CRADLE
27	12101476	VENTIL. + SOP. MOTOR 120	FAN + FAN SUPP. 120 MOTOR	1								CUNA / CRADLE
12A	12092890	KIT SOPORTE + RODAM 120	KIT SUPPORT + BEARINGS 120	1								CUBA / TUB
34	11000420	JUNTA CUBA 18	TUB JOINT 18	3								CUBA / TUB
37	12096597	TERM_SEG_261B_110ºC_FAST_90	SAFETY THER. 261B_110ºC_FAST_90	1								CUBA / TUB
3	12119403	TARJETA PRINCIPAL TP (FULL)	MAIN BOARD TP (FULL)	1								ELECTRICO / ELECTRIC
4	12116823	TRANSFORMADOR 1N 50W 240V/12V	1N 50W 240V/12V TRANSFORMER	1								ELECTRICO / ELECTRIC
5	12023477	SECCIONADOR 63A 4VIA 2POS UL	SECTION SWITCH 63A 4VIA 2POS UL	1								ELECTRICO / ELECTRIC
6	12024075	CON.3RT1024-1AN20 230V 50H	CON.3RT1024-1AN20 230V 50H	1								ELECTRICO / ELECTRIC
13	12023862	VENTILADOR 230V.50-60HZ	FAN 230V.50-60HZ	2								ELECTRICO / ELECTRIC
16	12023385	FILTRO REGULADOR DE AIRE	AIR FILTER REGULATOR	1								ELECTRICO / ELECTRIC
17	12120814	TARJETA AUXILIAR TP (KITS)	AUXILIAR BOARD TP (KITS)	2								ELECTRICO / ELECTRIC
19	12140147	REP. VARIADOR DELTA 18,5KW 400V	REP. INVERTER DELTA 18,5KW 400V	1								ELECTRICO / ELECTRIC
20	12023376	EV. SERIE 192 3/2	EV. SERIE 192 3/2	5								ELECTRICO / ELECTRIC
23	12000881	AUTOTR III 220/380V 15KVA	AUTOTR III 220/380V 15KVA	1								ELECTRICO / ELECTRIC
	12095232	CABLE. PTC+PUENTE RECTIFIC.	PTC + WIRING BRIDGE-RECTIF.	1								VARIOS / VARIOUS

LAV 120, 60, 40 kg BASCULANTE

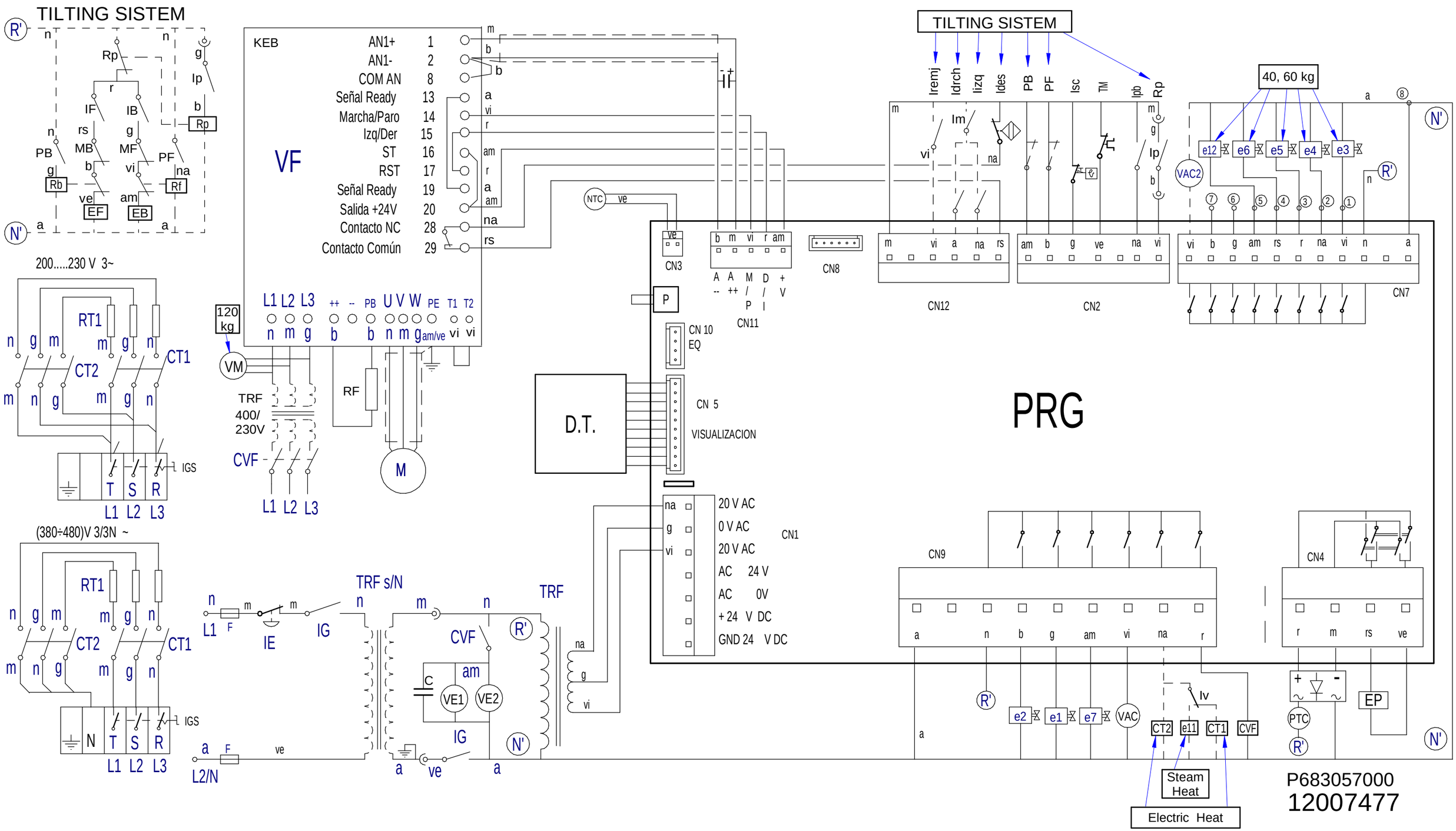

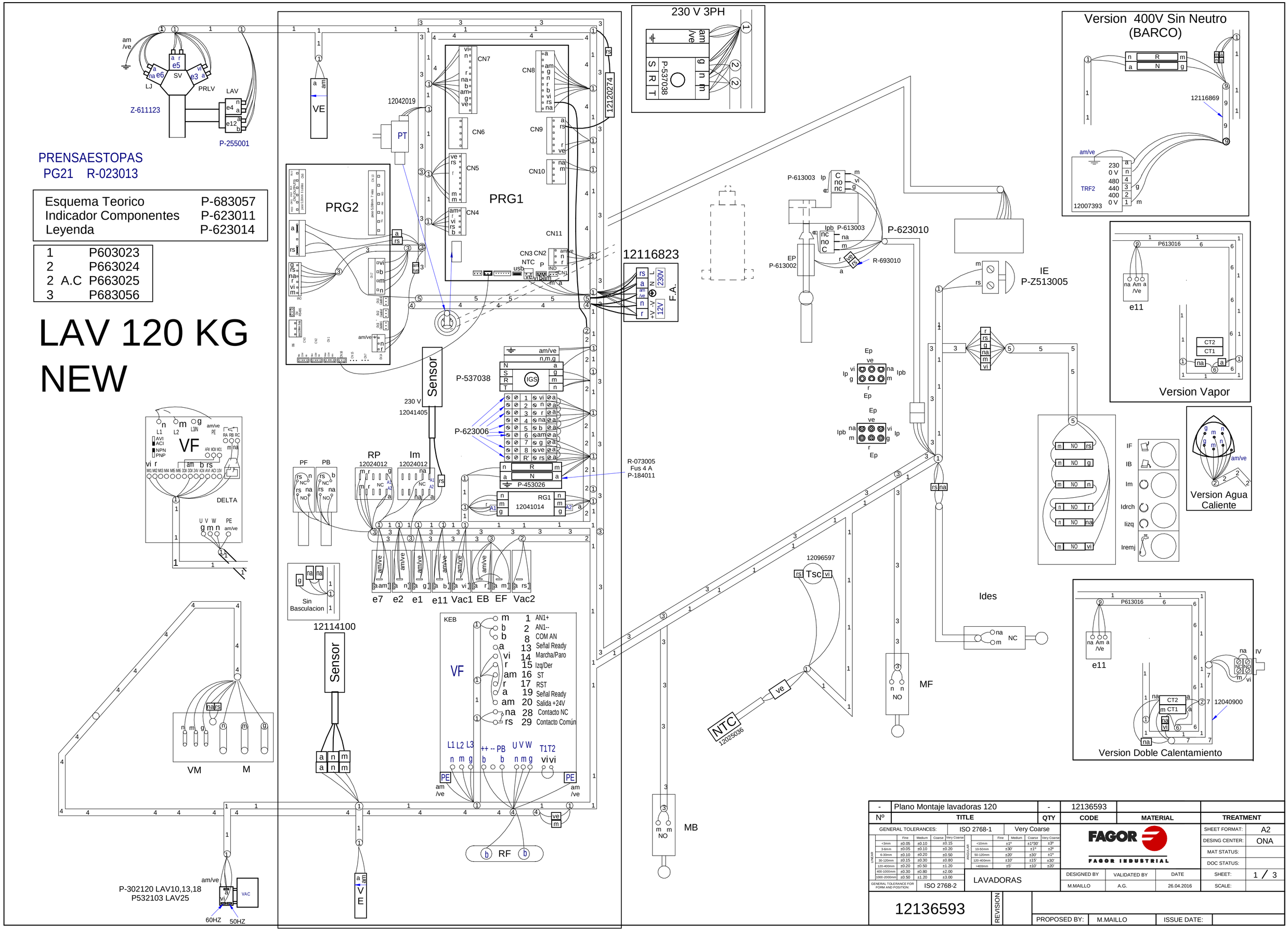

-	Plano Montaje lavadoras 120	-	12136593		
Nº	TITLE	QTY	CODE	MATERIAL	TREATMENT

GENERAL TOLERANCES: ISO 2768-1 Very Coarse

	Fine	Medium	Coarse	Very Coarse
LINEAR <3mm	±0.05	±0.10	±0.15	
3-6mm	±0.05	±0.10	±0.20	
6-30mm	±0.10	±0.20	±0.50	
30-120mm	±0.15	±0.30	±0.80	
120-400mm	±0.20	±0.50	±1.20	
400-1000mm	±0.30	±0.80	±2.00	
1000-2000mm	±0.50	±1.20	±3.00	

	Fine	Medium	Coarse	Very Coarse
ANGULAR <10mm	±1°	±1°30'	±3°	
10-50mm	±30'	±1°	±2°	
50-120mm	±20'	±30'	±1°	
120-400mm	±10'	±15'	±30'	
>400mm	±5'	±10'	±20'	

GENERAL TOLERANCE FOR FORM AND POSITION: ISO 2768-2

LAVADORAS

FAGOR
FAGOR INDUSTRIAL

DESIGNED BY	VALIDATED BY	DATE
M.MAILLO	A.G.	26.04.2016

SHEET FORMAT: A2
DESING CENTER: ONA
MAT STATUS:
DOC STATUS:
SHEET: 1 / 3
SCALE:

12136593

REVISION

PROPOSED BY: M.MAILLO ISSUE DATE:

Simb / LENG		ESPAÑOL	ENGLISH	FRANÇAIS	DEUTSCH	ITALIANO
CT1, CT2	=	Contactor Calentamiento	Heating Contactor	Contacteur Chauffe	Heizschütz	Contatore Riscaldamento
CVF	=	Contactor Variador	Converter Contactor	Contacteur Convertisseur	Schütz Frequenzumwandler	Contactore Convertitore
5	=	Dosificador Neutralizante.	Neutralizer feeder	Doseur Neutralisant	Dosiervorrichtung Neutralspülmittel	Dosatore Neutralizzante
6	=	Dosificador jabon liquido.	Liquid soap feeder	Doseur lessive liquide	Dosiervorrichtung Flüssigseife	Dosatore sapone liquido
7	=	Dosificador aditivos.	Additive feeder	Doseur additifs	Dosiervorrichtung Zusatzmittel	Dosatore additivi
D.T.	=	Display/Teclado	Display/Keyboard	Écran/Clavier	Display/Tastatur	Display/Tastiera
e1	=	Electro válvula agua Fria.	Cold water electrically operated valve	Électrovanne eau Froide	Elektroventil Kaltwasser	Elettrovalvola acqua Fredda
e2	=	Electro válvula agua Caliente	Hot water electrically operated valve	Électrovanne eau Chaude	Elektroventil Warmwasser	Elettrovalvola acqua Calda
e3	=	Electro válvula Prelavado.	Pre-wash electrically operated valve	Électrovanne Prélavage	Elektroventil Vorwaschen	Elettrovalvola Prelavaggio
e4, e41	=	Electro válvula Lavado.	Wash electrically operated valve	Électrovanne Lavage	Elektroventil Hauptwaschgang	Elettrovalvola Lavaggio
e5	=	Electro válvula Lejía.	Bleach electrically operated valve.	Électrovanne Eau de Javel	Elektroventil Bleiche	Elettrovalvola Candeggina
e6	=	Electro válvula Suavizante.	Fabric softener electrically operated valve	Électrovanne Assouplissant	Elektroventil Weichspüler	Elettrovalvola Ammorbidente
e7	=	Electro válvula agua Descalcificada	Delimed water electrically operated valve	Électrovanne eau Adoucie	Elektroventil entkalktes Wasser	Elettrovalvola acqua Decalcificata
e11	=	Electro válvula Vapor.	Steam electrically operated valve	Électrovanne Vapeur	Elektroventil Dampf	Equilibrado Vapore
EB	=	Electro válvula de aire Basculacion Trasera	Air Valve of the Back Tilting	Soupape à air de l'inclinaison arrière	Luftventil des rückseitigen Kippens	Valvola per aria di inclinazione posteriore
EF	=	Electro válvula de aire Basculacion Frontal	Air Valve of the Front Tilting	Soupape à air de l'inclinaison avant	Luftventil des vorderen Kippens	Valvola per aria di inclinazione anteriore
EP	=	Electroimán de Puerta.	Door electric magnet	Électro-aimant de Porte	Elektromagnet Gerätetür	Elettromagnete Porta
FI	=	Filtro de Interferencias.	Interference filter	Filtre Anti-parasites	Störungsfilter	Filtro Interferenze
F	=	Fusible.	Fuse	Fusible	Sicherung	Fusibile
IE	=	Pulsador Parada de emergencia.	Emergency stop push button	Bouton-poussoir Arrêt d'urgence	Not-Aus-Taster	Pulsante Arresto di emergenza
IG	=	Interruptor general.	General switch	Interrupteur général	Hauptschalter	Interruttore generale
IGS	=	Interruptor General de seguridad.	General safety switch	interrupteur Général de sécurité	Sicherheitshauptschalter	Interruttore Generale di sicurezza
IB	=	Interruptor Basculacion Trasero del Mando.	Back Tilting Switch of Control	Commutateur de inclinaison arrière de commande	Rückseitiger kippenschalter der Steuerung	Interruttore di inclinazione posteriore di controllo
Idrch	=	Interruptor Rotacion a Derechas del Mando	Switch of Spins to the Right of Control	Commutateur des rotations à la droite de la comm	Schalter von Drehbeschleunigungen auf der rechten Seite der Steuerung	Interruttore delle rotazioni alla destra di controllo
Ides	=	Interruptor de desequilibrio.	Unbalance switch	Interrupteur de balourd	Ungleichgewichtsschalter	Interruttore di squilibrio
IF	=	Interruptor Basculacion Frontal Mando.	Front Tilting Switch of Control	Front Tilting Switch of Contrôle	Vorderer kippenschalter der Steuerung	Interruttore di inclinazione anteriore di controllo
Iizq	=	Interruptor Rotacion a Izquierdas Mando	Switch of Left Spin of Control	Commutateur de rotation gauche de commande	Schalter der linken Drehbeschleunigung der Steuerung	Interruttore della rotazione di sinistra di controllo
Im	=	Interruptor Movimiento / parada / Mando	Stopped Motion Switch	Détecteur D'arrêt		
IMo	=	Interruptor Monedero.	Coin slote switch	Interrupteur Monnayeur	Münzschalter	Interruttore Portamonete
Ip	=	Interruptor puerta Cerrada.	Closed door switch	Interrupteur porte Fermée	Schalter Tür geschlossen	Interruttore porta Chiusa
Ipb	=	Interruptor puerta bloqueada.	Door lock switch	Interrupteur porte verrouillée	Schalter Tür verriegelt	Interruttore porta bloccata
Iremj	=	Interruptor de Remojo del Mando	Soaking Switch of Control	Commutateur de trempage de commande	Tränkender Schalter der Steuerung	Interruttore d'inzuppamento di controllo
Isc	=	Interruptor seguridad Temperatura	Hi-limit Thermostat	Thermostat Limiteur	Grenzthermostat	Termostato Limitatore
Iv	=	Interruptor Vapor	Steam Switch	Commutateur de vapeur	Dampf-Schalter	Interruttore del vapore
M	=	Motor.	Motor	Moteur	Motor	Motore
MB	=	Interruptor seguridad Basculacion Trasero.	Back Tilting Hi-limit Switch			
MF	=	Interruptor seguridad Basculacion Frontal.	Front Tilting Hi-limit Switch			
Mo	=	Monedero.	Coin slot	Monnayeur	Münzvorrichtung	Portamonete
NTC	=	Sensor temperatura.	Temperature sensor	Capteur température	Temperatursensor	Sensore temperatura
PB	=	Presostato Basculacion Trasero	Back Tilting Air Presure Low-Limit			
PF	=	Presostato Basculacion Frontal	Front Tilting Air Presure Low-Limit			
P, P2		Presostato Nivel de agua	Water Level Switch			
PRG	=	Circuito Programador.	Programmer Circuit	Circuit Programmateur	Kreislauf Programmiervorrichtung	Circuito Programmatore
PTC	=	PTC	PTC	PTC	PTC	PTC
Rb	=	Rele Basculacion Trasero	Back Tilting Relay			
Rf	=	Rele Basculacion Frontal	Front Tilting Relay			
Rm	=	Rele movimiento / Parada	Stopped Motion Relay	Relais Détecteur D'arrêt		
Rp	=	Rele Puerta	Closed door Relay	Relais porte Fermée		Rele porta Chiusa
Rpb	=	Rele Puerta Bloqueada	Door lock Relay	Relais porte verrouillée		Rele porta bloccata
RT	=	Resistencia Calentamiento.	Heating Resistors	Résistance Chauffe	Widerstand Aufheizung	Resistenza Riscaldamento
TL	=	Limitador Temperatura	Hi-limit Thermostat	Thermostat Limiteur	Grenzthermostat	Termostato Limitatore
Tm	=	Térmico de Motor.	Motor hot-wire	Thermique du Moteur	Motorwärmeschalter	Termico del Motore
Trf	=	Transformador	Transformer	Transformateur	Transformator	Trasformatore
Trf s/N	=	Transformador Versión sin Neutro.	Transformer Version without Neutral	Transformateur Version sans Neutre	Transformator Modell ohne Neutralstellung	Trasformatore Versione senza Neutro
VAC, VAC2	=	Válvula Vaciado	Emptying valve	Vanne Vidange	Ablassventil	Valvola Scarico
VE, VE1, VE2	=	Ventilador.	Fan	Ventilateur	Ventilator	Ventola
VF	=	Convertidor de Frecuencia.	Frequency converter	Convertisseur de Fréquence	Frequenzumwandler	Convertitore di Frequenza
VM	=	Ventilador Motor.	Fan motor	Ventilateur Moteur	Ventilator Motor	Ventola Motore
1...8	=	Puntos conexión dosificadores.	Feeder connection points	Points raccordement doseurs	Anschlussstellen Dosiervorrichtungen	Punti connessione dosatori
9 - 10	=	Entrada de la central de pago 24V =	Central Entrance of payment			
11 - 12	=	Salida hacia la central de pago	Exit towards Central of Payment			
COLOR	=	COLORES	COLOUR	COULEURS	FARBEN	COLORE
a	=	Azul	Blue	Bleu	Blau	Blu
am	=	Amarillo	Yellow	Jaune	Gelb	Giallo
am/ve	=	Amarillo/verde	Yellow / green	Jaune / vert	Gelb/grün	Giallo/verde
b	=	Blanco	White	Blanc	Weiß	Bianco
g	=	Gris	Grey	Gris	Grau	Grigio
m	=	Marrón	Brown	Marron	Braun	Marrone
n	=	Negro	Black	Noir	Schwarz	Nero
na	=	Naranja	Orange	Orange	Orange	Arancio
r	=	Rojo	Red	Rouge	Rot	Rosso
rs	=	Rosa	Pink	Rose	Rosa	Roseo
ve	=	Verde	Green	Vert	Grün	Verde
vi	=	Violeta	Purple	Violet	Violett	Viola
						P623014000