FAGOR

SPARE PARTS CATALOGUE
ERSATZTEILKATALOG
CATALOGUE PIECES DETACHEES
CATALOGO PARTI RICAMBIO
CATALOGO DE PIEZAS DE RECAMBIO
CATALOGO PEÇAS DE REPOSIÇÃO

LP-60ECO

22-02-2019

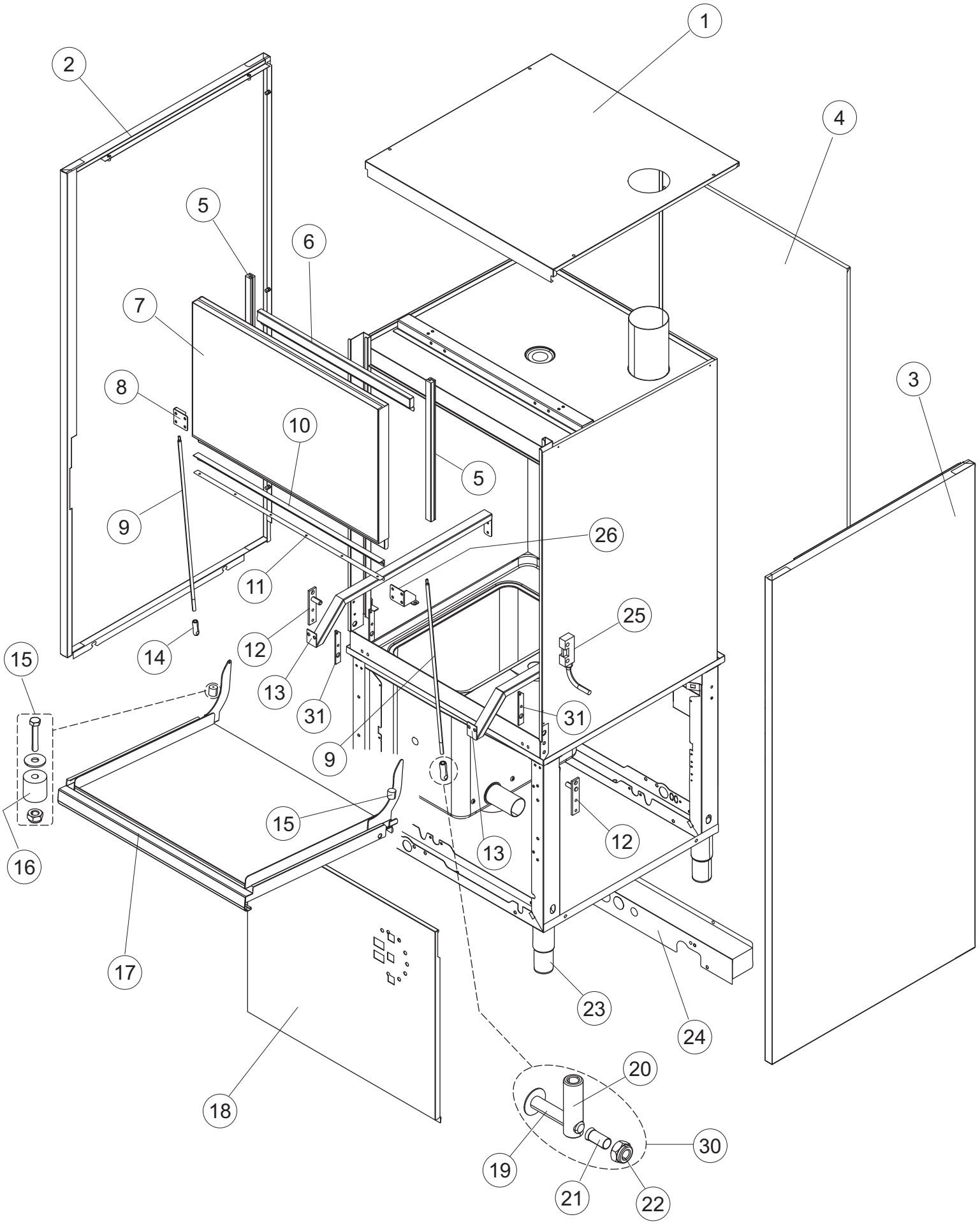
1
2
3
4
5
6
7
8
9
10
11
12
13
14
15
16
17
18
19
20
21
22
23
24
25
26
31
31

Listino componenti per pagina 1

1	67138	PANNELLO SUPERIORE LP4/5 PANNEAU SEITENPANEEL PANEL PANEL	
2	67110	PANNELLO LATERALE SINISTRO LP1 2018 PANNEAU LATERAL GAUCHE LINKEN SEITENWAND LEFT SIDE PANEL PANEL LATERAL IZQUIERDO	
3	67114	PANNELLO LATERALE DESTRO LP1 2018 PANNEAU LATERAL DROITE RECHTE SEITENWAND RIGHT SIDE PANEL PANEL LATERAL DERECHO	
4	67122	PANNELLO POSTERIORE PANNEAU ARRIERE PLATTE, HINTEN BACK PANEL PANEL TRASERO	
5	41038	GUIDA SCORREVOLE PER SPORTELLO SUPERIORE PER LAVA GUIDE GLISSANTE PORTE SUPERIEURE POUR LA VE-CASSER SCHIEBER, OB.TÜR U61/61H DOOR SLIDING GUIDE - UPPER FOR POT AND P AN WASHER GUIA CORRED. PUERTA SOP. U61/61H	
6	42042	BATTUTA SPORTELLO SUPERIORE ARRETR PORTE SUPERIEURE TÜRANSCHLAG, OBEN U70 TOP DOOR-STOP BAR TOPE PUERTA SUPERIOR	
7	67080	PORTA SUPERIORE PORTE SUPERIEURE TUER - OBEN - KOMPLETT - FUER KOCHTOEPFE SPUELER UPPER DOOR PUERTA SUPERIOR	
8	4108801	STAFFA SINISTRA PORTA console de support LINK-HALTER FUER ANKUPPELN OBEREN TUERSTANGE FUEF support bracket ménsula de soporte	
9	4109301	TIRANTE SPORTELLO TIRANT PORTE POUR LAVE-CASSEROLES ZUGSTAB, TÜR 610 DOOR TIE FOR POT AND PAN WASHERS TIRANTE PUERTA 610	
10	41583 *Recommended spare parts*	GUARNIZIONE PORTA JOINT POUR PORTE TUERDICHTUNG DOOR GASKET JUNTA PUERTA	
11	41582	STAFFA GUARNIZIONE PORTA SUPPORT JOINT PORTE SUPERIEURE HALTERUNG FUER TUERPACKUNG - OBEN FUER K DOOR PACKING SUPPORT - UPPER SOPORTE JUNTA PUERTA SOP. U61. .	
12	4114501	PIASTRA PORTA PLAQUE PETITE POUR PIVOT PORTE PLATTE, TÜRANGEL U61.. SMALL PLATE FOR DOOR PIN PLANCHITA PERNO PUERTA U61. .	
13	41539	GUIDA CESTO GUIDE PANIER KORBFUEHRUNG RACK SLIDE GUIA CESTA	
14	K41095	GRUPPO BOCCOLA TIRANTE PORTA BOUCLE SUPERIEURE TIRANT PORTE BUCHSE, TÜRZUGSTAB UPPER BUSH FOR DOOR TIE CASQUILLO TIRANTE PUERTA	
15	K80105LP	GRUPPO TAMPONE BATTUTA PORTA SHOCK-ABSORBER FOR CAPOT PUFFER FÜR DURCHSCHUBSPÜLAUTOM. PARE-CHOCS HOOD TYPE GUARDAGOLPES CAPOT	

16	80105 *Recommended spare parts*	TAMPONE FERMO PORTA / CAPPA arrêt de porte / CAPOT Türanschlag HOOD / DOOR STOP parada de la puerta	
17	41570	PORTA INFERIORE PORTE INFERIEURE UNTERE TUR LOWER DOOR PUERTA INFERIOR	
18	67130	PANNELLO ANTERIORE D LP1 2018 PANNEAU AVANT VORDERPANEEL FRONT PANEL PANEL FRONTAL	
19	486078 *Recommended spare parts*	VITE IN ACCIAIO INOSSIDABILE SPEC. 6MA VIS EN ACIER INOXYDABLE 6MAX30 T.1/2 TC SCHRAUBE TC-CE M6X40 INOX STAINLESS STEEL SCREW 6MAX30 T.1/2 TC TORNILLO TC-CE M6X40 INOX	
20	41095	BOCCOLA SUPERIORE TIRANTE SPORTELLO PER LAVAPENTC BOUCLE SUPERIEURE TIRANT PORTE POUR LAVE -CASSEROI BUCHSE, TÜRZUGSTAB 610/610H UPPER BUSH FOR DOOR TIE FOR POT AND PAN WASHERS CASQUILLO TIRANTE PUERTA 610/610H	
21	DZT7981	TRONCH TUBO INOX D 10X1,5 L=16MM TRONC TUYAU INOX D 10X1,5 L=16MM STUTZEN, INOX D 10X1,5 L=16MM STUB PIPE, INOX D 10X1,5 L=16MM VER CODIGO 926265	
22	CDI206AU	DADO AUTOBLOCCANTE ECROU AUTOBLOCK SCHRAUBENM./SELBSTSICH. A2 UNI7474 M6 INOX (UNTEN) NUT - SELF-LOCK TUERCA/AUTOBLOCK	
23	927006	PIEDE VERRIN VERSTELLFUSS FÜR KORBTR. FOOT PATA REGULABLE	
24	67622	PANNELLO RETRO INFERIORE LP4/5 PANNEAU ARRIERE PLATTE, HINTEN BACK PANEL PANEL TRASERO	
25	80871 *Recommended spare parts*	MICRO MAGNETICO CONTACTE MAGNETIQUE TUERKONTAKTSCHALTER MAGNETIC DOOR SWITCH CONTACTO MAGNETICO	
26	4108701	STAFFA DESTRA PORTA console de support CHAUDIÈRE RECHT-HATER FUER ANKUPPELN DER OBEREN TUER-STANG DOOR BRACKET DERECHA TOPE PUERTA	
30	K41095	GRUPPO BOCCOLA TIRANTE PORTA BOUCLE SUPERIEURE TIRANT PORTE BUCHSE, TÜRZUGSTAB UPPER BUSH FOR DOOR TIE CASQUILLO TIRANTE PUERTA	
31	4113501	SPESSORE PORTA EPAISSEUR LATERAL PORTE DX/SX SEITL. EINLEGERING FÜR TÜR DOOR SIDE THICKNESS - DX/SX GROSOR LAT. PUERTA	

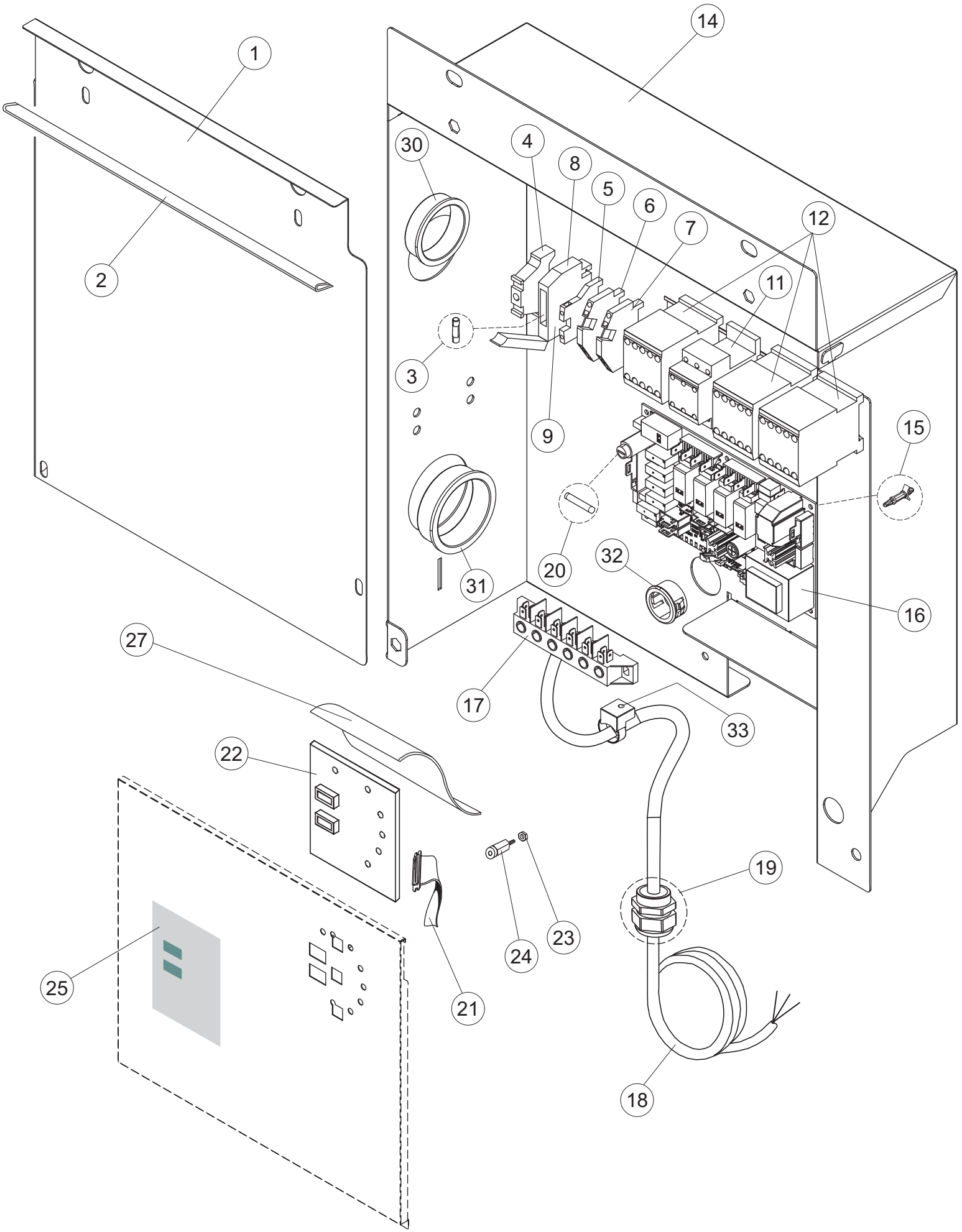
1
2
3
4
5
6
7
8
9
11
12
14
15
16
17
18
19
20
21
22
23
24
25
27
30
31
32
33

Listino componenti per pagina 2

1	67069	COPERCHIO QUADRO ELETTRICO COUVERCLE VERSCHLUSSDECKEL COVER TAPA	
2	67061	PROFILO IN GOMMA PER PANN. ROTOLO 20MT	
3	228010 *Recommended spare parts*	FUSIBILE 5X20 T4A RITARDATO 250V FUSIBLE SICHERUNG 5X20 T4A FUSE FISIBLE	
4	75817	MORSETTO PER BARRA OMEGA CONNECTEUR ÉLECTRIQUE POUR U-FORME BARRE ELEKTRISCHER VERBINDER ZUM STABFÖRMIGEN ELECTRICAL CONNECTOR FOR U-SHAPED BAR CONECTOR ELÉCTRICO PARA VARILLA EN FORMA DE U	
5	927114	MORSETTIERA SIEMENS 35MM 8WA10111PM00 bornier pour le raccordement KLEMMENB. SIEMENS 35MM 8WA1-735(ERDUNG) TERMINAL BLOCK bloque de terminales	
6	80822	MORSETTO 2,5MM 24A (ART.280-641) GRIGIO BORNE KLEMME TERMINAL BORNE 2,5MM 24A (ART.280-641) GRIS	11x
7	80824	MORSETTO BORNE KLEMME TERMINAL BORNERO	
8	H.228047	PORTAFUSIBILE PORTE-FUSIBLE *SICHERUNGSTRAGER FUSE-HOLDER PORTA-FUSIBLE	
9	H.228048	TAPPO PORTAFUSIBILE BOUCHON * SICHERUNGSTRAGER-VERSCHLUSS PLUG TAPON	
11	73351 *Recommended spare parts*	CONTATTORE CONTACTEUR KONTAKT-GEBER 230-50/60HZ CONTACTOR CONTACTOR	
12	73350 *Recommended spare parts*	CONTATTORE CONTACTEUR KONTAKT-GEBER 230-50/60HZ CONTACTOR CONTACTOR	
14	67066	PANNELLO PORTACOMPONENTI LP1 2018 PANNEAU VERKLEIDUNG PANEL PANEL	
15	CWP2	PIEDINI SUPPORTO SCHEDA ELETTRONICA VERRIN STÜTZFÜSSE FÜR PLATINE (ART.DRA6A) FOOT PATA	
16	215041-9 *Recommended spare parts*	SCHEDA 215041+FIRMWARE34(FW_0_XXJ.Q014) CARTE ELECTRONIQUE 215041+FIRMWARE34 (FW_0_XXJ.Q01 KARTE ELEKTRONIK 215041+FIRMWARE34 (FW_0_XXJ.Q014) MAIN BOARD 215041+FIRMWARE34 (FW_0_XXJ.Q014) TARJETA electrónica 215041+FIRMWARE34 (FW_0_XXJ.Q014)	
17	220011	MORSETTIERA bornier pour le raccordement * KLEMMENBRETT, 5-POLIG + ERDUNG FV.122 TERMINAL BLOCK bloque de terminales	

18	69803	CAVO ALIMENTAZIONE 5X4MM (H07RN-F) CÂBLE ÉLECTRIQUE ELEKTRISCH KABEL POWER CABLE CABLE ELÉCTRICO	
19	75991	PRESSACAVO presse étoupe Kabelverschraubung CABLE GLAND pasacables	
20	228010 *Recommended spare parts*	FUSIBILE 5X20 T4A RITARDATO 250V FUSIBLE SICHERUNG 5X20 T4A FUSE FISIBLE	
21	80934 *Recommended spare parts*	CAVO FLAT CABLE FLAT FLACHKABEL FLAT CABLE CABLE FLAT	
22	80889 *Recommended spare parts*	TASTIERA COMANDI touche clavier commande TASTATURPLATINE CONTROL KEYBOARD TECLADO DE COMANDOS	
23	417119 *Recommended spare parts*	DADO ECROU SCHRAUBENMUTTER, M3 KUNST. WEISS NUT TUERCA	
24	419036 *Recommended spare parts*	DISTANZIALI SCHEDA ENTRETOISE X CARTE ELECTRONIQUE ABSTANDSSTÜCK, M3 INTERFACE BOARD DISTANCE KEEPERS DISTANCIADOR M3	
25	67829	INTERFACCIA ADESIVA DI CONTROLLO LP-60/60H/70/130 FAGC INTERFACE ADHÉSIVE CONTRÔLE LP-60/60H/70/130 FAGOR TASTATURFOLIEN LP-60/60H/70/130 FAGOR CONTROL ADHESIVE INTERFACE LP-60/60H/70/130 FAGOR INTERFAZ ADHESIVA DE CONTROL LP-60/60H/70/130 FAGOR	
27	69810	TENDINA COPERTURA TASTIERA PANN ANT. rideau VORHANG CURTAIN CORTINA COPERTURA TECLADO PAN. DELANT.	
30	70270	BOCCOLA DOUILLE BUSCH BUSH CASQUILLO	
31	69076	BOCCOLA IN PLASTICA (SB 1750-22 NERE) DOUILLE BUECHSE BUSH CASQUILLO DE PLASTICO (SB 1750-22 NEGROS	
32	70270	BOCCOLA DOUILLE BUSCH BUSH CASQUILLO	
33	80831	FASCETTA STRINGITUBO COLLIER DE SERRAGE SCHLAUCHSCHELLE HOSE CLAMP ABRAZADERA	

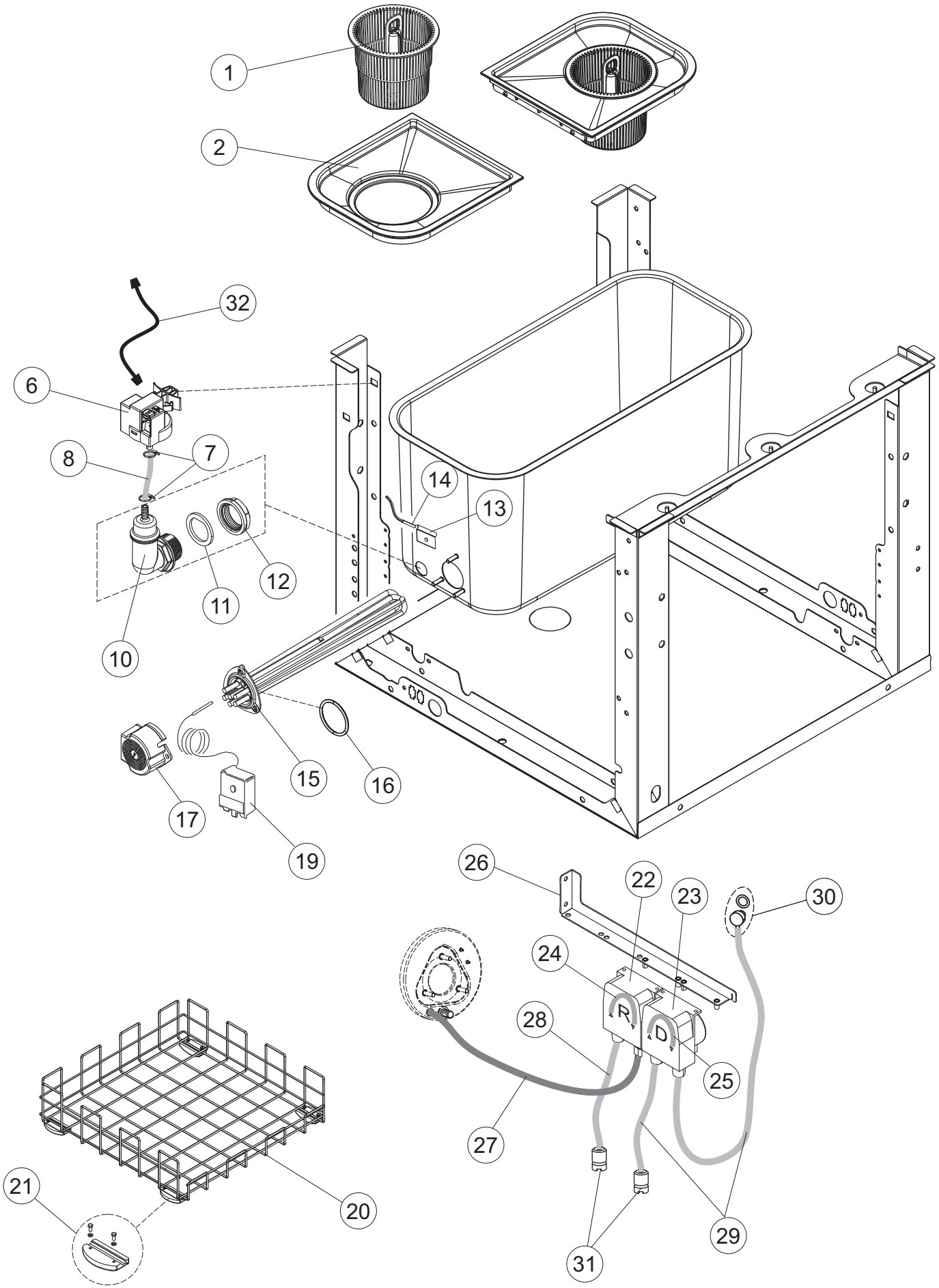
1
2
32
6
8
7
14
13
12
11
10
15
16
17
19
26
22
23
30
24
28
25
27
29
31
20
21
R
D

Listino componenti per pagina 3

1	70159	CESTELLO FILTRO VASCA PETIT CASIER POUR FILTRE TANK SIEN KORBEN TANK STRAINER BASKET CESTA FILTRO CUBETA	
2	77842	FILTRO VASCA PRELAVAGGIO TRAINO FILTRE FILTER STAINER FILTRO	
3	75661	FILTRO ASPIRAZIONE POMPA FILTRE ASPIRATION POMPE PUMPENANSAUGSIEB PUMP ASPIRATION FILTER FILTRO ASPIRACION BOMBA	
4	42092	GUIDA FILTRO ASPIRAZIONE U70 GUIDE FILTRE ASPIRATION FÜHRUNG, ABSAUG.FILTER U70 ASPIRATION FILTER SLIDE GUIA FILTRO ASPIRACION U70	
5	472061	RONDELLA X GUIDA CESTO CL.3 RONDELLE UNTERLEGSCHEIBE, FÜR KORBFÜHRUNG KL.3 WASHER arandela	
6	224031 *Recommended spare parts*	PRESSOSTATO DIGITALE 560-AC-002 PRESSOSTAT DRUCKWAECHTER PRESSURE SWITCH PRESOSTATO	
7	423011	FASCETTA SERRAGGIO TUBI A MOLLA 8.1 Collier de serrage SCHELLE, FEDER HOSE CLAMP ABRAZADERA	
8	143235 *Recommended spare parts*	TUBO 4x7 SILICONE TRASPARENTE CRP TUYAU SCHLAUCH 4X7 SILIKON DURCHS. CRP PIPE MANGUITO	
10	70600 *Recommended spare parts*	TRAPPOLA ARIA ESTERNA cloche de pression Glocke fur druckschalter AIR TRAP for pressure switch CAMPANA PRESOSTATO	
11	437098 *Recommended spare parts*	GUARNIZIONE JOINT DICHTUNG FUER LUFTFALLE GASKET JUNTA	
12	417120 *Recommended spare parts*	DADO ECROU KUNSTSTOFFMUTTER 1-1/4 NUT TUERCA	
13	H.775489-001	CLIP SONDA TEMPERATURA D5 soutien sonde de température KLIPP FÜR TEMP.FÜHLER D5 Support temperature probe Soporte sonda de temperatura	
14	231016 *Recommended spare parts*	SONDA TEMPERATURA SONDE TEMPERATURSONDE TEMPERATURE PROBE SONDA TEMPERATURA (AMPOLLA ACERO)	
15	74088	RESISTENZA 3000W RESISTANCE WIDERSTAND 3000W HEATING ELEMENT RESISTENCIA	
16	456002	guarnizione o-ring joint torique o-ring O-Ring 48x6,2 O-ring junta tórica o-ring	

17	69870	PROTEZIONE RESISTENZA BOILER PROTECTION RESISTANCE BOILER HEIZUNGSCHUETZ DES WARMWASSERBEREITERS BOILER HEATING ELEMENT PROTECTION PROTECCION RESISTENCIA CALENTADOR	
19	927057 *Recommended spare parts*	TERMOSTATO SICUREZZA THERMOSTAT THERMOSTAT, 3-KONTAKTE 90/110øC TYP LS1 THERMOSTAT TERMOSTATO 3 CONTACTOS 90/110ºC TIPO LS1	
20	41305	cestello in acciaio dotazione base panier en acier equipement de base Stahlkorb Basisausstattung STAINLESS STEEL BASIC RACK equipamiento basico cesta de acero	
21	K41400	KIT RICAMBIO PATTINI CESTO LAVAPENTOLE KIT PATINS POUR PANIERS KIT GLEITSCHUHE FUER KORBE KIT RACK SLIDING BLOCKS KIT PATINES PARA CESTAS	
22	209042 *Recommended spare parts*	DOSAT.PERIST.BRILLANTANTE+NR P/F MD DOSEUR PÉRISTALTIQUE PERISTALTISCHES DOSIERGERAET DOSING PUMP DOSIFICADOR	
23	209043 *Recommended spare parts*	DOSAT.PERIST.DETERGENTE P/F MD DOSEUR PÉRISTALTIQUE PERISTALTISCHES DOSIERGERAET DETERGENT DOSING PUMP DOSIFICADOR DETERG.	
24	143261 *Recommended spare parts*	TUBO SILICONE TUBE MEMBRANSCHLAUCH HOSE TUBITO	
25	143258 *Recommended spare parts*	TUBO "SANTOPRENE" CON RACCORDO TUYAU "SANTOPRENE" MEMBRANSCHLAUCH SANTOPREN "SANTOPRENE" PIPE TUBITO SANTOPRENE	
26	67042	STAFFA DOSATORI console de support Stützwinkel support bracket SOPORTE DOSIFICADORES PG ACABADO	
27	143005 *Recommended spare parts*	TUBO IN GOMMA TELATA 5X12 NERO TUYAU EN CAOUTCHOUC LIN 5X12 NOIR SCHLAUCH TP 5X11 (CASER/15/NL C4N) LINEN RUBBER PIPE 5X12 - BLACK TUBO PRES. TP 5x11 (CASER/15/NL C4N)	
28	H.775601 *Recommended spare parts*	TUBO 4x6 CRISTAL BLUE PVC TUYAU SCHLAUCH 4x6 CRISTAL BLAU PVC PIPE MANGUITO	
29	143194 *Recommended spare parts*	TUBO 4x6 CRISTAL TRASPARENTE TUYAU SCHLAUCH 4X6 CRISTAL, DURCHS. PIPE MANGUITO	
30	999348	GRUPPO RACCORDO INIEZIONE DETERGENTE JUNCTION CUVE POUR INJECTION DE DÉTERGEN WASCHMITTEL INJECTION SPÜLANSCHLUSS DETERGENT TANK FITTING UNIÓN CUBA PARA INYECCIÓN DE DETERGENTE	
31	121993	GRUPPO FILTRO+ZAVORRA DOSATORE filtre distributeur FILTERANORDNUNG filter aid dispenser filtro dispensador	
32	203425-1	CABLAGGIO COLLEGAMENTO PRESSOSTATO ITW L950 (NERC CABLAGE WIRING WIRING CABLEADO	

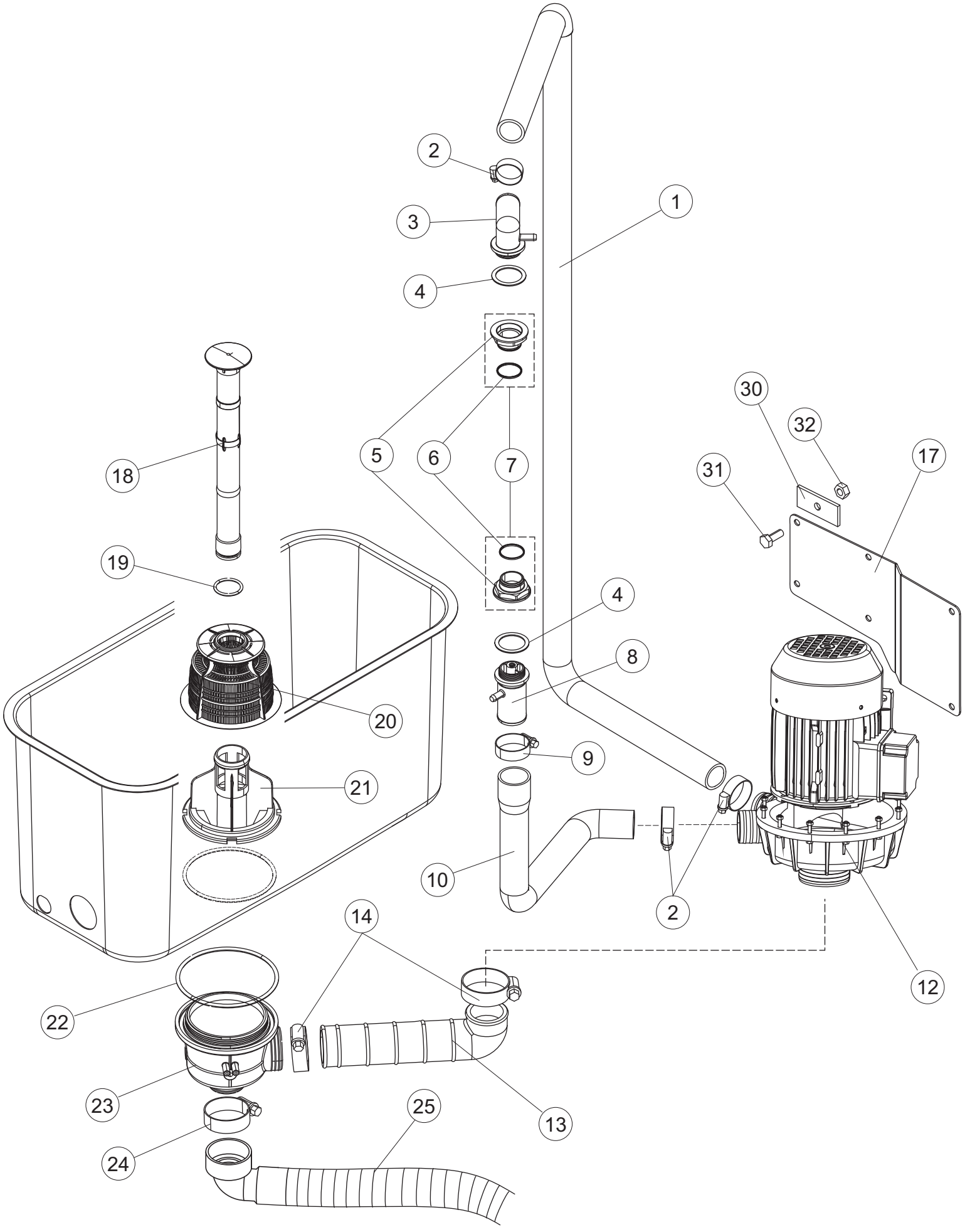
1
2
3
4
5
6
7
8
9
10
12
13
14
17
18
19
20
21
22
23
24
25
30
31
32

Listino componenti per pagina 4

1	67019	TUBO MANDATA LAVAGGIO SUPERIORE LP.4 DURITE FOERDERLEITUNG SPUELEN SLEEVE TUBO IMPULSION LAVADO	
2	CFS1A	FASCETTA SERRAGGIO TUBI Collier de serrage SCHELLE, SCHRAUBE TORRO W1/W2B 40-60/12 HOSE CLAMP ABRAZADERA	
3	67180	RACCORDO LAVAGGIO RACCORD ANSCHLUSS PIPE FITTING RECOGIDA	
4	80182	GUARNIZIONE MANDATA JOINT DICHTUNG, UNTEN VERSORGUNG DURCHSCHUBSP. RV. GASKET JUNTA	
5	80281	GHIERA LAVAGGIO INFERIORE INTERNA DOUILLE GEWINDERING, INN. UNT. SPÜLEN, HOCH RING NUT CONTERA VIROLA	
6	303032	ANELLO INOX DI TENUTA LAVAGGIO X5 BAGUE DICHTUNGSRING, INOX SPÜL. X5 INOX RING ANILLO INOX DE ESTANQ. LAVADO X5	
7	80285	GHIERA LAVAGGIO INFERIORE INTERNA DOUILLE GEWINDERING RING NUT CONTERA VIROLA	
8	67179	RACCORDO LAVAGGIO RACCORD ANSCHLUSS PIPE FITTING RECOGIDA	
9	CFS2	FASCETTA TORRO W1/W2B 50-70/12 BANDE DE SERRAGE TORRO W1/W2B 50-70/12 SCHELLE, TORRO W1/W2B 50-70/12 CLAMP, TORRO W1/W2B 50-70/12 ABRAZADERA TORRO W1/W2B 50-70/12	
10	67004	TUBO MANDATA LAVAGGIO TUYAU SCHLAUCH PIPE MANGUITO	
12	70100 *Recommended spare parts*	POMPA LAVAGGIO POMPE DE LAVAGE PUMPE WASHPUMP bomba de lavado	
13	80186	MANICOTTO ASPIRAZIONE tuyau d'aspiration MUFFE, ABSAUG.PUMPE RIVER suction pipe tubo de aspiración	
14	CFS3	FASCETTA A VITE TORRO W2B 60-80/12 BANDE DE SERRAGE A VIS TORRO W2B 60-80/12 SCHELLE, SCHRAUBE TORRO W2B 60-80/12 CLAMP, HOSE-TYPE TORRO W2B 60-80/12 ABRAZADERA CON TORNILLO TORRO W2B	
16	67592	MANICOTTO ASPIRAZIONE EPDM 70SH tuyau d'aspiration SAUGROHR suction pipe tubo de aspiración	
17	67002	STAFFA console de support Stützwinkel support bracket ménsula de soporte	

18	80250	TROPPOPIENO TROP PLEIN ÜBERLAUF RIVER 82/83 OVERFLOW PIPE REBOSE	
19	CGR4131NT *Recommended spare parts*	O-RING O-RING O-RING 4131 SCHWARZE SCHRAUBE SH.70 O-RING O-RING	
20	121081	FILTRO FILTRE FILTER, PUMPE GRAU 44/TERZ. STAINER FILTRO	
21	80470	GHIERA SCARICO DOUILLE GEWINDERING, ABLAUF RING NUT CONTERA VIROLA	
22	456040	guarnizione o-ring joint torique o-ring O-Ring 201 NBR70 22 O-ring junta tórica o-ring	
23	136020 *Recommended spare parts*	CORPO ASPIRAZIONE E SCARICO CORPS D'ASPIRATION/VIDANGE GEHAUSE, EINLASS/ABLASS 22/44 ASPIRATION AND DRAIN BODY CUERPO ASPIRACION/DESCARGA	
24	CFS1	FASCETTA SERRAGGIO TUBI Collier de serrage SCHLAUCHSCHELLE TORRO 35-50/9 HOSE CLAMP ABRAZADERA	
25	143136	TUBO SCARICO VERS.NE INTEGR.22 TUYAU DE VIDANGE ABLASSROHR - VOLLST. VERSION 22 DRAIN HOSE TUBO DESCARGA	
30	926064	guarnizione smorza vibrazioni joint amortit les vibrations UNTERFUSS FÜR SCHWINGUNGSDAMPF. PUMPE ZEICHN.002 seal dampens vibrations sello amortigua las vibraciones	
31	CVZ124F	VITE TE/FLANG/ZIG M8X20 FE/ZN DIN6921	
32	CDZ208R	DADO ZINC 8MA CON RONDELLA DENTELLATA ECROU GALV. 8MA AVEC RONDELLE DENTELEE SCHRAUBENM., VERZ. 8MA MIT GEZAHN. UNTERLEGSCHEIBE NUT, GALV. 8MA W/TOOTHED WASHER TUERCA GALV. 8MA CON ARANDELA DENTELLADA	

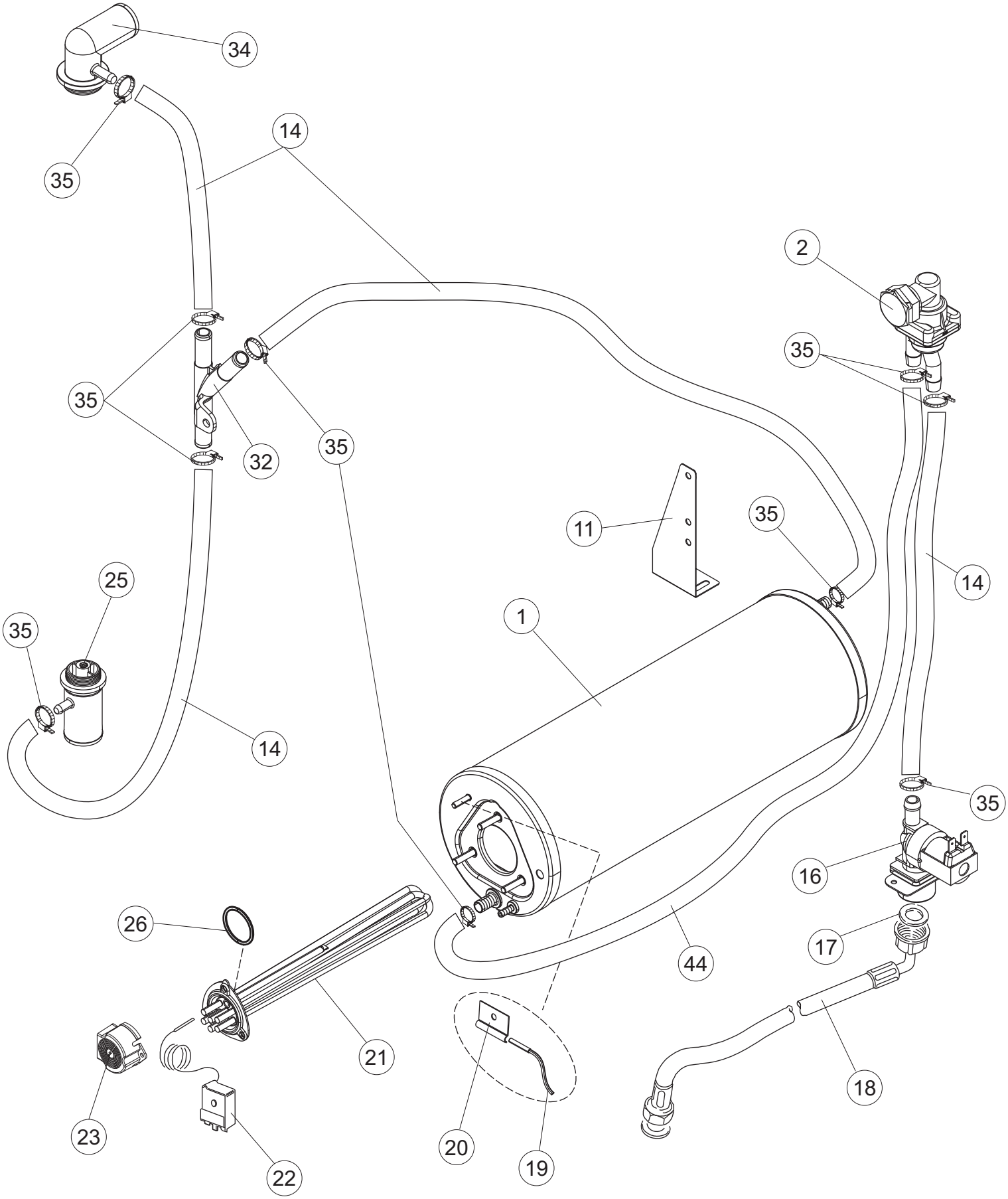
34
35
14
2
35
35
32
35
11
35
14
25
35
1
14
35
16
26
17
44
21
18
23
20
19
22

Listino componenti per pagina 5

1	67860	BOILER 6 LITRI LP CHAUDIÈRE BOILER BOILER CALDERIN	
2	144010NT *Recommended spare parts*	VALVOLA A/R CAPLET Rückschlagventil non-return valve válvula de retención	
11	42616	STAFFA BOILER console de support CHAUDIÈRE WARMWASSERBEREITER Stützwinkel BOILER BRACKET SOPORTE CALENTADOR	
14	143004	TUBO TUYAU ROHR, DRUCKSCHALTER TP 10X17 (CASER/15NL C4N) PIPE TUBO PRES. TP 10X17 (CASER/15NL C4N)	
16	240016 *Recommended spare parts*	ELETTROVALVOLA ELECTROVANNE ZUFLUSSVENTIL 1-WEG 3/4 230V DROSS.16L SOLENOID VALVE ELECTROVALVULA	
17	437041	GUARNIZIONE 3/4 JOINT DICHTUNG 3/4 GASVERSORG. GASKET JUNTA	
18	143270	TUBO CARICO 3/4G D.I.10 2MT TUYAU SCHLAUCH INLET WRAS PIPE TUBO WRAS	
19	231016 *Recommended spare parts*	SONDA TEMPERATURA SONDE TEMPERATURSONDE TEMPERATURE PROBE SONDA TEMPERATURA (AMPOLLA ACERO)	
20	H.775489-001	CLIP SONDA TEMPERATURA D5 soutien sonde de température KLIPP FÜR TEMP.FÜHLER D5 Support temperature probe Soporte sonda de temperatura	
21	230083C *Recommended spare parts*	KIT RESISTENZA 6KW RESISTANCE 6KW KIT HEIZUNG REB230083 (6KW) HEATING ELEMENT 6KW RESISTENCIA 6KW	
22	927057 *Recommended spare parts*	TERMOSTATO SICUREZZA THERMOSTAT THERMOSTAT, 3-KONTAKTE 90/110øC TYP LS1 THERMOSTAT TERMOSTATO 3 CONTACTOS 90/110ºC TIPO LS1	
23	69870	PROTEZIONE RESISTENZA BOILER PROTECTION RESISTANCE BOILER HEIZUNGSCHUETZ DES WARMWASSERBEREITERS BOILER HEATING ELEMENT PROTECTION PROTECCION RESISTENCIA CALENTADOR	
25	67179	RACCORDO LAVAGGIO RACCORD ANSCHLUSS PIPE FITTING RECOGIDA	
26	456002	guarnizione o-ring joint torique o-ring O-Ring 48x6,2 O-ring junta tórica o-ring	
32	143268 *Recommended spare parts*	GIUNZIONE A "Y" DI RISCIACQUO JONCTION "Y" Y-STUECK JuNCTION "Y" UNION "Y"	

34	67180	RACCORDO LAVAGGIO RACCORD ANSCHLUSS PIPE FITTING RECOGIDA	
35	927322	FASCETTA SERRAGGIO TUBI Collier de serrage SCHLAUCHSCHELLE 12-22 HOSE CLAMP ABRAZADERA	
44	41556	TUBO SAGOMATO TUYAU ROHR PIPE MANGUITO	

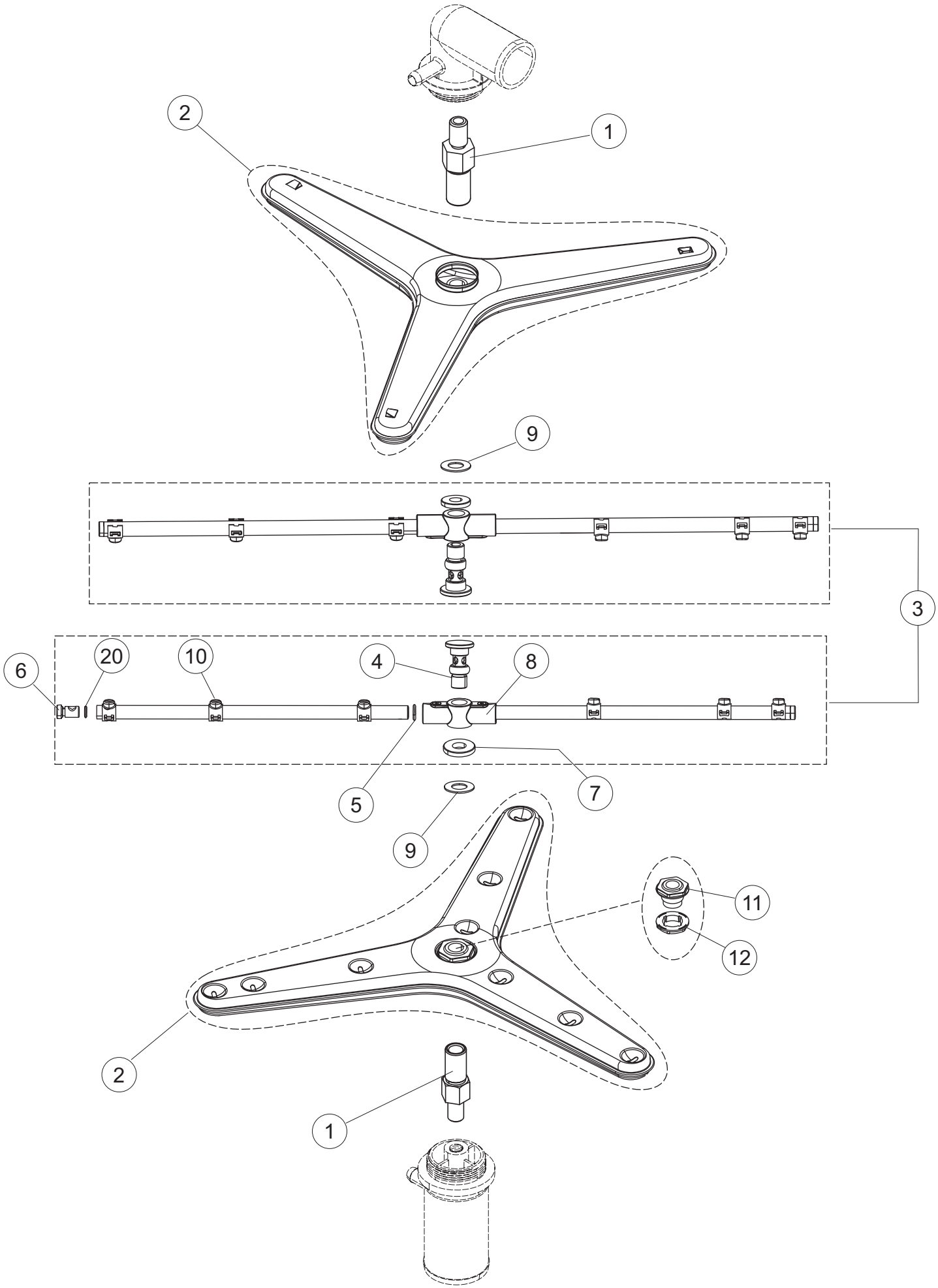
2
1
9
3
6
20
10
4
8
5
7
9
11
12
2
1

Listino componenti per pagina 6

1	67563	PERNO INFERIORE LP 2018 PIVOT DREHARMSPINDEL PIVOT PERNO	
2	67310	BRACCIO LAVAGGIO INOX LP1/2 CPL BRAS DE LAVAGE INOX LP1/2 CPL SPUELARM INOX LP1/2 CPL WASH ARM INOX LP1/2 CPL BRAZO LAVADO INOX LP1/2 CPL	
3	41677	BRACCIO COMPLETO RISCIACQUO BRAS DE RINCAGE COMPLET NACHSPUELUNGSARM - DREHBAR - FUER KOCHTO EPFESPUI COMPLETE RINSE ARM BRAZO ACLARADO COMPLETO	
4	80644	PERNO PIVOT ZAPFEN PIVOT PERNO	
5	456019	guarnizione o-ring joint torique o-ring O-Ring 2037 O-ring junta tórica o-ring	
6	926132	TAPPO PL.X BRACCIO DI RISC.(DWT312) EMBOUT EN PLASTIQUE POUR RAMPE DE RINC. PFROPFEN, KUNST. FÜR NACHSPÜLARM (DWT312) PLASTIC RINSE ARM CAP TAPON PL. X BRAZO DE ENJUAGUE (DWT312)	
7	80679	GHIERA M12 INOX DOUILLE RING RING NUT CONTERA VIROLA	
8	69632	CORPO BRACCIO CORPS BRAS KOERPER DES NACHSPUELARMES BODY ARM CUERPO BRAZO	
9	80622 *Recommended spare parts*	RONDELLA RONDELLE RING 22X11,5X1 WASHER ANILLO DE TEFLON 22X11,5X1	
10	140036 *Recommended spare parts*	SPRUZZO RISCIACQUO GLICEUR DÜSE RINSE JET ROCIADOR ENJUAGUE	
11	80310	SUPPORTO BRACCIO SUPPORT RAMPE DE LAVAGE GRIS (RAL7001) HALTER, SPÜLLANZE/SPÜL. (RAL7001) GREY WASH ARM HOLDER (RAL 7001) SOPORTE LANC/LAVADO (RAL7001)	
12	80314	GHIERA LANCIA LAVAGGIO DOUILLE SCHRAUBENMUTTER, SPÜLLANZE GRAU RING NUT CONTERA VIROLA	
20	456030	guarnizione o-ring joint torique o-ring O-Ring 106 (CGR106) O-ring junta tórica o-ring	

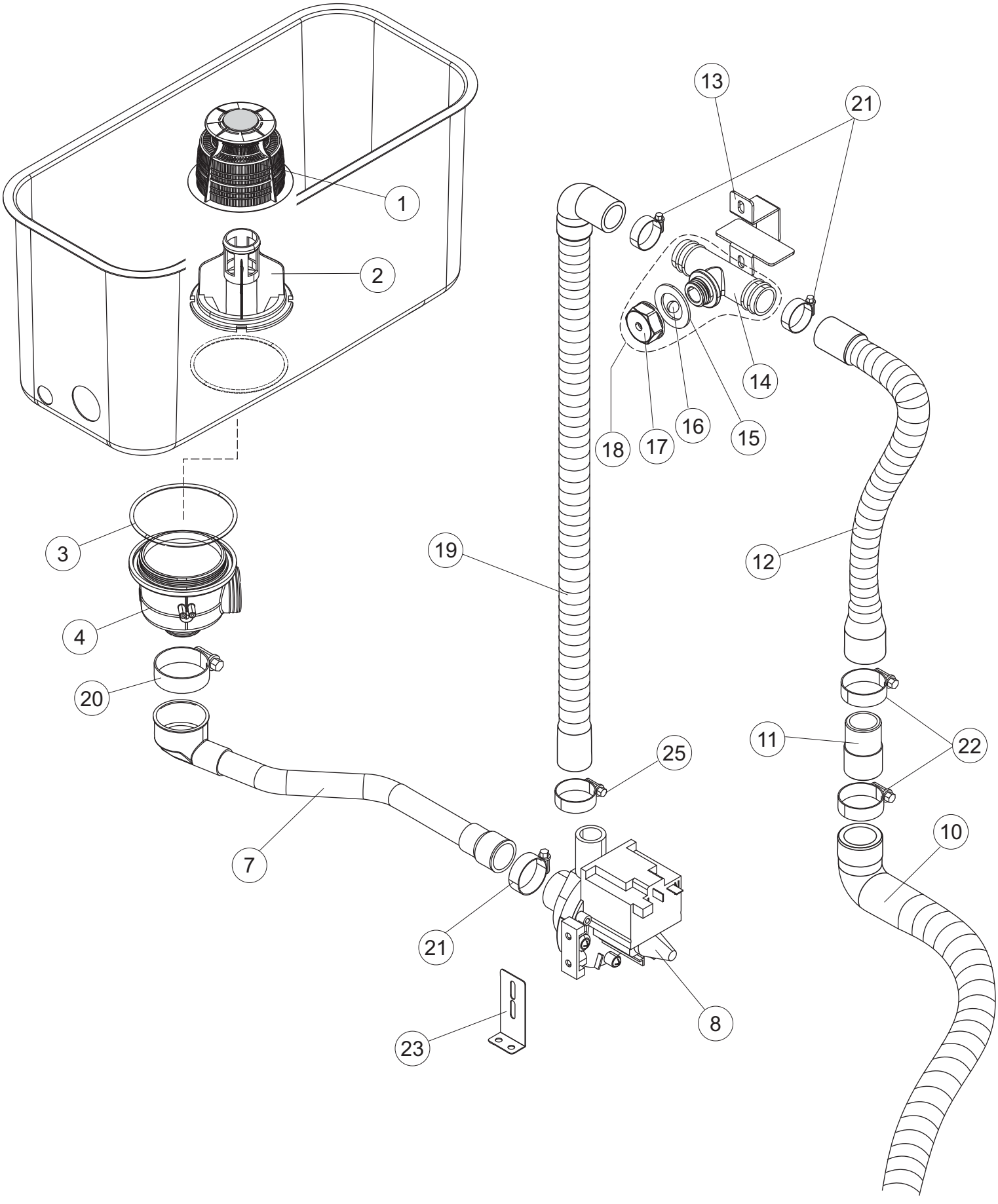

DRAIN PUMP

MOD LP-60ECO

Listino componenti per pagina 7

1	121115	FILTRO PER POMPA LAVAGGIO FILTRE POMPE DE LAVAGE PUMPENANSAUGSIEB FUER DURCHSCHUBSPUELER CRP DRAIN PUMP FILTER FILTRO BOMBA	
2	80470	GHIERA SCARICO DOUILLE GEWINDERING, ABLAUF RING NUT CONTERA VIROLA	
3	456040	guarnizione o-ring joint torique o-ring O-Ring 201 NBR70 22 O-ring junta tórica o-ring	
4	136020 *Recommended spare parts*	CORPO ASPIRAZIONE E SCARICO CORPS D'ASPIRATION/VIDANGE GEHAUSE, EINLASS/ABLASS 22/44 ASPIRATION AND DRAIN BODY CUERPO ASPIRACION/DESCARGA	
7	127056	MANICOTTO DI ASPIRAZIONE POMPA MANCHON D'ASPIRATION POMPE MUFFE, ABSAUG.ABLASSPUMPE VICT.32 PUMP ASPIRATION SLEEVE MANGUITO ASP. P. S. VICT. 32	
8	130177 *Recommended spare parts*	POMPA DI SCARICO 50HZ POMPE DE VIDANGE 50HZ ABFLUSSPUMPE 50HZ. DRAIN PUMP 50HZ BOMBA DESAGUE 50HZ	OPTIONAL
10	143252	TUBO SCARICO LA50 TUYAU DE VIDANGE ABLAUFLEITUNG DRAIN HOSE TUBO DESCARGA	
11	70167	RACCORDO SCARICO RACCORD VIDANGE ABLAUFGARNITUR DRAIN CONNECTION EMPALME SALIDA DESCARGA	
12	70110	TUBO DI SCARICO TUYAU DE VIDANGE ABFLUSSSCHLAUCH DRAIN HOSE TUBO DESCARGA	
13	73574	STAFFA EQUERRE DE FIXATION BEF.WINKEL BRACKET BRIDA DE APOYO	
14	144024	VALVOLA SFIATO SOUPAPE DE SOUPIRAL LUFTLOCH-VENTIL VENT VALVE VALVULA ALIVIAD. DESCARGA INT.CUBETA	
15	437083	GUARNIZIONE GOMMA D32D19.5S1.5 JOINT DICHTUNG, GUMMI D32D19.5S1.5 GASKET JUNTA	
16	476008	SFERA.VALVOLA.LA50.HOST.D=5/16" SPHERE KUGELHAHN SPHERE ESFERA	
17	468199	RACCORDO MASCHIO VALVOLA SF.E DVGW LA50 RACCORD ANSCHLUSSSTUECK LA50 PIPE FITTING RECOGIDA	
18	73576	VALVOLA SFIATO SP2 SOUPAPE DE SOUPIRAL SP2 VENTIL SP2 SP2 VENT VALVE VALVULA ALIVIAD. SP2	

19	80702	TUBO SCARICO D19 TUYAU DE VIDANGE ROHRE DRAIN HOSE TUBO DESCARGA	
20	CFS1A	FASCETTA SERRAGGIO TUBI Collier de serrage SCHELLE, SCHRAUBE TORRO W1/W2B 40-60/12 HOSE CLAMP ABRAZADERA	
21	CFS18	FASCETTA SERRAGGIO TUBI Collier de serrage SCHLAUCHSCHELLE 20-32/9 HOSE CLAMP ABRAZADERA	
22	CFS1	FASCETTA SERRAGGIO TUBI Collier de serrage SCHLAUCHSCHELLE TORRO 35-50/9 HOSE CLAMP ABRAZADERA	
23	80712	STAFFA EQUERRE DE FIXATION STÜTZWINKEL BRACKET BRIDA DE APOYO	
25	CFS18	FASCETTA SERRAGGIO TUBI Collier de serrage SCHLAUCHSCHELLE 20-32/9 HOSE CLAMP ABRAZADERA	

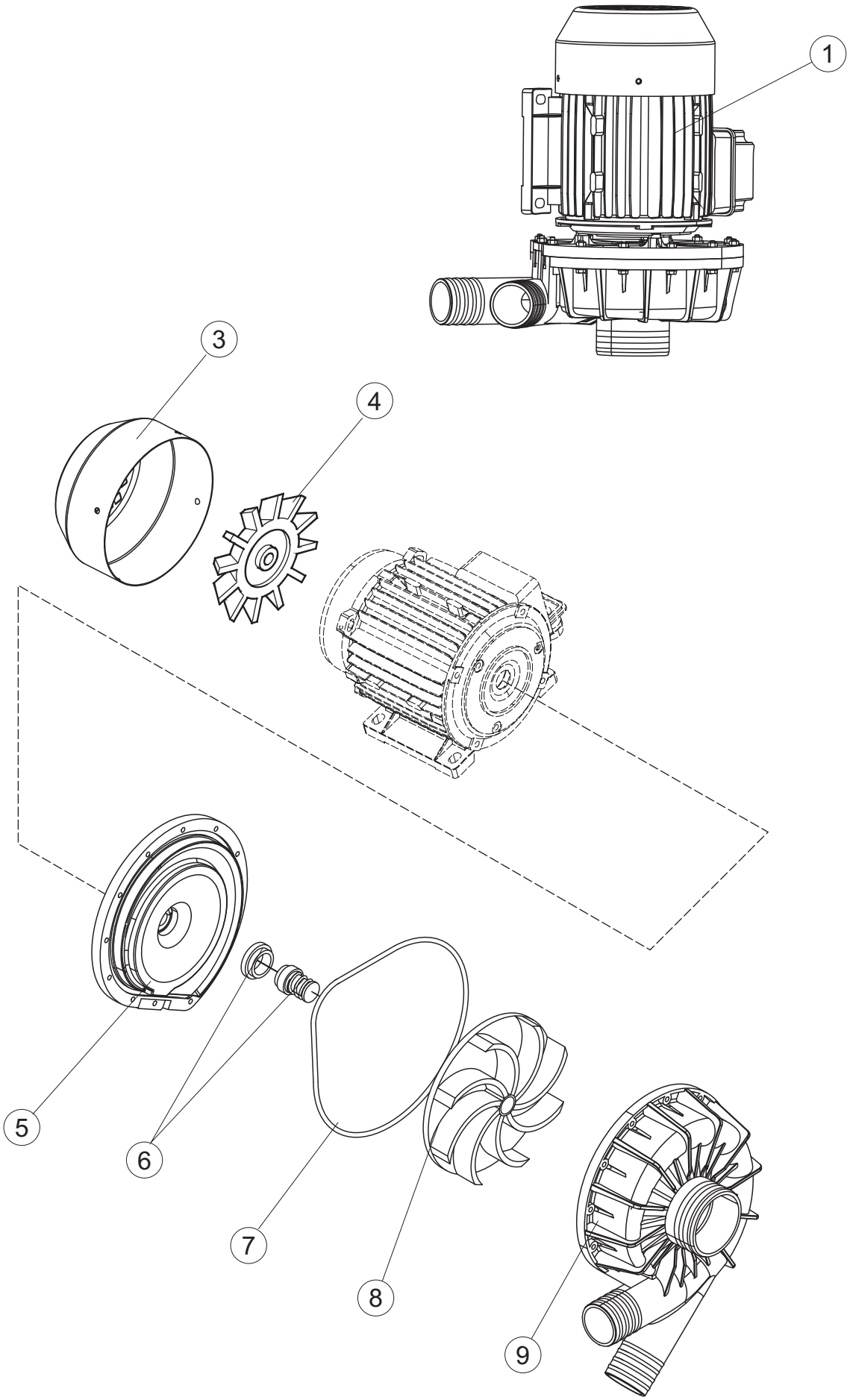
1
3
4
5
6
7
8
9

Listino componenti per pagina 8

1	70100 *Recommended spare parts*	POMPA LAVAGGIO POMPE DE LAVAGE PUMPE WASHPUMP bomba de lavado	
3	70940	COPRIVENTOLA ELETTROPOMPA COUVRE-HELICE POUR POMPE LAUFRAD-DECKEL FUER PUMPE 1240 ELECTROPUMP FAN COVER CUBREVENTILADOR ELECTROBOMBA	
4	70939	VENTOLA POMPA 2400 VENTILATEUR POUR MOTOPOMPE LAUFRAD FUER MOTORPUMPE WASHPUMP FUN ROTOR PARA ELECTROBOMBA	
5	70941	FLANGIA BRIDE FLANSCH FLANGE BRIDA	
6	70942	TENUTA MECCANICA ETANCHEITE MECHANIQUE POUR MOTOPOMPE MECHANISCHE DICHTUNG WASHPUMP SHAFT SEAL SELLO MECANICO PARA ELECTROBOMBA	
7	70943	O-RING O-RING O-RING O-RING O-RING	
8	70944	GIRANTE ELETTROPOMPA IMPULSEUR MOTOPOMPE FLUEGELRAD FUER MOTORPUMPE ELECTROPUMP IMPELLER ROTOR PARA ELECTROBOMBA	
9	70945	CHIOCCIOLA ELETTROPOMPA couvercle de la turbine PUMPENGEHAEUSE ELECTROPUMP HOUSING ESPIRAL PARA ELECTROBOMBA	

RECOMMENDED SPARE PARTS

PAG	POS	COD		
1	10	41583	GUARNIZIONE PORTA JOINT POUR PORTE TUERDICHTUNG DOOR GASKET JUNTA PUERTA	
1	16	80105	TAMPONE FERMO PORTA / CAPPA arrêt de porte / CAPOT Türanschlag HOOD / DOOR STOP parada de la puerta	
1	19	486078	VITE IN ACCIAIO INOSSIDABILE SPEC. 6MA VIS EN ACIER INOXYDABLE 6MAX30 T.1/2 TC SCHRAUBE TC-CE M6X40 INOX STAINLESS STEEL SCREW 6MAX30 T.1/2 TC TORNILLO TC-CE M6X40 INOX	
1	25	80871	MICRO MAGNETICO CONTACTE MAGNETIQUE TUERKONTAKTSCHALTER MAGNETIC DOOR SWITCH CONTACTO MAGNETICO	
2	3	228010	FUSIBILE 5X20 T4A RITARDATO 250V FUSIBLE SICHERUNG 5X20 T4A FUSE FISIBLE	
2	11	73351	CONTATTORE CONTACTEUR KONTAKT-GEBER 230-50/60HZ CONTACTOR CONTACTOR	
2	12	73350	CONTATTORE CONTACTEUR KONTAKT-GEBER 230-50/60HZ CONTACTOR CONTACTOR	
2	16	215041-9	SCHEDA 215041+FIRMWARE34(FW_0_XXJ.Q014) CARTE ELECTRONIQUE 215041+FIRMWARE34 (FW_0_XXJ.Q01 KARTE ELEKTRONIK 215041+FIRMWARE34 (FW_0_XXJ.Q014) MAIN BOARD 215041+FIRMWARE34 (FW_0_XXJ.Q014) TARJETA electrónica 215041+FIRMWARE34 (FW_0_XXJ.Q014)	
2	20	228010	FUSIBILE 5X20 T4A RITARDATO 250V FUSIBLE SICHERUNG 5X20 T4A FUSE FISIBLE	
2	21	80934	CAVO FLAT CABLE FLAT FLACHKABEL FLAT CABLE CABLE FLAT	
2	22	80889	TASTIERA COMANDI touche clavier commande TASTATURPLATINE CONTROL KEYBOARD TECLADO DE COMANDOS	
2	23	417119	DADO ECROU SCHRAUBENMUTTER, M3 KUNST. WEISS NUT TUERCA	
2	24	419036	DISTANZIALI SCHEDA ENTRETOISE X CARTE ELECTRONIQUE ABSTANDSSTÜCK, M3 INTERFACE BOARD DISTANCE KEEPERS DISTANCIADOR M3	
3	6	224031	PRESSOSTATO DIGITALE 560-AC-002 PRESSOSTAT DRUCKWAECHTER PRESSURE SWITCH PRESOSTATO	
3	8	143235	TUBO 4x7 SILICONE TRASPARENTE CRP TUYAU SCHLAUCH 4X7 SILIKON DURCHS. CRP PIPE MANGUITO	
3	10	70600	TRAPPOLA ARIA ESTERNA cloche de pression Glocke fur druckschalter AIR TRAP for pressure switch CAMPANA PRESOSTATO	

RECOMMENDED SPARE PARTS

PAG	POS	COD		
3	11	437098	GUARNIZIONE JOINT DICHTUNG FUER LUFTFALLE GASKET JUNTA	
3	12	417120	DADO ECROU KUNSTSTOFFMUTTER 1-1/4 NUT TUERCA	
3	14	231016	SONDA TEMPERATURA SONDE TEMPERATURSONDE TEMPERATURE PROBE SONDA TEMPERATURA (AMPOLLA ACERO)	
3	19	927057	TERMOSTATO SICUREZZA THERMOSTAT THERMOSTAT, 3-KONTAKTE 90/110øC TYP LS1 THERMOSTAT TERMOSTATO 3 CONTACTOS 90/110ºC TIPO LS1	
3	22	209042	DOSAT.PERIST.BRILLANTANTE+NR P/F MD DOSEUR PÉRISTALTIQUE PERISTALTISCHES DOSIERGERAET DOSING PUMP DOSIFICADOR	
3	23	209043	DOSAT.PERIST.DETERGENTE P/F MD DOSEUR PÉRISTALTIQUE PERISTALTISCHES DOSIERGERAET DETERGENT DOSING PUMP DOSIFICADOR DETERG.	
3	24	143261	TUBO SILICONE TUBE MEMBRANSCHLAUCH HOSE TUBITO	
3	25	143258	TUBO "SANTOPRENE" CON RACCORDO TUYAU "SANTOPRENE" MEMBRANSCHLAUCH SANTOPREN "SANTOPRENE" PIPE TUBITO SANTOPRENE	
3	27	143005	TUBO IN GOMMA TELATA 5X12 NERO TUYAU EN CAOUTCHOUC LIN 5X12 NOIR SCHLAUCH TP 5X11 (CASER/15/NL C4N) LINEN RUBBER PIPE 5X12 - BLACK TUBO PRES. TP 5x11 (CASER/15/NL C4N)	
3	28	H.775601	TUBO 4x6 CRISTAL BLUE PVC TUYAU SCHLAUCH 4x6 CRISTAL BLAU PVC PIPE MANGUITO	
3	29	143194	TUBO 4x6 CRISTAL TRASPARENTE TUYAU SCHLAUCH 4X6 CRISTAL, DURCHS. PIPE MANGUITO	
4	12	70100	POMPA LAVAGGIO POMPE DE LAVAGE PUMPE WASHPUMP bomba de lavado	
4	19	CGR4131NT	O-RING O-RING O-RING 4131 SCHWARZE SCHRAUBE SH.70 O-RING O-RING	
4	23	136020	CORPO ASPIRAZIONE E SCARICO CORPS D'ASPIRATION/VIDANGE GEHAUSE, EINLASS/ABLASS 22/44 ASPIRATION AND DRAIN BODY CUERPO ASPIRACION/DESCARGA	
5	2	144010NT	VALVOLA A/R CAPLET Rückschlagventil non-return valve válvula de retención	
5	16	240016	ELETTROVALVOLA ELECTROVANNE ZUFLUSSVENTIL 1-WEG 3/4 230V DROSS.16L SOLENOID VALVE ELECTROVALVULA	

RECOMMENDED SPARE PARTS

PAG	POS	COD		
5	19	231016	SONDA TEMPERATURA SONDE TEMPERATURSONDE TEMPERATURE PROBE SONDA TEMPERATURA (AMPOLLA ACERO)	
PAG	**POS**	**COD**		
5	21	230083C	KIT RESISTENZA 6KW RESISTANCE 6KW KIT HEIZUNG REB230083 (6KW) HEATING ELEMENT 6KW RESISTENCIA 6KW	
PAG	**POS**	**COD**		
5	22	927057	TERMOSTATO SICUREZZA THERMOSTAT THERMOSTAT, 3-KONTAKTE 90/110øC TYP LS1 THERMOSTAT TERMOSTATO 3 CONTACTOS 90/110ºC TIPO LS1	
PAG	**POS**	**COD**		
5	32	143268	GIUNZIONE A "Y" DI RISCIACQUO JONCTION "Y" Y-STUECK JuNCTION "Y" UNION "Y"	
PAG	**POS**	**COD**		
6	9	80622	RONDELLA RONDELLE RING 22X11,5X1 WASHER ANILLO DE TEFLON 22X11,5X1	
PAG	**POS**	**COD**		
6	10	140036	SPRUZZO RISCIACQUO GLICEUR DÜSE RINSE JET ROCIADOR ENJUAGUE	
PAG	**POS**	**COD**		
7	4	136020	CORPO ASPIRAZIONE E SCARICO CORPS D'ASPIRATION/VIDANGE GEHAUSE, EINLASS/ABLASS 22/44 ASPIRATION AND DRAIN BODY CUERPO ASPIRACION/DESCARGA	
PAG	**POS**	**COD**		
7	8	130177	POMPA DI SCARICO 50HZ POMPE DE VIDANGE 50HZ ABFLUSSPUMPE 50HZ. DRAIN PUMP 50HZ BOMBA DESAGUE 50HZ	OPTIONAL
PAG	**POS**	**COD**		
8	1	70100	POMPA LAVAGGIO POMPE DE LAVAGE PUMPE WASHPUMP bomba de lavado	

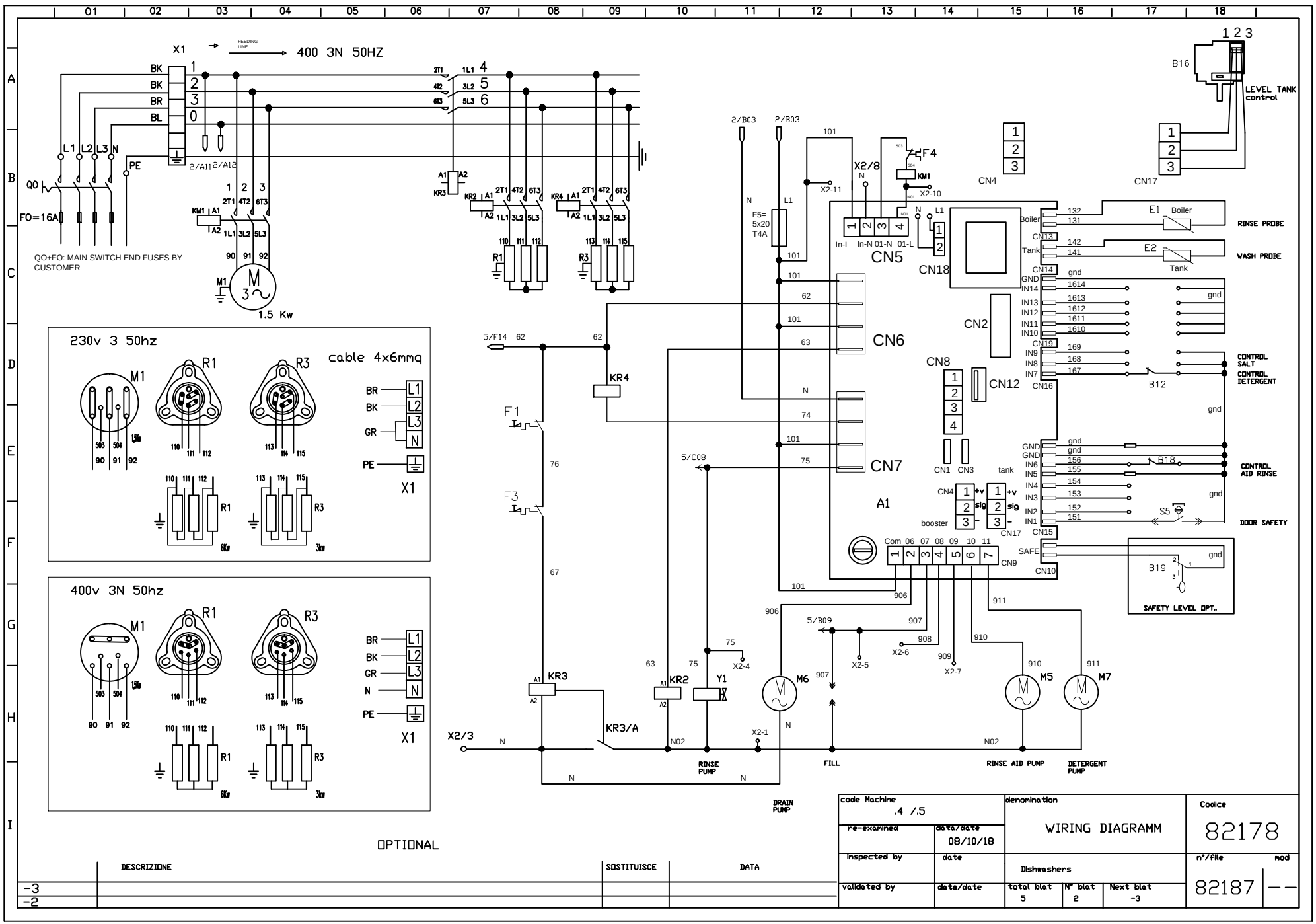

DESCRIZIONE	SOSTITUISCE	DATA
-3		
-2		

code Machine .4 /.5		denomination WIRING DIAGRAMM			Codice 82178
re-examined	data/date 08/10/18				
inspected by	date	Dishwashers			n°/file 82187 mod --
validated by	date/date	total blat 5	N° blat 2	Next blat -3	

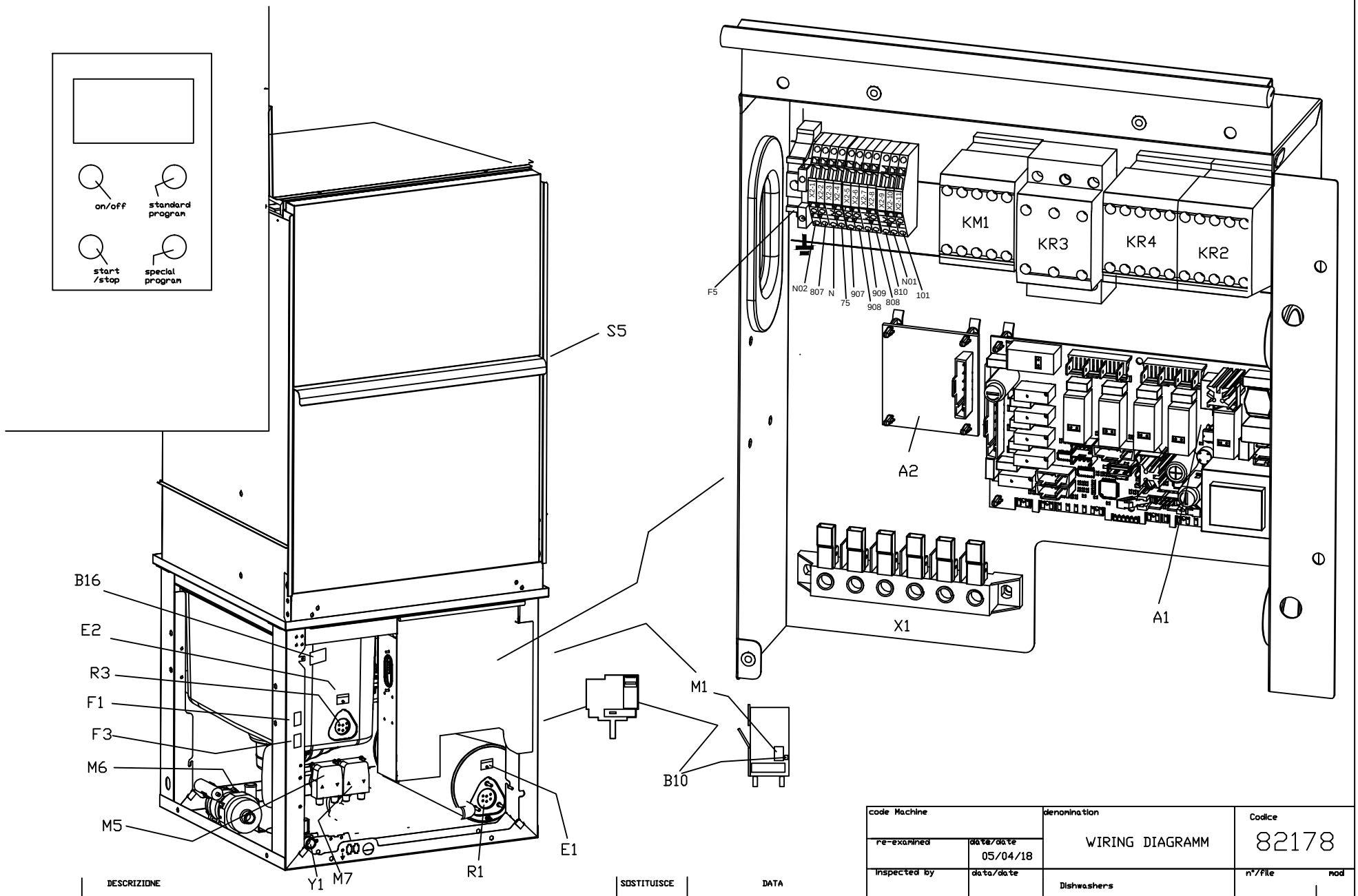

DESCRIZIONE	SOSTITUISCE	DATA

code Machine		denomination		Codice	
re-examined	date/date 05/04/18	WIRING DIAGRAMM		82178	
inspected by	data/date	Dishwashers		n°/file	mod
validated by	date/date	total blat 5	N° blat 3	Next blat 4	821187L –

M9	VENTOLA CONDENSA VAPORI STEAM CONDENSOR FAN	VENTILATEUR DE CONDENSEUR DE VAPEUR DAMPFKONDENSATORLUFTER			
S5	MICROINTERRUTTORE MAGNETICO MAGNETIC SAFETY MICROSWITCH	MICROINTERRUPTEUR MAGNETIQUE MAGNETISCHER SICHERHITSSCHALTER			
F1	TERMOSTATO SICUREZZA BOILER SAFETY BOOSTER HEATER THERMOSTAT	THERMOSTAT DE SICURITE DU BOYLER SICHERHEITZUNG			
F3	TERMOSTATO SICUREZZA VASCA SAFETY TANK HEATER THERMOSTAT	THERMOSTAT DE SICURITE CUVE SICHERHEITS– TANKTHERMOSTAT			
R3	RESISTENZA VASCA LAVAGGIO WASH TANK HEATING ELEMENT	RESISTANCE CUVE DE LAVAGE WASCHTANKHEIZUNG			
R1	RESISTENZA BOILER BOOSTER HEATER HEATING ELEMENT	RESISTANCE BOYLER BOILERHEIZUNG			
M5	ELETTRODOSATORE TENSIOATTIVO EL. RINSEAID INJECTOR	DOSEUR EL. PRODUIT RINCAGE NACHSPUELMITTELDOSIERGERAET			
M6	ELETTROPOMPA DI SCARICO DRAIN PUMP	MOTEUR POMPE VIDANGE MOTOR LAUGENPUMPE			
M3	ELETTROPOMPA AUMENTO PRESSIONE RINSE BOOSTER PUMP	ELECTROPOMPE AUGMENT PRESSION DRUCKSTEIGERUNGSPUMPE			
M7/M8	ELETTRODOSATORE DETERSIVO EL. DETERGENT INJECTOR	DOSEUR EL. DETERGENT SPUEL MITTELDOSIERGERAET			
M1	ELETTROPOMPA LAVAGGIO WASH ELECTRIC PUMP	ELECTROPOMPE LAVAGE ELEKTRISCHE UMAELZPUMPE			
KR3	TELERUTTORE SICUREZZA LINEA SAFETY/LINE CONTACTOR	CONTACTEUR DE SECURITE DE LIGNE NETZSICHERHEITSSCHUTZ			
KR4	TELERUTTORE RESISTENZA VASCA TANK HEATER CONTACTOR	CONTACTEUR RESISTANCE BOYLER LUFTSCHUETZ F. BOILERHEITZUNG			
KR2	TELERUTTORE RESISTENZA BOILER BOOSTER HEATER CONTACTOR	CONTACTEUR RESISTANCE BOYLER LUFTSCHUETZ F. BOILERHEITZUNG			
KM1	TELERUTTORE ELETTROPOMPA LAVAGGIO WASCH PUMP CONTACTEUR	CONTACTEUR ELECTROPOMPE LAVAGE SCHUETZ F. UMWAELPUMPE			
Y1	ELETTROVALVOLA CARICAMENTO FILL SOLENOID VALVE	ELECTROVANNE DE RINCAGE MAGNETVENT FUER NACHSPUELUNG			
B19	PRESSOSTATO LIVELLO DI SICUREZZA SAFETY LEVEL PRESSOSTAT	PRESSOSTAT DE NIVEAU DE SECURITE SICHERHEITSNIVEAU DRUCKSCHALTER			
E2	SONDA CONTROLLO VASCA PROBE TANK HEATER	THERMOSTAT RESISTANCE CUVE THANKHEIZUNGTHERMOSTAT			
E1	SONDA CONTROLLO BOILER BOOSTER HEATER THERMOSTAT	THERMOSTAT RESISTANCE BOYLER BOILERHEIZUNG			
C1	CONDESATORE CAPACITOUR	CONDENSEUR KONDENSATOR			
B10	PRESSOSTATO LIVELLO BOILER BOILER PRESSURE SWITCH	PRESSOSTAT NIVEAU SURCHAUFFER NACHSPULBOILER NIVEAUSCHALTER			
B18	CONTROLLO LIVELLO BRILLANTANTE RINSE AID CONTROL LEVEL	CONTROLE NIVEAU PRODUIT DE RINCAGE STUFE GLANZMITTEL			
B12	CONTROLLO LIVELLO DETERGENTE DETERGENT LEVEL	CONTROLE NIVEAU DETERGENT SPULMITTELNIVEAUSCHALTER			
B16	PRESSOSTATO LIVELLO VASCA TANK PRESSURE SWITCH	PRESSOSTAT NIVEAU AIRGAP TANKDRUCKSCHALTER–NIVEAUREGLER			
A1/A2/A3	SCHEDA CONTROLLO ELECTRONIC CONTROL UNIT	FICHE DE CONTROLEELECTRONIQUE ELEKTRONISCHE BEDIENUNGSKARTE			
F5	FUSIBILE FUSE	FUSIBLE SICHERUNG			
SIMB.	DESCRIZIONE DESCRIPTION	DESCRIPTION BESCHREIBUNG			

WIRING DIAGRAMM

Dishwashers

	DESCRIZIONE	SOSTITUISCE	DATA
-3			
-2			

code Machine		denomination	Code
re-examined	date 05/04/18	WIRING DIAGRAMM	82178
inspected by	date	Dishwashers	n°/file 82187 mod --
validated by	date	total blat 5 / N° blat 1 / Next blat -2	

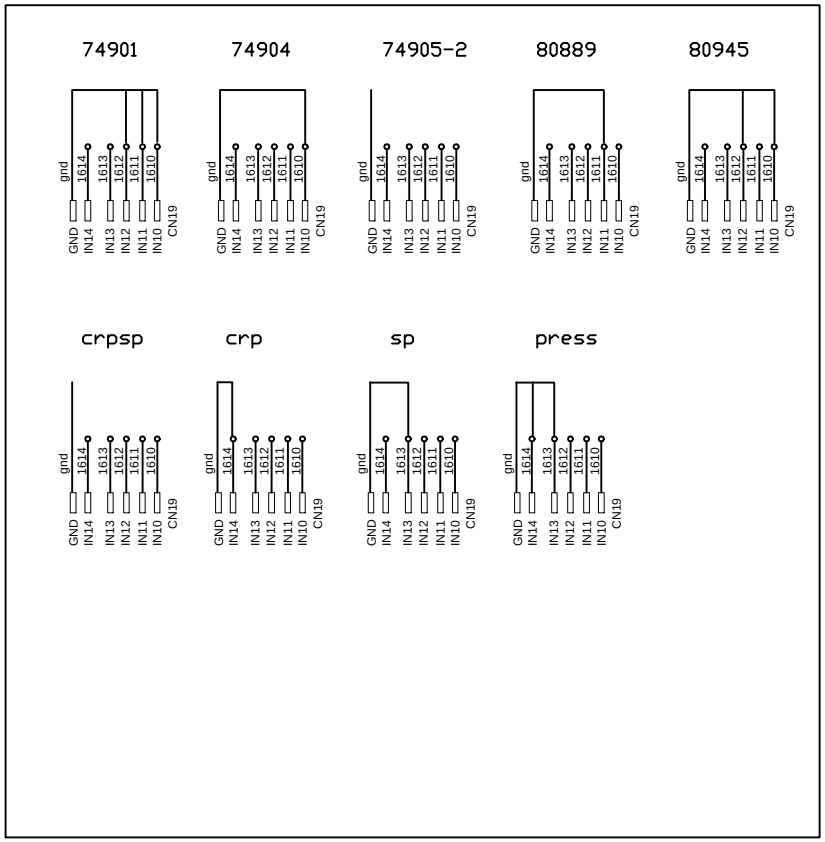

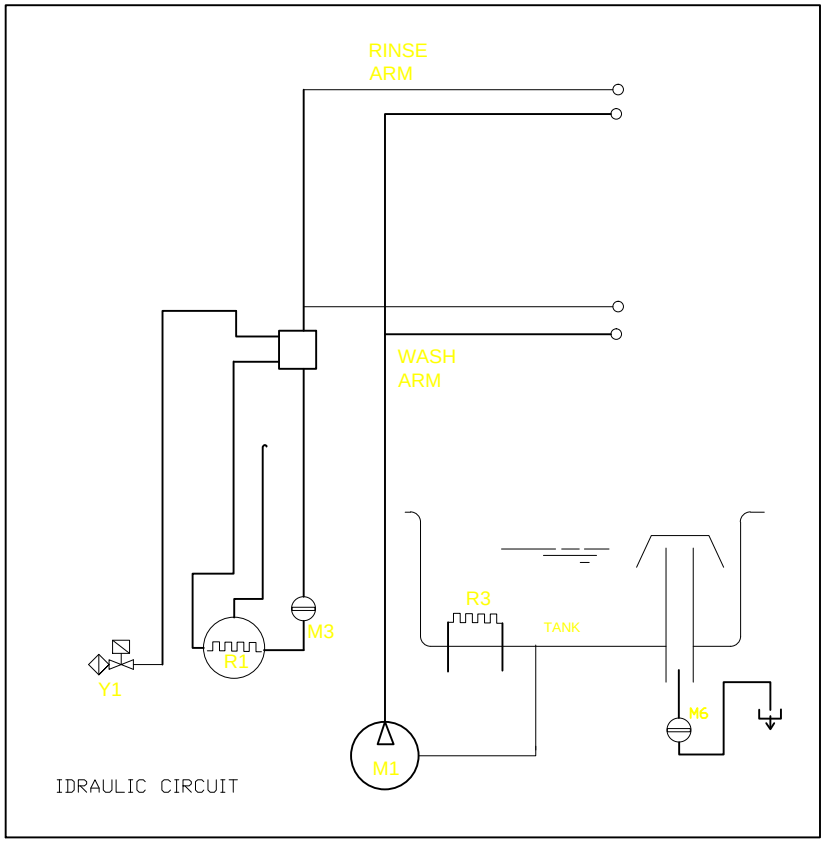

DESCRIZIONE	SOSTITUISCE	DATA

code Machine		denomination		Codice	
re-examined	date/date 05/04/18	WIRING DIAGRAMM		82178	
inspected by	data/date	Dishwashers		n°/file	mod
validated by	date/date	total blat 5	N° blat 4	Next blat 5	82187I — —

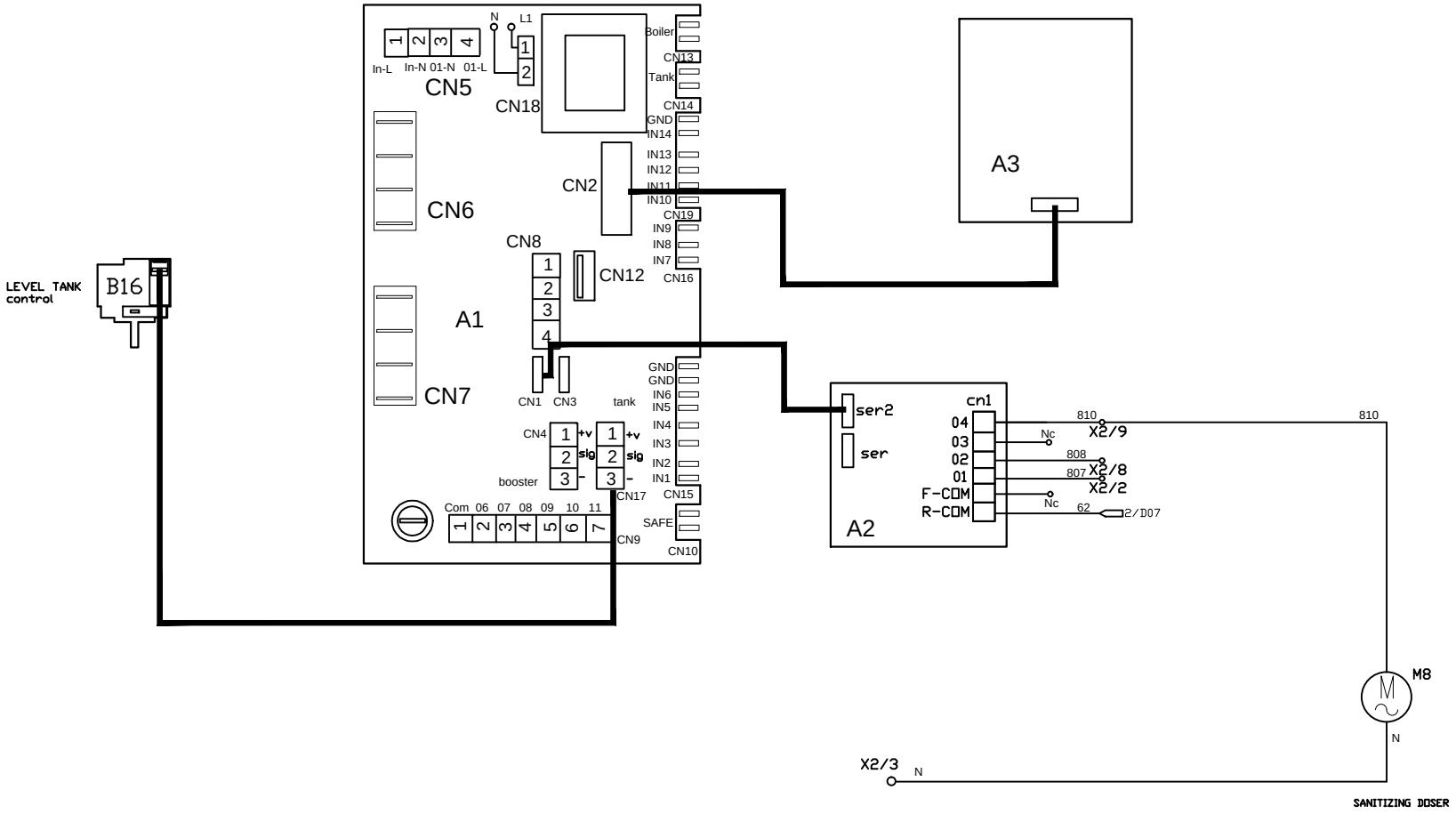

OPTIONAL

	DESCRIZIONE	SOSTITUISCE	DATA
-3			
-2			

code Machine		denomination	Codice
re-examined	data/date 05/04/18	WIRING DIAGRAMM	82178
inspected by	date	Dishwashers	n°/file 82187 mod --
validated by	date/date	total blat 5 / N° blat 5 / Next blat	