DESPIECE TECNICO

Elementos Neutros
Neutral Worktops
Elements Neutres
Neutralelemente
Element Neutri

GAMA 900

Modelos:

EN9-05C
EN9-10C
EN9-05
EN9-10

Marzo 2010 March

Fagor Industrial

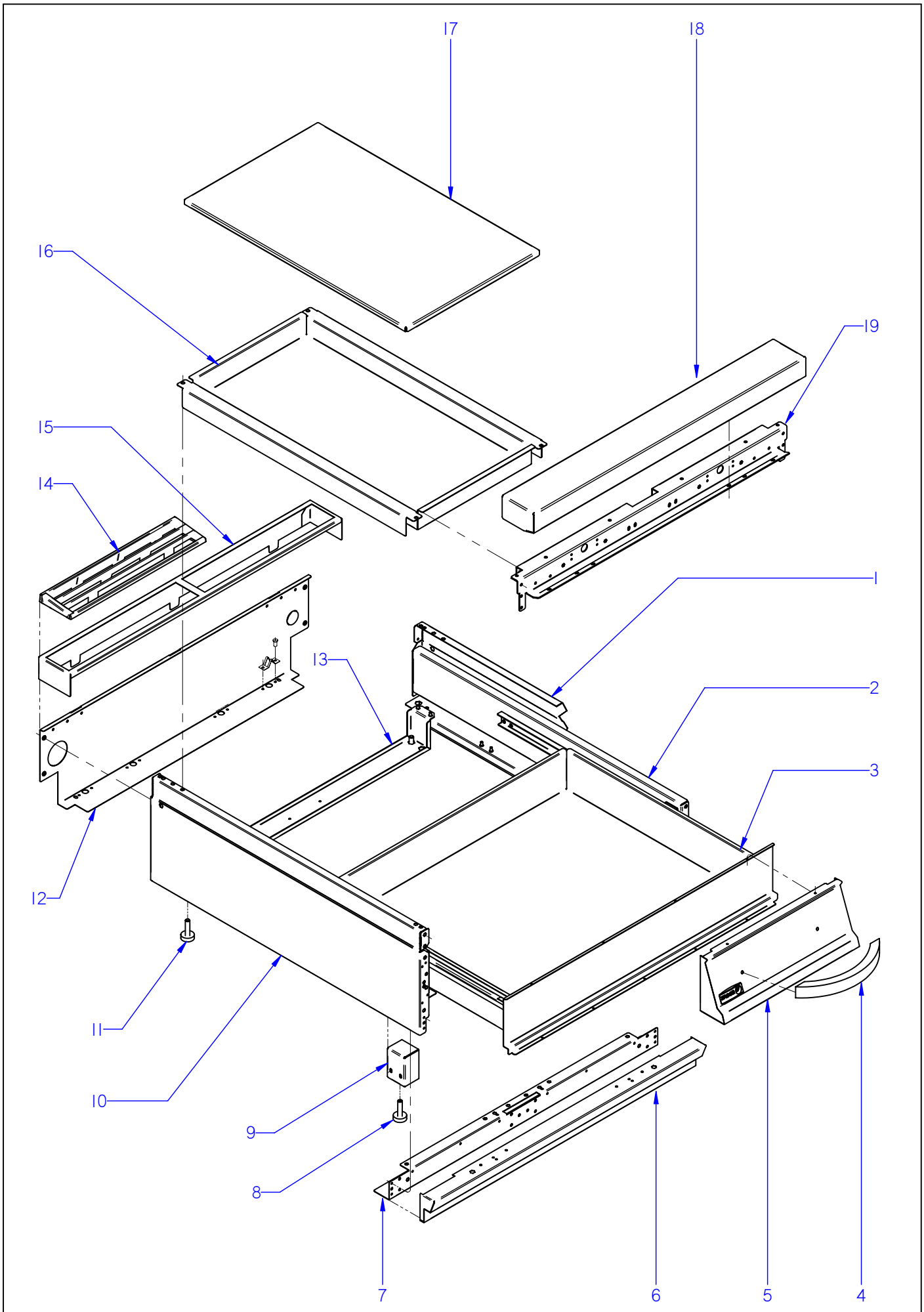

ITEM MARCADO EN COLOR = REPUESTO RECOMENDADO
COLOURED ITEM = RECOMMENDED SPARE PART

N plano	Firma	Fecha	Aparato	MUEBLE	Lamina	
C-2526		2010-03	ELEMENTO NEUTRO EN9-05C /10C		1	Fagor Industrial S.Coop. FAGOR Oñate

MOD.	ELEMENTO NEUTRO	ZONA	MUEBLE	PLANO	C-2526

ITEM	CODIGO	DENOMINACION	TEXTO	EN9-05C	EN9-10C						NOTAS
1	R062810000	PANEL LATERAL DERECHO	RIGHT SIDE PANEL	1	1						
	Q221342000	REMACHE EXAGONAL M5	HEXAGONAL RIVET M5	5	5						
	Q221345000	REMACHE EXAGONAL M10	HEXAGONAL RIVET M10	2	2						
	Q221343000	REMACHE EXAGONAL M6	HEXAGONAL RIVET M6	1	1						
	Q152004000	TORN. APLASTADO M5x13 A304	FLAT HEADED BOLT M5x13	1	1						
	Q419005000	REMACHE 4x8 ALMG3 / ALUMINIO	RIVET 4X8 ALMG3/ALUMINIUM	2	2						
2	R372652000	LATERAL INTER. DCHO. EN9-05 C	RIGHT INTERIOR SIDE EN9-05 C	1	1						
2	R372653000	LATERAL INTER. IZDO. EN9-05 C	LEFT INTERIOR SIDE EN9-05 C	1	1						
	Q419005000	REMACHE 4x8 ALMG3 / ALUMINIO	RIVET 4X8 ALMG3/ALUMINIUM	10	10						
	Q221342000	REMACHE EXAGONAL M5	HEXAGONAL RIVET M5	4	4						
3	R372654000	CAJON COMPLETO EN9-05C	COMPLETE DRAWER EN9-05C	1	_						
3	R372657000	CAJON COMPLETO EN9-10C	COMPLETE DRAWER EN9-10C	_	2						
4	R372811000	ASA CAJON COMPLETO	COMPLETE DRAWER HANDLE	1	2						
	Q412005000	REMACHE AVINOX Ø3,2x6mm	AVINOX RIVETØ3,2x6mm	5	9						
5	R372839000	PORTAMANDOS EN9-05C	CONTROL HOLDER EN9-05C	1	_						
5	R372843000	PORTAMANDOS EN9-10C	CONTROL HOLDER EN9-10C	_	2						
	U022836000	ESCUDO FAGOR	FAGOR EMBLEM G700	1	1						
	Q221023000	CLIP SUJECIÓN RÁPIDA Ø5	RAPID CONNECT CLIP Ø5	2	2						
6	R062805000	ZOCALO EN9-05	SKIRTING EN9-05	1	_						
6	H352817000	ZOCALO EN9-10	SKIRTING EN9-10	_	1						
	Q012031000	TORNILLO EXAGONAL M5x10 A304	HEXAGONAL BOLT M5x10 A304	2	2						
	Q302022000	ARANDELA 16x6x1,2 A304	WASHER 16x6x1.2 A304	2	2						
7	U652651000	LISTON AMARRE ZOCALO 1/2M	SKIRTING FASTEN. STRIP 1/2M	1	_						
7	H022604000	LISTON AMARRE ZOCALO 1M	SKIRTING FASTEN. STRIP 1M	_	1						
	Q221342000	REMACHE EXAGONAL M5	HEXAGONAL RIVET M5	4	6						
8	Z200107000	PATA REGULABLE	ADJUSTABLE LEG	2	2						
	Q221345000	REMACHE EXAGONAL M10	HEXAGONAL RIVET M10	2	2						

MOD.	ELEMENTO NEUTRO	ZONA	MUEBLE	PLANO	C-2526

ITEM	CODIGO	DENOMINACION	TEXTO	EN9-05C	EN9-10C						NOTAS
9	H012805000	ESCUADRA AMARRE PATA	LEG FASTENING BRACKET	2	2						
	X010503000	CIERRE MUELLE	LOCK SPRING	2	2						
	Q419007000	REMACHE TUBULAR C/V Ø3,2x6	TUBULAR RIVET C/V Ø3.2X6	4	4						
	Q162030000	TUERCA EXAGONAL M5	HEXAGONAL NUT M5	4	4						
	Q302022000	ARANDELA 16x6x1,2 A304	WASHER 16x6x1.2 A304	4	4						
10	R062811000	PANEL LATERA IZQUIERDO G-900	LEFT SIDE PANEL G-900	1	1						
	Q221342000	REMACHE EXAGONAL M5	HEXAGONAL RIVET M5	5	5						
	Q221345000	REMACHE EXAGONAL M10	HEXAGONAL RIVET M10	2	2						
	Q221343000	REMACHE EXAGONAL M6	HEXAGONAL RIVET M6	1	1						
	Q152004000	TORN. APLASTADO M5x13 A304	FLAT HEADED BOLT M5x13	1	1						
	Q419005000	REMACHE 4x8 ALMG3 / ALUMINIO	RIVET 4X8 ALMG3 / ALUMINIUM	2	2						
11	Z200107000	PATA REGULABLE	ADJUSTABLE LEG	2	2						
	Q221345000	REMACHE EXAGONAL M10	HEXAGONAL RIVET M10	2	2						
12	H012824000	PANEL POSTERIOR 1/2M	REAR PANEL 1/2M	1	_						
12	H022809000	PANEL POSTERIOR 1M	REAR PANEL 1M	_	1						
	Q419005000	REMACHE 4x8 ALMG3 / ALUMINIO	RIVET 4X8 ALMG3 ALUMINIUM	4	4						
	X010503000	CIERRE MUELLE	LOCK SPRING	1	2						
	Q419007000	REMACHE TUBULAR C/V Ø 3,2x6	TUBULAR RIVET C/V Ø3.2X6	2	4						
13	H012606000	REFUERZO POSTERI. PATAS 1/2M	LEG BACK REINFORCEM.1/2M	1	_						
13	H022606000	REFUERZO POSTERIOR PATAS 1M	LEG BACK REINFORCEM.1M	_	1						
	Q162030000	TUERCA EXAGONAL M5	HEXAGONAL NUT M5	4	4						
	Q302022000	ARANDELA 16x6x1,2 A304	WASHER 16X6X1.2 A.304	4	4						
	Q221345000	REMACHE EXAGONAL M10	HEXAGONAL RIVET M10	2	2						
14	R205425000	EMBELLECEDOR ESMALTE	ENAMEL TRIM	1	2						
15	R205438000	SOPORTE EMBELLECEDOR 1/2M	1/2M TRIM SUPPORT	1	_						
15	R205439000	SOPORTE EMBELLECEDOR 1M	TRIM SUPPORT 1M	_	1						
	Q419005000	REMACHE 4X8 ALMG3 / ALUMINIO	RIVET 4X8 ALMG3 / ALUMINI.	2	2						
16	R376101000	CUBA EN9-05	TUB EN9-05	1	_						
16	R396101000	CUBA EN9-10	TUB EN9-10	_	1						
	Q012031000	TORNILLO EXAGONAL M5x10 A304	HEXAGONAL BOLT M5x10	6	6						

MOD.	ELEMENTO NEUTRO	ZONA	MUEBLE	PLANO	C-2526

ITEM	CODIGO	DENOMINACION	TEXTO	EN9-05C	EN9-10C						NOTAS
17	R375420000	MESA COMPLETA EN9-05	COMPLETE TABLE EN9-05	1	_						
17	R395420000	MESA COMPLETA EN9-10	COMPLETE TABLE EN9-10	_	1						
18	R045416000	ANTERIOR DE MESA 1/2 M	FRONT BENCH 1/2 M	1	_						
18	S105402000	ANTERIOR DE MESA 1 M	FRONT BENCH 1 M	_	1						
	Q042032000	TORNILLO AVELLLANADO M5X15	COUNTERSUNK BOLT M5x15	1	2						
19	X162690000	ESCUA INTER AMAR ANTE 0,5 M	BRACKET INTER FASTE. FRONT	1	_						
19	U022632000	ESCUA INTER AMAR ANTE 1 M	BRACKET INTER FASTE. FRONT	_	1						
	Q012032000	TORNILLO EXAGONAL M5x15 A304	HEXAGONAL BOLT M5x10 A304	6	6						
	Q221342000	REMACHE EXAGONAL M5	HEXAGONAL RIVET M5	3	3						

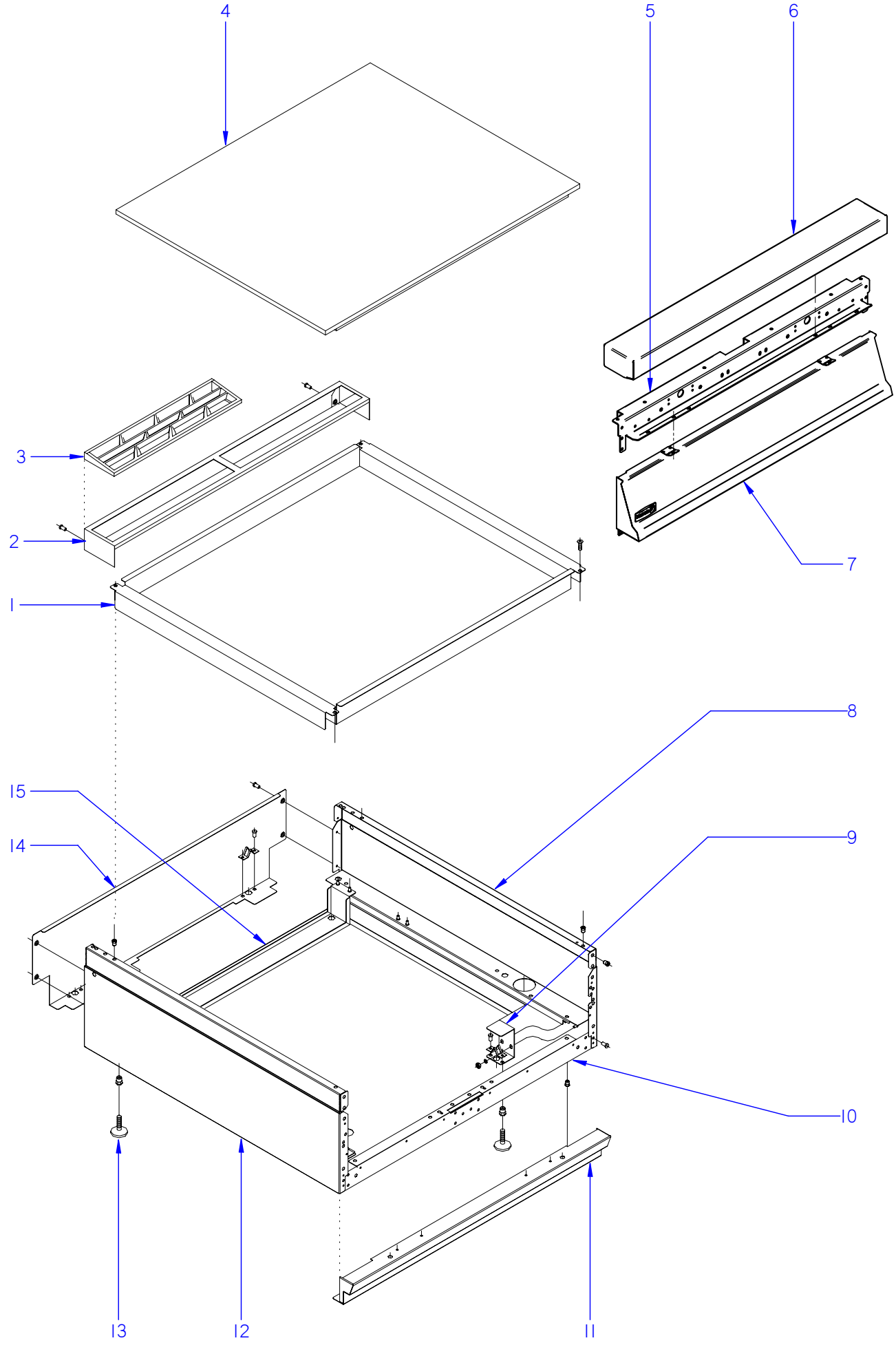

ITEM MARCADO EN COLOR = REPUESTO RECOMENDADO
COLOURED ITEM = RECOMMENDED SPARE PART

N plano	Firma	Fecha	Aparato	MUEBLE	Lamina	
C-2527		2010-03	ELEMENTO NEUTRO EN9-05 / 10		2	Fagor Industrial S.Coop. FAGOR Oñate

MOD.	ELEMENTO NEUTRO	ZONA	MUEBLE	PLANO	C-2527

ITEM	CODIGO	DENOMINACION	TEXTO	EN9-05	EN9-10						NOTAS
1	R376101000	CUBA EN9-05	TUB EN9-05	1	_						
1	R396101000	CUBA EN9-10	TUB EN9-10	_	1						
	Q012031000	TORNILLO EXAGONAL M5x10 A304	HEXAGONAL BOLT M5x10	6	6						
2	R205438000	SOPORTE EMBELLECEDOR 1/2M	1/2M TRIM SUPPORT	1	_						
2	R205439000	SOPORTE EMBELLECEDOR 1M	TRIM SUPPORT 1M	_	1						
3	R205425000	EMBELLECEDOR ESMALTE	ENAMEL TRIM	1	2						
4	R375420000	MESA COMPLETA EN9-05	COMPLETE TABLE EN9-05	1	_						
4	R395420000	MESA COMPLETA EN9-10	COMPLETE TABLE EN9-10	_	1						
5	X162690000	ESCUA INTER AMAR ANTE 0,5 M	BRACKET INTER FASTE. FRONT	1	_						
5	U022632000	ESCUA INTER AMAR ANTE 1 M	BRACKET INTER FASTE. FRONT	_	1						
	Q012032000	TORNILLO EXAGONAL M5x15 A304	HEXAGONAL BOLT M5x10 A304	6	6						
	Q221342000	REMACHE EXAGONAL M5	HEXAGONAL RIVET M5	3	3						
6	R045416000	ANTERIOR DE MESA 1/2 M	FRONT BENCH 1/2 M	1	_						
6	S105402000	ANTERIOR DE MESA 1 M	FRONT BENCH 1 M	_	1						
	Q152004000	TORN. APLASTADO M5x13 A304	FLAT HEADED BOLT M5x13	2	2						
	Q302022000	ARANDELA 16x6x1,2 A304	WASHER 16x6x1.2 A304	2	2						
7	R372837000	PORTAMANDOS EN9-05	CONTROL HOLDER EN9-05	1	_						
7	S222812000	PORTAMANDOS EN9-10	CONTROL HOLDER EN9-10	_	1						
	Q151336000	TORNILLO SOPORTE GUIAS	GUIDE SUPPORT BOLT	2	2						
	Q302022000	ARANDELA 16x6x1,2 A304	WASHER 16x6x1.2 A304	4	4						
	Q162040000	TUERCA EXAGONAL M6	HEXAGONAL NUT M6	2	2						
	U022836000	ESCUDO FAGOR	FAGOR EMBLEM G700	1	1						
	Q221023000	CLIP SUJECIÓN RÁPIDA Ø5	RAPID CONNECT CLIP Ø5	2	2						
8	R062810000	PANEL LATERAL DERECHO	RIGHT SIDE PANEL	1	1						
	Q221342000	REMACHE EXAGONAL M5	HEXAGONAL RIVET M5	5	5						
	Q221345000	REMACHE EXAGONAL M10	HEXAGONAL RIVET M10	2	2						
	Q221343000	REMACHE EXAGONAL M6	HEXAGONAL RIVET M6	1	1						
	Q152004000	TORN. APLASTADO M5x13 A304	FLAT HEADED BOLT M5x13	1	1						
	Q419005000	REMACHE 4x8 ALMG3 / ALUMINIO	RIVET 4X8 ALMG3/ALUMINIUM	2	2						

MOD.	ELEMENTO NEUTRO		ZONA	MUEBLE					PLANO	C-2527	

ITEM	CODIGO	DENOMINACION	TEXTO	EN9-05	EN9-10						NOTAS
9	H012805000	ESCUADRA AMARRE PATA	LEG FASTENING BRACKET	2	2						
	Q162030000	TUERCA EXAGONAL M5	HEXAGONAL NUT M5	4	4						
	X010503000	CIERRE MUELLE	LOCK SPRING	2	2						
	Q419007000	REMACHE TUBULAR C/V Ø 3,2x6	TUBULAR RIVET C/V Ø3.2X6	2	2						
10	U652651000	LISTON AMARRE ZOCALO 1/2M	SKIRTING FASTEN. STRIP 1/2M	1	_						
10	H022604000	LISTON AMARRE ZOCALO 1M	SKIRTING FASTEN. STRIP 1M	_	1						
	Q221342000	REMACHE EXAGONAL M5	HEXAGONAL RIVET M5	2	2						
11	R062805000	ZOCALO COMPLETO 1/2 M	COMPLETE SKIRTING 1/2 M	1	_						
11	H352817000	ZOCALO COMPLETO 1 M	COMPLETE SKIRTING 1 M	_	1						
	Q419005000	REMACHE 4x8 ALMG3 / ALUMINIO	RIVET 4X8 ALMG3 / ALUMINIUM	4	8						
	Q152004000	TORN. APLASTADO M5x13 A304	FLAT HEADED BOLT M5x13	2	2						
12	R062811000	PANEL LATERA IZQUIERDO G-900	LEFT SIDE PANEL G-900	1	1						
	Q221342000	REMACHE EXAGONAL M5	HEXAGONAL RIVET M5	5	5						
	Q221345000	REMACHE EXAGONAL M10	HEXAGONAL RIVET M10	2	2						
	Q221343000	REMACHE EXAGONAL M6	HEXAGONAL RIVET M6	1	1						
	Q152004000	TORN. APLASTADO M5x13 A304	FLAT HEADED BOLT M5x13	1	1						
	Q419005000	REMACHE 4x8 ALMG3 / ALUMINIO	RIVET 4X8 ALMG3 / ALUMINIUM	2	2						
13	Z200107000	PATA REGULABLE	ADJUSTABLE LEG	4	4						
14	H012824000	PANEL POSTERIOR 1/2M	REAR PANEL 1/2M	1	_						
14	H022809000	PANEL POSTERIOR 1M	REAR PANEL 1M	_	1						
	Q419005000	REMACHE 4x8 ALMG3 / ALUMINIO	RIVET 4X8 ALMG3 / ALUMINIUM	4	4						
	X010503000	CIERRE MUELLE	LOCK SPRING	1	2						
	Q419007000	REMACHE TUBULAR C/V Ø 3,2x6	TUBULAR RIVET C/V Ø3.2X6	2	4						
15	H012606000	REFUERZO POSTER. PATAS 1/2M	LEG BACK REINFORCEM.1/2M	1	_						
15	H022606000	REFUERZO POSTERIOR PATAS IM	LEG BACK REINFORCEM.1M	_	1						
	Q162030000	TUERCA EXAGONAL M5	HEXAGONAL NUT M5	4	4						
	Q302022000	ARANDELA 16x6x1,2 A304	WASHER 16x6x1.2 A304	4	4						
	Q221345000	REMACHE EXAGONAL M10	HEXAGONAL RIVET M10	2	2						