Mod./Type: **_70/... PCE... - CFE... EXTREME**

_90/... PCE... - CFE... SIMPLE / EXTREME

cod./num. 2531802.00

data/date: 02/08/2014

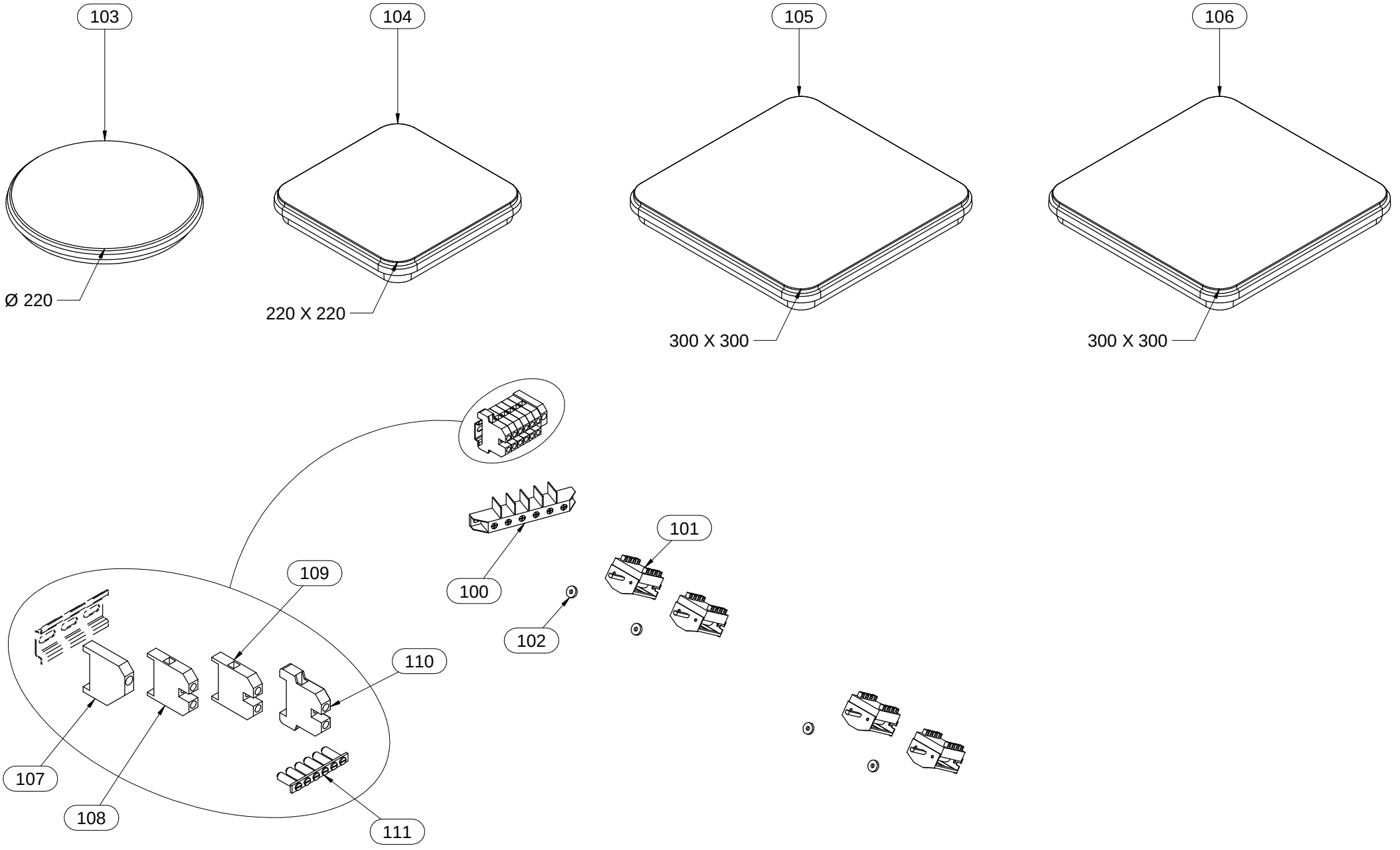

Mod./Type: **_70/... CFE...**
EXTREME

cod./num. 2531804.00
data/date: 04/08/2014

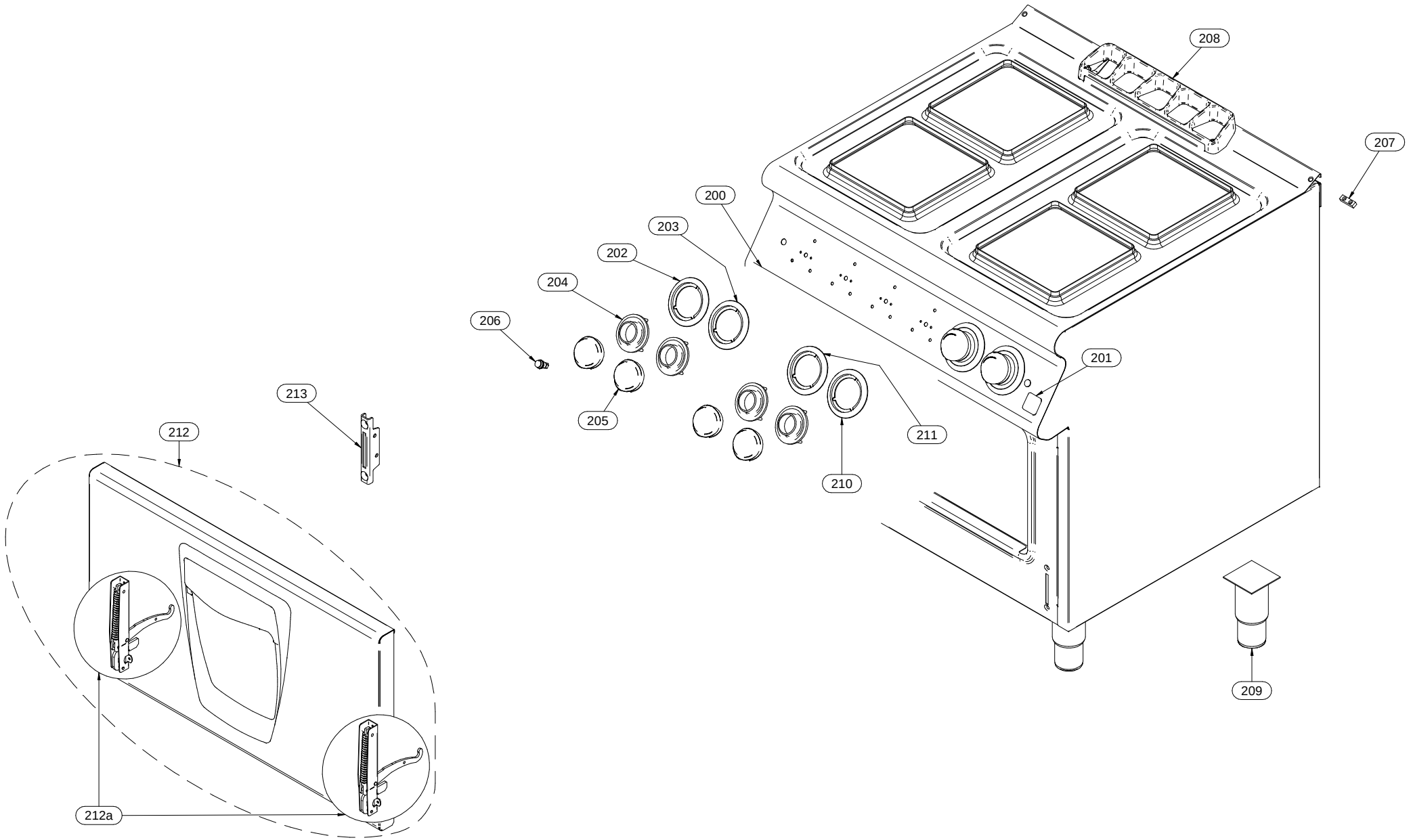

Mod./Type: **_70/... ...F...E... - _90/... ...F...E...**

ELECTRIC OVEN

cod./num. 2531630.00

data/date: 06/06/2014

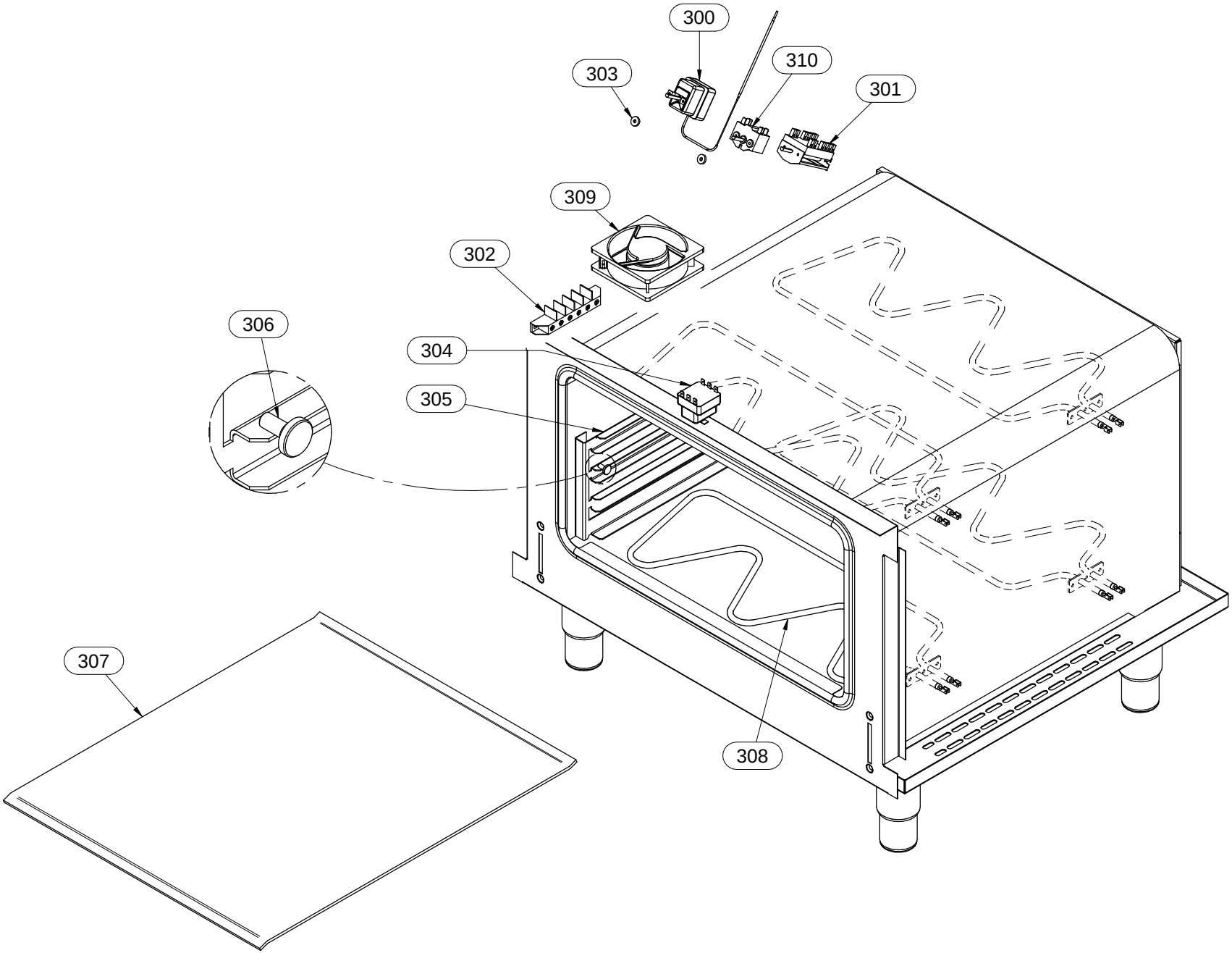

Mod.:	_70/... PCE... - CFE... EXTREME _90/... PCE... - CFE... SIMPLE / EXTREME			cod. / num. 2531803.00 data / date 24/04/2014 rif. / ref. 2531802.00		_70/40 PCE...	_70/80 PCE... - _70/80 CFE	_70/120 PCE...	_70/80 CFE2	_70/40 PCEQ...	_70/80 PCEQ... - _70/80 CFEQ	_70/120 PCEQ...	_70/80 CFEQ2	_90/40 PCES...	_90/80 PCES... - _90/80 CFES	_90/120 PCES...	_90/80 PCES2... - _90/80 CFES2	_90/40 PCE...	_90/80 PCE... - _90/80 CFE...	_90/120 PCE...	_90/80 PCE2... - _90/80 CFE2	NOTE
POS.	DESCRIZIONE	DESCRIPTION	DENOMINATION	BENENNUNG	COD.	Q.ty																
100	MORSETTIERA	TERMINAL BOARD	BORNES	KLEMMENBRETT	M566050500	1	1	-	-	1	1	-	-	1	1	-	-	1	1	-	-	
101	COMMUTATORE	CHANGE-OVER SWITCH	COMMUTATEUR	UMSCHALTER	661.002.00	2	4	6	4	2	4	6	4	2	4	6	4					
					961.000.00													2	4	6	4	
102	GUARNIZIONE	WASHER	GUARNITURE	DICHTUNGSRING	953.020.00	2	4	6	4	2	4	6	4	2	4	6	4	2	4	6	4	
103	PIASTRA ELETTRICA Ø 220	ELECTRIC PLATE Ø 220	PLAQUE ELECTRIQUE Ø 220	ELEKTROKOCHPLATTE Ø 220	665.006.00	2	4	6	4	-	-	-	-	-	-	-	-	-	-	-	-	
104	PIASTRA ELETTRICA 220 X 220	ELECTRIC PLATE 220 X 220	PLAQUE ELECTRIQUE 220 X 220	ELEKTROKOCHPLATTE 220 X 220	665.039.00	-	-	-	-	2	4	6	4	-	-	-	-	-	-	-	-	
105	PIASTRA ELETTRICA 3,5kW	ELECTRIC PLATE 3,5kW	PLAQUE ELECTRIQUE 3,5kW	ELEKTROKOCHPLATTE 3,5kW	965.063.00	-	-	-	-	-	-	-	-	2	4	6	4	-	-	-	-	
106	PIASTRA ELETTRICA 4kW	ELECTRIC PLATE 4kW	PLAQUE ELECTRIQUE 4kW	ELEKTROKOCHPLATTE 4kW	965.004.00	-	-	-	-	-	-	-	-	-	-	-	-	2	4	6	4	
107	BLOCCAMORSETTI	TERMINAL STOPPER	BORNE BLOQUANT	BLÖCK-KLEMME	663.059.00	-	-	1	1	-	-	1	1	-	-	1	1	-	-	1	1	
108	MORSETTO	TERMINAL	BORNE	KLEMME	663.061.00	-	-	3	6	-	-	3	6	-	-	3	6	-	-	3	6	
109	MORSETTO BLU	BLUE TERMINAL	BORNE BLUE	NULL-KLEMME	663.076.00	-	-	3	-	-	-	3	-	-	-	3	-	-	-	3	-	
110	MORSETTO TERRA - PE	PE-TERMINAL	BORNE PE	ERD-KLEMME	663.060.00	-	-	1	1	-	-	1	1	-	-	1	1	-	-	1	1	
111	BARRETTE COLLEGAMENTO	CONNECTOR PIN	BARRETTE DE CONNECTION	VERBINDUNG-STAB	663.056.00	-	-	1	1	-	-	1	1	-	-	1	1	-	-	1	1	
112																						
113																						
114																						
115																						
116																						
117																						
118																						
119																						
120																						
121																						
122																						
123																						
124																						
125																						
126																						
127																						
128																						
129																						
130																						
131																						
132																						
133																						
134																						
135																						
136																						
137																						
138																						
139																						
140																						
141																						
142																						
143																						
144																						
145																						
146																						
147																						
148																						

Mod.:	_70/... CFE... - _70/... CFEQ... EXTREME			cod. / num. 2531805.00 data / date 04/08/2014 rif. / ref. 2531804.00		EM70/80 CFE	EM70/80 CFE2	EM70/80 CFEQ	EM70/80 CFEQ2	NOTE	
POS.	DESCRIZIONE	DESCRIPTION	DENOMINATION	BENENNUNG	COD.	Q. ty					
200	CRUSCOTTO	CONTROL PANEL	BANDEAU	BEDIENBLENDE	9111302.00	1	1	1	1		
201	MARCHIO	BRAND NAME	MARQUE	MARKENZEICHEN	982.021.00	1	1	1	1	**FROM: 15.12.2011**	**TO: 31.01.2014**
					982.023.00	1	1	1	1	**FROM: 01.02.2014**	**TO:...**
202	SERIGRAFIA	SCREEN PRINT	SÉRIGRAPHIE	SIEBDRUCK	910.167.00	2	2	2	2		
203	SERIGRAFIA	SCREEN PRINT	SÉRIGRAPHIE	SIEBDRUCK	910.168.00	2	2	2	2		
204	LABIRINTO	LABYRINTH	LABYRINTHE	LABYRINTH	256.235.00	6	6	6	6		
205	MANOPOLA	KNOB	BOUTON	DREHKNOPF	256.234.00	6	6	6	6		
206	LAMPADA SPIA ARANCIO	ORANGE INDICATOR LIGHT	LAMPE TEMOIN ORANGE	ORANGE KONTROLLAMPE	963.013.00	2	2	2	2		
207	PIASTRINA GIUNZIONE	FIXING PLATE	PLAQUETTE FIXAGE	BEFESTIGUNGSPLATTE	941.130.00	1	1	1	1		
208	GRIGLIA CAMINO	FLUE GRIDDLE	GRILLE POUR CHEMINÉE	KAMINROST	982.012.00	1	1	1	1		
209	PIEDINO	FOOT	PIED	STELLFUSS	912.090.00	4	4	4	4	**FROM: 15.12.2011**	**TO: 17.05.2013**
					912.090.14	4	4	4	4	**FROM: 18.05.2013**	**TO:...**
210	SERIGRAFIA	SCREEN PRINT	SÉRIGRAPHIE	SIEBDRUCK	910.193.00	1	1	1	1		
211	SERIGRAFIA TERMOSTATO	THERMOSTAT SCREEN PRINT	SÉRIGRAPHIE THERMOSTAT	SIEBDRUCK DES THERMOSTAT	910.175.00	1	1	1	1		
212	PORTA	DOOR	PORTE	TÜR	910.297.00	1	1	1	1		
212a	CERNIERA	JOINT	CHARNIERE	SCHARNIER	684.030.00	2	2	2	2		
213	PORTARULLINO	ROLL HOLDER	PORTE-AIGUILLE DE ROULEMENT	ROLLE-TRÄGER	684.011.00	2	2	2	2		
214											
215											
216											
217											
218											
219											
220											
221											
222											
223											
224											
225											
226											
227											
228											
229											
230											
231											
232											
233											

Mod.:	_70/… …F…E… - _90/… …F…E… ELECTRIC OVEN			cod. / num. 2531631.00 data / date 02/05/2014 rif. / ref. 2531630.00		_70/……FGE…	_70/……FE…	_70/… TPFE…	_90/……FGE…	_90/160 …FGE…	_90/……FE…	_90/… TPFE…	NOTE
POS.	DESCRIZIONE	DESCRIPTION	DENOMINATION	BENENNUNG	COD.	Q. ty							
300	TERMOSTATO	THERMOSTAT	THERMOSTAT	THERMOSTAT	661.114.00	1	1	1	1	2	1	1	
301	COMMUTATORE FORNO	OVEN CHANGE-OVER SWITCH	COMMUTATEUR FOUR	UMSCHALTER BACKOFEN	661.113.00	1	1	1	1	2	1	1	
302	MORSETTIERA	TERMINAL BOARD	BORNES	KLEMMENBRETT	M566050500	1	-	-	1	1	-	-	
303	GUARNIZIONE	WASHER	GUARNITURE	DICHTUNGSRING	953.020.00	2	2	2	2	4	2	2	
304	TERMOSTATO SICUREZZA	SAFETY THERMOSTAT	THERMOSTAT DE SECURITE	TEMPERATURBEGRENZER	661.115.00	1	1	1	1	2	1	1	
305	REGGIGRIGLIA	TRAY RACK	PORTE-PLAQUES	EINHÄNGEGESTELL	622.967.00	2	2	2	2	4	2	2	
306	FISSAGGIO REGGIGRIGLIA	TRAY RACK FIXING	FIXAGE PORTE-PLAQUES	BEFESTIGUNG DES EINHÄNGEGESTELLS	641.090.00	4	4	4	4	8	4	4	
307	SUOLA FORNO	INNER OVEN SOLE	SOLE DU FOUR	OFENINNENBODEN	635.029.00	1	1	1	1	2	1	1	
308	RESISTENZA FORNO	OVEN HEATING ELEMENT	RESISTANCE DU FOUR	BACKOFEN HEINZELEMENT	965.060.00	4	4	4	4	8	4	4	
309	VENTOLA	FAN	VENTILATEUR	LÜFTERRAD	764.055.00	-	-	1	-	-	-	1	
310	COMMUTATORE	CHANGE-OVER SWITCH	COMMUTATEUR	UMSCHALTER	661.093.00	-	-	1	-	-	-	1	
311													
312													
313													
314													
315													
316													
317													
318													
319													
320													
321													
322													
323													
324													
325													
326													
327													
328													
329													
330													
331													
332													
333													
334													
335													
336													
337													
338													
339													
340													