DESPIECE TECNICO

Elementos neutros
Neutral elements
Éléments neutres
Neutrale elemente
Elementi neutri
Elementos neutros

GAMA 900

Modelos:

EN9-05 AD
EN9-10 AD
EN9-05C AD
EN9-10C AD

Noviembre 2011 November

FAGOR

FAGOR INDUSTRIAL

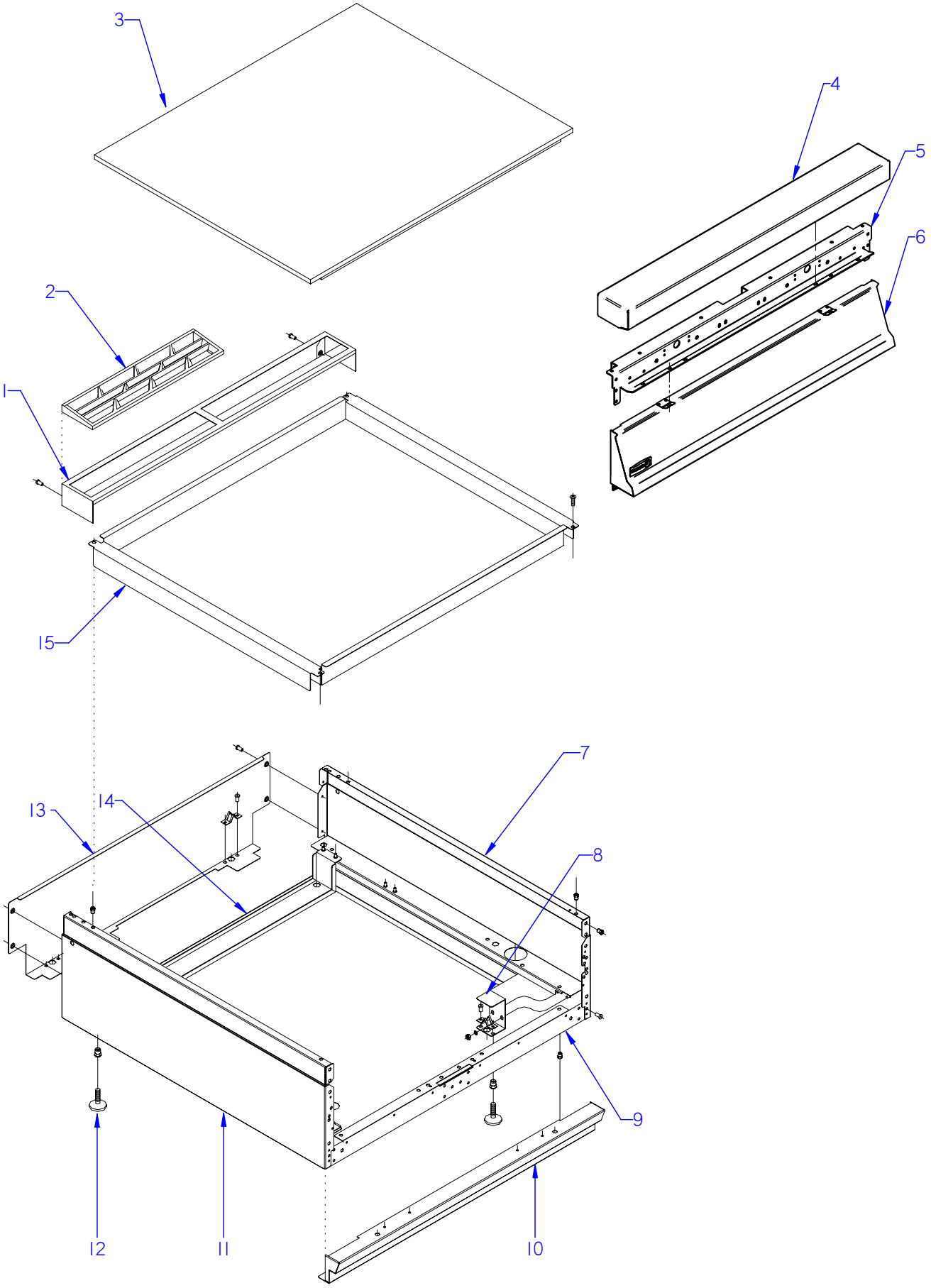

ITEM MARCADO EN COLOR = REPUESTO RECOMENDADO
COLOURED ITEM = RECOMMENDED SPARE PART

Nº plano / N º plane	Firma	Fecha / Date	Denominación / Denomination: MUEBLE / FITTING	Lamina / Sheet	
C-2934		2011-10	ELEMENTO NEUTRO EN9-05 / 10 AD	1	Fagor Industrial S.Coop. FAGOR Oñate

MOD.	ELEMENTO NEUTRO NEUTRAL ELEMENTS	ZONA / ZONE	MUEBLE / FITTING	PLANO DIAGRAM	C-2934

ITEM	CODIGO REFERENCE	DENOMINACION	DENOMINATION	EN9-05 AD	EN9-10 AD							ELIMINADO ELIMINATED	INTRODUCID. INTRODUCED	NOTAS
1	R205438000	SOPORTE EMBELLECEDOR 1/2M	1/2M TRIM SUPPORT	1	_									
1	R205439000	SOPORTE EMBELLECEDOR 1M	TRIM SUPPORT 1M	_	1									
2	R205425000	EMBELLECEDOR ESMALTE	ENAMEL TRIM	1	2									
3	R375427000	MESA COMPLETA EN9-05 AD	COMPLETE TABLE EN9-05 AD	1	_									
3	R395425000	MESA COMPLETA EN9-10 AD	COMPLETE TABLE EN9-10 AD	_	1									
4	U965415000	ANTERIOR MESA 0,5 M AD	BENCH FRONT 0.5 M AD	1	_									
4	S105403000	ANTERIOR MESA 1 M AD	BENCH FRONT 1 M AD	_	1									
	Q152004000	TORN. APLASTADO M5x13 A304	FLAT HEADED BOLT M5x13	2	2									
	Q302022000	ARANDELA 16x6x1,2 A304	WASHER 16x6x1.2 A304	2	2									
5	R042611000	ESCUA INTER AMAR ANTE 0,5 M	BRACKET INTER FASTE. FRONT	1	_									
5	U042610000	ESCUA INTER AMAR ANTE 1 M	BRACKET INTER FASTE. FRONT	_	1									
	Q012032000	TORNILLO EXAGONAL M5x15 A304	HEXAGONAL BOLT M5x10 A304	6	6									
	Q221342000	REMACHE EXAGONAL M5	HEXAGONAL RIVET M5	3	3									
6	R372837000	PORTAMANDOS EN9-05	CONTROL HOLDER EN9-05	1	_									
6	S222812000	PORTAMANDOS EN9-10	CONTROL HOLDER EN9-10	_	1									
	Q151336000	TORNILLO SOPORTE GUIAS	GUIDE SUPPORT BOLT	2	2									
	Q302022000	ARANDELA 16x6x1,2 A304	WASHER 16x6x1.2 A304	4	4									
	Q162040000	TUERCA EXAGONAL M6	HEXAGONAL NUT M6	2	2									
	U022836000	ESCUDO FAGOR	FAGOR EMBLEM G700	1	1									
	Q221023000	CLIP SUJECIÓN RÁPIDA Ø5	RAPID CONNECT CLIP Ø5	2	2									
7	R062810000	PANEL LATERAL DERECHO	RIGHT SIDE PANEL	1	1									
	Q221342000	REMACHE EXAGONAL M5	HEXAGONAL RIVET M5	5	5									
	Q221345000	REMACHE EXAGONAL M10	HEXAGONAL RIVET M10	2	2									
	Q221343000	REMACHE EXAGONAL M6	HEXAGONAL RIVET M6	1	1									
	Q152004000	TORN. APLASTADO M5x13 A304	FLAT HEADED BOLT M5x13	1	1									
	Q419005000	REMACHE 4x8 ALMG3 / ALUMINIO	RIVET 4X8 ALMG3/ALUMINIUM	2	2									
8	U962627000	ESCUADRA AMARRE PATA AD	LEG FASTENING BRACKET AD	2	2									
	X010503000	CIERRE MUELLE	LOCK SPRING	2	2									
	Q419007000	REMACHE TUBULAR C/V Ø3,2x6	TUBULAR RIVET C/V Ø3.2X6	4	4									
	Q162030000	TUERCA EXAGONAL M5	HEXAGONAL NUT M5	4	4									
	Q302022000	ARANDELA 16x6x1,2 A304	WASHER 16x6x1.2 A304	4	4									

MOD.	ELEMENTO NEUTRO NEUTRAL ELEMENTS	ZONA / ZONE	MUEBLE / FITTING	PLANO DIAGRAM	C-2934

ITEM	CODIGO REFERENCE	DENOMINACION	DENOMINATION	EN9-05 AD	EN9-10 AD							ELIMINADO ELIMINATED	INTRODUCID. INTRODUCED	NOTAS
9	U962645000	LISTON AMARRE ZOCALO 1/2M AD	SKIRTING FASTE. STRIP 1/2M AD	1	_									
9	U962625000	LISTON AMARRE ZOCALO 1 M AD	SKIRTING FASTE. STRIP 1 M AD	_	1									
	Q221342000	REMACHE EXAGONAL M5	HEXAGONAL RIVET M5	4	6									
10	R062805000	ZOCALO COMPLETO 1/2 M	COMPLETE SKIRTING 1/2 M	1	_									
10	H352817000	ZOCALO COMPLETO 1 M	COMPLETE SKIRTING 1 M	_	1									
	Q419005000	REMACHE 4x8 ALMG3 / ALUMINIO	RIVET 4X8 ALMG3 / ALUMINIUM	4	8									
	Q152004000	TORN. APLASTADO M5x13 A304	FLAT HEADED BOLT M5x13	2	2									
11	R062811000	PANEL LATERA IZQUIERDO G-900	LEFT SIDE PANEL G-900	1	1									
	Q221342000	REMACHE EXAGONAL M5	HEXAGONAL RIVET M5	5	5									
	Q221345000	REMACHE EXAGONAL M10	HEXAGONAL RIVET M10	2	2									
	Q221343000	REMACHE EXAGONAL M6	HEXAGONAL RIVET M6	1	1									
	Q152004000	TORN. APLASTADO M5x13 A304	FLAT HEADED BOLT M5x13	1	1									
	Q419005000	REMACHE 4x8 ALMG3 / ALUMINIO	RIVET 4X8 ALMG3 / ALUMINIUM	2	2									
12	Z200107000	PATA REGULABLE	ADJUSTABLE LEG	4	4									
13	R042838000	PANEL POSTERIOR 0,5 M	REAR PANEL 0.5 M	1	_									
13	U042805000	PANEL POSTERIOR 1 M	REAR PANEL 1 M	_	1									
	Q419005000	REMACHE 4x8 ALMG3 / ALUMINIO	RIVET 4X8 ALMG3 / ALUMINIUM	4	4									
	X010503000	CIERRE MUELLE	LOCK SPRING	1	2									
	Q419007000	REMACHE TUBULAR C/V Ø 3,2x6	TUBULAR RIVET C/V Ø3.2X6	2	4									
14	U042604000	REFUERZO POSTE. PATAS 1/2M AD	LEG BACK REINFORCE.1/2M AD	1	_									
14	U042611000	REFUERZO POSTE. PATAS 1 M AD	LEG BACK REINFORCE.1 M AD	_	1									
	Q162030000	TUERCA EXAGONAL M5	HEXAGONAL NUT M5	4	4									
	Q302022000	ARANDELA 16x6x1,2 A304	WASHER 16X6X1.2 A.304	4	4									
	Q221345000	REMACHE EXAGONAL M10	HEXAGONAL RIVET M10	2	2									
15	R376102000	CUBA EN9-05 AD	TUB EN9-05 AD	1	_									
15	R396102000	CUBA EN9-10 AD	TUB EN9-10 AD	_	1									
	Q012031000	TORNILLO EXAGONAL M5x10 A304	HEXAGONAL BOLT M5x10	6	6									

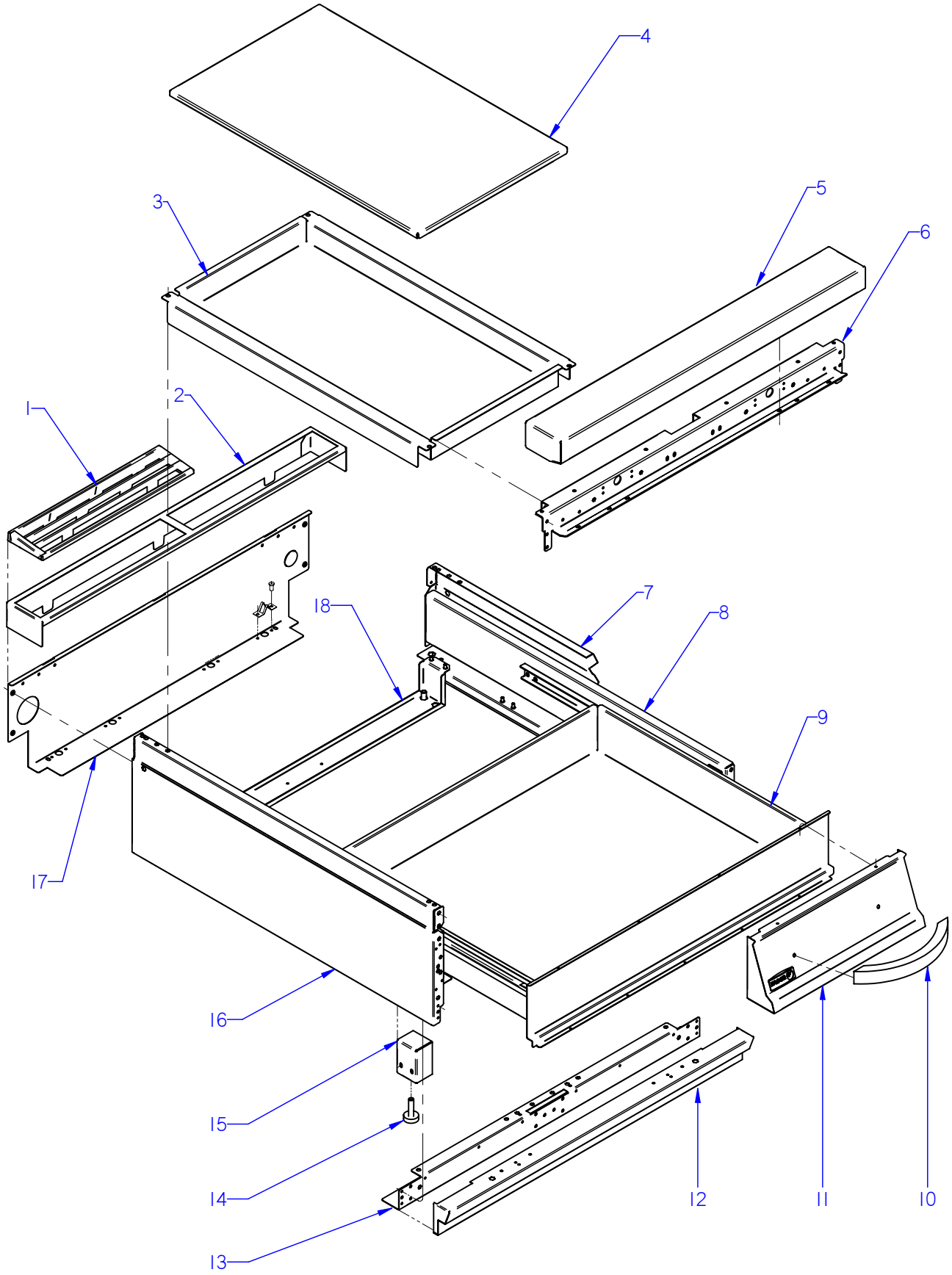

ITEM MARCADO EN COLOR = REPUESTO RECOMENDADO
COLOURED ITEM = RECOMMENDED SPARE PART

Nº plano / N º plane	Firma	Fecha / Date	Denominación / Denomination: MUEBLE / FITTING	Lamina / Sheet	
C-2935		2011-10	ELEMENTO NEUTRO EN9-05 / 10C AD	2	Fagor Industrial S.Coop. FAGOR Oñate

MOD.	ELEMENTO NEUTRO NEUTRAL ELEMENTS	ZONA / ZONE	MUEBLE / FITTING	PLANO DIAGRAM	C-2935

ITEM	CODIGO REFERENCE	DENOMINACION	DENOMINATION	EN9-05C AD	EN9-10C AD							ELIMINADO ELIMINATED	INTRODUCID. INTRODUCED	NOTAS
1	R205425000	EMBELLECEDOR ESMALTE	ENAMEL TRIM	1	2									
2	R205438000	SOPORTE EMBELLECEDOR 1/2M	1/2M TRIM SUPPORT	1	_									
2	R205439000	SOPORTE EMBELLECEDOR 1M	TRIM SUPPORT 1M	_	1									
	Q419005000	REMACHE 4X8 ALMG3 / ALUMINIO	RIVET 4X8 ALMG3 / ALUMINI.	2	2									
3	R376102000	CUBA EN9-05 AD	TUB EN9-05 AD	1	_									
3	R396102000	CUBA EN9-10 AD	TUB EN9-10 AD	_	1									
	Q012031000	TORNILLO EXAGONAL M5x10 A304	HEXAGONAL BOLT M5x10	6	6									
4	R375427000	MESA COMPLETA EN9-05 AD	COMPLETE TABLE EN9-05 AD	1	_									
4	R395425000	MESA COMPLETA EN9-10 AD	COMPLETE TABLE EN9-10 AD	_	1									
5	U965415000	ANTERIOR MESA 0,5 M AD	BENCH FRONT 0.5 M AD	1	_									
5	S105403000	ANTERIOR MESA 1 M AD	BENCH FRONT 1 M AD	_	1									
	Q042032000	TORNILLO AVELLLANADO M5X15	COUNTERSUNK BOLT M5x15	1	2									
6	R042611000	ESCUA INTER AMAR ANTE 0,5 M	BRACKET INTER FASTE. FRONT (	1	_									
6	U042610000	ESCUA INTER AMAR ANTE 1 M	BRACKET INTER FASTE. FRONT (	_	1									
	Q012032000	TORNILLO EXAGONAL M5x15 A304	HEXAGONAL BOLT M5x10 A304	6	6									
	Q221342000	REMACHE EXAGONAL M5	HEXAGONAL RIVET M5	3	3									
7	R062810000	PANEL LATERAL DERECHO	RIGHT SIDE PANEL	1	1									
	Q221342000	REMACHE EXAGONAL M5	HEXAGONAL RIVET M5	5	5									
	Q221345000	REMACHE EXAGONAL M10	HEXAGONAL RIVET M10	2	2									
	Q221343000	REMACHE EXAGONAL M6	HEXAGONAL RIVET M6	1	1									
	Q152004000	TORN. APLASTADO M5x13 A304	FLAT HEADED BOLT M5x13	1	1									
	Q419005000	REMACHE 4x8 ALMG3 / ALUMINIO	RIVET 4X8 ALMG3/ALUMINIUM	2	2									
8	R372662000	LATERAL INT. DCHO. EN9-05 C AD	RIGHT INTERIOR SIDE EN9-05 C	1	1									
8	R372663000	LATERAL INT. IZDO. EN9-05 C AD	LEFT INTERIOR SIDE EN9-05 C	1	1									
	Q419005000	REMACHE 4x8 ALMG3 / ALUMINIO	RIVET 4X8 ALMG3/ALUMINIUM	10	10									
	Q221342000	REMACHE EXAGONAL M5	HEXAGONAL RIVET M5	4	4									
9	R372667000	CAJON COMPLETO EN9-05C AD	COMPLE. DRAWER EN9-05C AD	1	_									
9	R372665000	CAJON COMPLETO EN9-10C AD	COMPLE. DRAWER EN9-10C AD	_	2									
10	R372811000	ASA CAJON COMPLETO	COMPLETE DRAWER HANDLE	1	2									
	Q412005000	REMACHE AVINOX Ø3,2x6mm	AVINOX RIVETØ3,2x6mm	5	9									

MOD.	ELEMENTO NEUTRO NEUTRAL ELEMENTS	ZONA / ZONE	MUEBLE / FITTING	PLANO DIAGRAM	C-2935

ITEM	CODIGO REFERENCE	DENOMINACION	DENOMINATION	EN9-05C AD	EN9-10C AD							ELIMINADO ELIMINATED	INTRODUCID. INTRODUCED	NOTAS
11	R372839000	PORTAMANDOS EN9-05C	CONTROL HOLDER EN9-05C	1	_									
11	R372843000	PORTAMANDOS EN9-10C	CONTROL HOLDER EN9-10C	_	2									
	U022836000	ESCUDO FAGOR	FAGOR EMBLEM G700	1	1									
	Q221023000	CLIP SUJECIÓN RÁPIDA Ø5	RAPID CONNECT CLIP Ø5	2	2									
12	R062805000	ZOCALO EN9-05	SKIRTING EN9-05	1	_									
12	H352817000	ZOCALO EN9-10	SKIRTING EN9-10	_	1									
	Q012031000	TORNILLO EXAGONAL M5x10 A304	HEXAGONAL BOLT M5x10 A304	2	2									
	Q302022000	ARANDELA 16x6x1,2 A304	WASHER 16x6x1.2 A304	2	2									
13	U962645000	LISTON AMARRE ZOCALO 1/2M AD	SKIRTING FASTE. STRIP 1/2M AD	1	_									
13	U962625000	LISTON AMARRE ZOCALO 1 M AD	SKIRTING FASTE. STRIP 1 M AD	_	1									
	Q221342000	REMACHE EXAGONAL M5	HEXAGONAL RIVET M5	4	6									
14	Z200107000	PATA REGULABLE	ADJUSTABLE LEG	4	4									
	Q221345000	REMACHE EXAGONAL M10	HEXAGONAL RIVET M10	4	4									
15	U962627000	ESCUADRA AMARRE PATA AD	LEG FASTENING BRACKET AD	2	2									
	X010503000	CIERRE MUELLE	LOCK SPRING	2	2									
	Q419007000	REMACHE TUBULAR C/V Ø3,2x6	TUBULAR RIVET C/V Ø3.2X6	4	4									
	Q162030000	TUERCA EXAGONAL M5	HEXAGONAL NUT M5	4	4									
	Q302022000	ARANDELA 16x6x1,2 A304	WASHER 16x6x1.2 A304	4	4									
16	R062811000	PANEL LATERA IZQUIERDO G-900	LEFT SIDE PANEL G-900	1	1									
	Q221342000	REMACHE EXAGONAL M5	HEXAGONAL RIVET M5	5	5									
	Q221345000	REMACHE EXAGONAL M10	HEXAGONAL RIVET M10	2	2									
	Q221343000	REMACHE EXAGONAL M6	HEXAGONAL RIVET M6	1	1									
	Q152004000	TORN. APLASTADO M5x13 A304	FLAT HEADED BOLT M5x13	1	1									
	Q419005000	REMACHE 4x8 ALMG3 / ALUMINIO	RIVET 4X8 ALMG3 / ALUMINIUM	2	2									
17	R042838000	PANEL POSTERIOR 0,5 M AD	REAR PANEL 0.5 M AAD	1	_									
17	U042805000	PANEL POSTERIOR 1 M AD	REAR PANEL 1 M AD	_	1									
	Q419005000	REMACHE 4x8 ALMG3 / ALUMINIO	RIVET 4X8 ALMG3 ALUMINIUM	4	4									
	X010503000	CIERRE MUELLE	LOCK SPRING	1	2									
	Q419007000	REMACHE TUBULAR C/V Ø 3,2x6	TUBULAR RIVET C/V Ø3.2X6	2	4									

MOD.	ELEMENTO NEUTRO NEUTRAL ELEMENTS	ZONA / ZONE	MUEBLE / FITTING	PLANO DIAGRAM	C-2935

ITEM	CODIGO REFERENCE	DENOMINACION	DENOMINATION	EN9-05C AD	EN9-10C AD							ELIMINADO ELIMINATED	INTRODUCID. INTRODUCED	NOTAS
18	U042604000	REFUERZO POSTE. PATAS 1/2M AD	LEG BACK REINFORCE.1/2M AD	1	_									
18	U042611000	REFUERZO POSTE. PATAS 1 M AD	LEG BACK REINFORCE.1 M AD	_	1									
	Q162030000	TUERCA EXAGONAL M5	HEXAGONAL NUT M5	4	4									
	Q302022000	ARANDELA 16x6x1,2 A304	WASHER 16X6X1.2 A.304	4	4									
	Q221345000	REMACHE EXAGONAL M10	HEXAGONAL RIVET M10	2	2									