DESPIECE TECNICO

Planchadoras
Roller Ironers

Modelo / Model :

PE-30 / 160 MP
PE-30 / 200 MP

Febrero 2012 February

Fagor Industrial

LEGENDA PEZZI, LIST OF PARTS, LISTE DES PIÈCES, ERSATZTEILLISTE, LISTA DE REPUESTOS					
Model	**160/30**	**160/30 AV**	**160/30 AVL**	**200/30 AV**	**200/30 AVL**

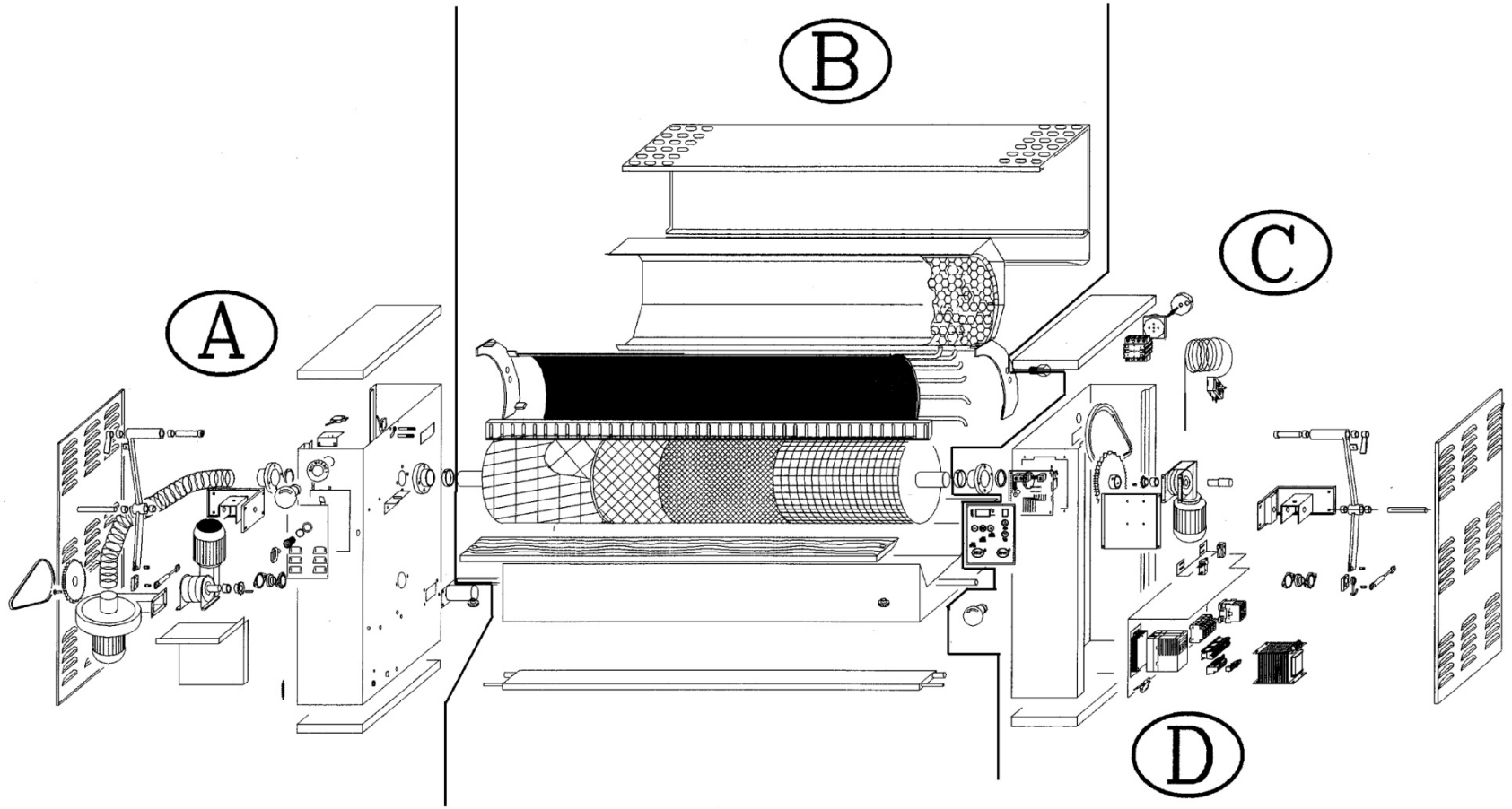

Dx e Sx sono visti dal lato posteriore della macchina
Right and left views from the rear
Droite et gauche sont vus de l'arrière de la machine
Rechts und links von hinten gesehen
Derecha e izquierda vistos desde atrás

LEGENDA PEZZI , SPARE PART LIST					Fig. A
Model	**160/30**	**160/30 AV**	**160/30 AVL**	**200/30 AV**	**200/30 AVL**

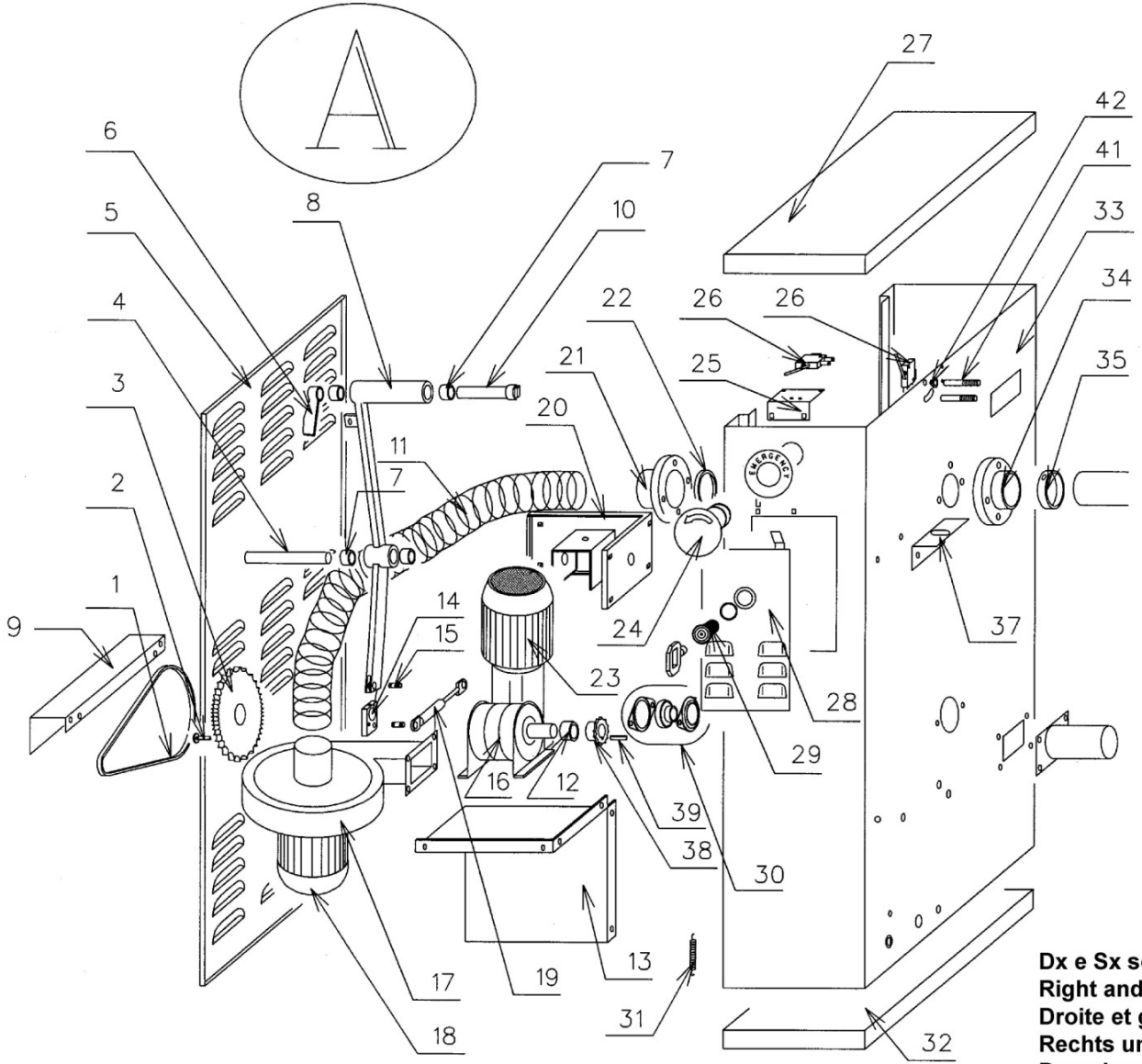

Dx e Sx sono visti dal lato posteriore della macchina
Right and left views from the rear
Droite et gauche sont vus de l'arrière de la machine
Rechts und links von hinten gesehen
Derecha e izquierda vistos desde atrás

LEGENDA PEZZI , SPARE PART LIST						FIG. A	
Model		160/30	160/30 AV	160/30 AVL	200/30 AV	200/30 AVL	
POS.	COD.	DESCRIZIONE	DESCRIPTION	NOTE			
1	GR543014000300	Catena	Chain	Till SN≤J0225000946 L = 750 mm			
	GR550000701065			From SN≥J0225000947 L = 721,5 mm			
2	GR540401300650	Vite di sicurezza in ottone M6X50	Brass safety screw M6x50	Till SN≤J0225000946			
3	GR550000701063	Corona Z54 3/8"	Ring gear Z54 3/8"	Till SN≤J0225000946			
	GR550000701061	Corona Z40 3/8"	Ring gear Z40 3/8"	From SN≥J0225000947			
4	GR550000000027	Perno centrale	Centre pin				
5	GR550000000040	Porta	Door				
6	GR550000000020	Staffa fine corsa superiore	Upper limit bracket				
7	GR550000701013	Boccola bronzo	Brass bush	20 x 25 x 20			
8	GR550000000008	Leva movimento conca DX	Right basin movement lever				
9	GR550000000095	Carter catena	Chain casing				
10	GR550000000026	Perno superiore testa quadra	Square-head upper pin				
11	GR550000701014	Tubo aspirazione	Suction tube				
12	GR550000000022	Distanziale movimento conca	Basin movement spacer				
13	GR550000000067	Supporto motore conca	Basin motor support				
14	GR550000000030	Staffa supp. molle a gas lato aspir.	Gas springs bracket suction side	Till SN≤J0225000946			
15	GR540405000850	Perno filettato	Threaded pin	M8 x 50			
16	GR550000751052	Riduttore conca	Basin reduction gear	RMI 40 D 1/100			
17	GR550000751055	Ventola CPF 160	Fan CPF 160	50 & 60 Hz			
18	GR550000751054	Motore aspirazione	Extracting motor	0,12 Kw , 50 & 60 Hz			
19	GR550000701070	Molle a gas 900 N	Gas springs 900 N	Till SN≤J0225000946			
	GR550000701069	Molle a gas 800 N	Gas springs 800 N	From SN≥J0225000947			
20	GR550000000042	Supp. movim. bracci DX ass.to	Assembled right arm movem. supp.				
21	GR550000000024	Flangia supp. rullo lato aspirazione	Roller support flance-suction side				
22	GR550000701080	Cuscinetto	Ball bearing	61809 2RS1			
23	GR540651000050	Motore conca	Basin motor	0,18 Kw , 50 & 60 Hz			
24	GR540751000025	Pulsante a fungo	Emergency button				
	GR540751000024	Contatto pulsante	Push butt. contact				
	GR540751000026	Etichetta emergenza	Emergency label				
25	GR550000000085	Supporto micro sportello	Door microsw. support				
26	GR54-GI-651130	Micro salvadita	Finger safety microsw.				
27	GR550000000038	Chiusura superiore	Upper lock				
28	GR543014002100	Sportello d'emergenza	Emergency lid				
29	GR540601000079	Serratura completa	Complete lock				

LEGENDA PEZZI , SPARE PART LIST						FIG. A	
Model	**160/30**	**160/30 AV**	**160/30 AVL**	**200/30 AV**	**200/30 AVL**		
POS.	COD.	DESCRIZIONE	DESCRIPTION			NOTE	
30	GR550000701072	Cuscinetto SB 205	Ball bearing SB 205				
31	GR540601000050	Molla pedaliera	Pedal spring				
32	GR550000000039	Chiusura inferiore DX	Right upper lock				
33	GR550000000051	Fianco DX	Right side panel				
34	GR550000000025	Flangia supp. rullo	Roller support flange				
35	GR550000000012	Anello di centraggio rullo + nylon	Roller centering ring w/nylon				
37	GR550000000016	Supporto asse in legno	Wood board support				
38	GR543014000500	Pignone	Pinion			Z16 3/8" 50 & 60Hz	
39	GR540405006620	Chiavetta	key			6 x 6 x 20	
41	GR550000000017	Piolo x asta salvadita	Finger safety rod pin				
42	GR550000701007	Boccola flangiata	Flange bush			6X10X14X2X6	

LEGENDA PEZZI, LIST OF PARTS, LISTE DES PIÈCES, ERSATZTEILLISTE, LISTA DE REPUESTOS					Fig. B
Model	**160/30**	**160/30 AV**	**160/30 AVL**	**200/30 AV**	**200/30 AVL**

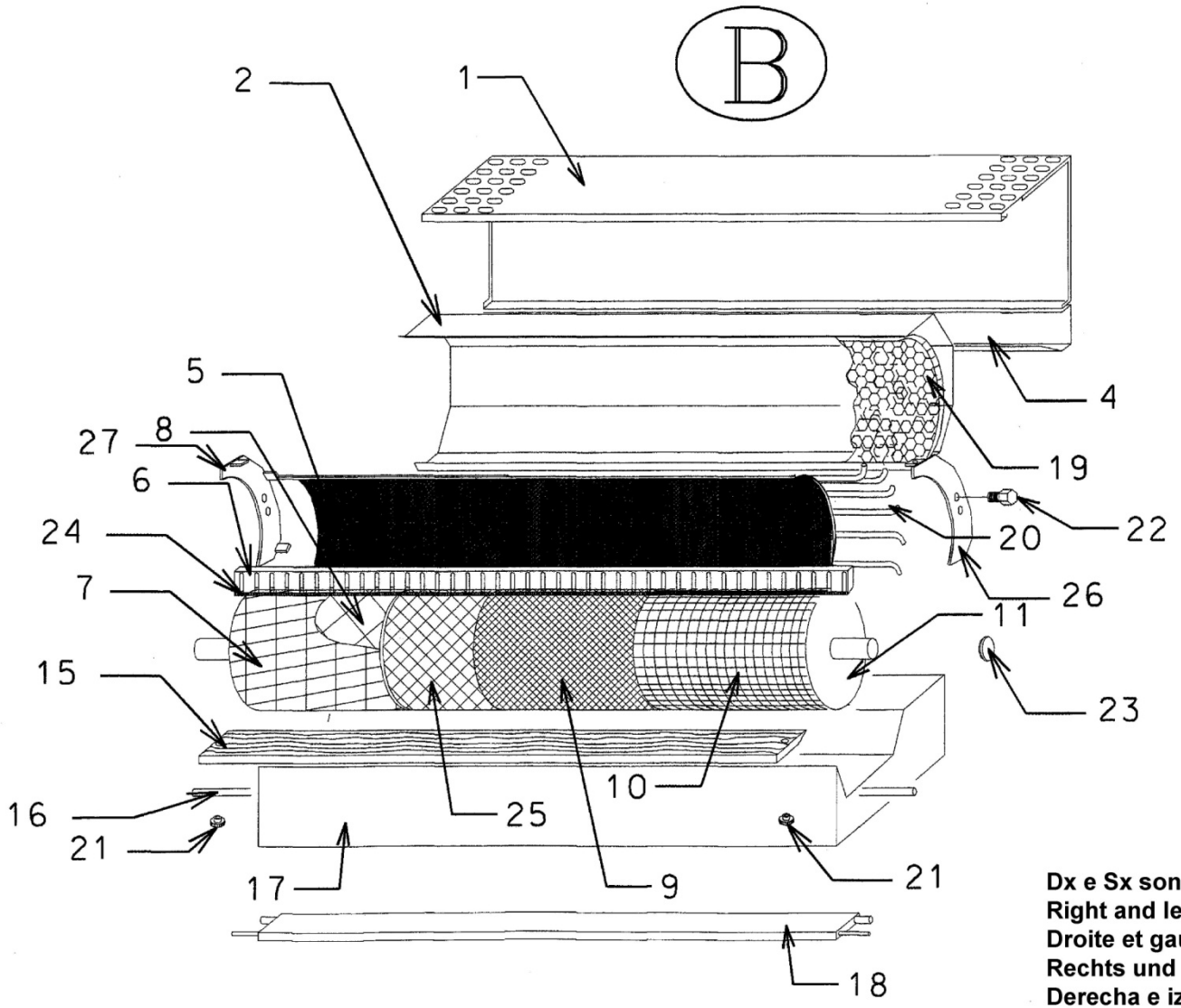

Dx e Sx sono visti dal lato posteriore della macchina
Right and left views from the rear
Droite et gauche sont vus de l'arrière de la machine
Rechts und links von hinten gesehen
Derecha e izquierda vistos desde atrás

LEGENDA PEZZI , SPARE PART LIST					FIG. B
Model	**160/30**	**160/30 AV**	**160/30 AVL**	**200/30 AV**	**200/30 AVL**

POS.	COD.	DESCRIZIONE	DESCRIPTION	NOTE	
1	GR550016000058	Carter esterno posteriore	Rear outer casing	160/30	
	GR550020000058			200/30	
2	GR550016000093	Copriresistenze	Heater guard	160/30	
	GR550020000093			200/30	
4	GR550016000059	Carter posteriore inferiore	Rear lower casing	160/30	
	GR550020000059			200/30	
5	GR550016000065	Conca alluminio	Aluminium press basin	160/30	
	GR550020000065			200/30	
6	GR550016000083	Asta salvadita	Finger safety rod	160/30	
	GR550020000083			200/30	
7	GR54-GI-701017	Telo cotone	Cotton sheet	160/30 , 160 AV	
	GR 54-GI-701035	Telo Nomex	Nomex sheet		
	GR54-GI-701020	Telo cotone	Cotton sheet	200/30AV	
	GR54-GI-701038	Telo Nomex	Nomex sheet		
	GR54-GI-701039	Mollettone NOMEX	Nomex flannel layer	160/30 AVL	
	GR54-GI-701040			200/30 AVL	
8	GR54-GI-701016	Mollettone	Flannel layer	160/30 , 160/30 AV	
	GR54-GI-701019			200/30AV	
9	GR53-GI-100011	Lana acciaio	Steel wool	5kg 160/30 , 160/30 AV , 8Kg 200/30 AV	
10	GR540100000500	Rete metallica	Metal net	5 mt 160/30AV , 6 mt 200/30 AV	
	GR53-GI-100015	Rivestimento lamellare	Lamellar coating	63 mt 160/30 AVL , 79 mt 200/30 AVL	
11	GR550016000043	Rullo + albero	Roller and shaft	160/30	
	GR550020000043			200/30	
15	GR550016701059	Asse in legno	Wood board	160/30	
	GR550020701088			200/30	
16	GR550016000033	Albero sost. movimento 160/30	Movement supp. shaft 160/30	Till SN≤J0225000946	
	GR550016000034			From SN≥J0225000947	
	GR550020000033	Albero sost. movimento 200/30	Movement supp. shaft 200/30	Till SN≤J0225000946	
	GR550020000034			From SN≥J0225000947	
17	GR550016000048	Portabiancheria ass.to	Assembled laundry basket	160/30	
	GR550020000048			200/30	
18	GR550016000035	Pedaliera	Pedal	160/30	
	GR550020000035			200/30	

LEGENDA PEZZI , SPARE PART LIST						FIG. B	
Model		**160/30**	**160/30 AV**	**160/30 AVL**	**200/30 AV**	**200/30 AVL**	
POS.	COD.	DESCRIZIONE	DESCRIPTION	NOTE			
19	GR540205001440	Fibra ceramica dim	Ceramic fibre size	500x1440x25 160/30			
	GR540205001840			500x1840x25 200/30			
20	GR550751000012	Resistenza coraz	Shielded heater	2,2/2,5kW , 6 pcs 160/30			
	GR550751000013			2,8/3,1kW , 6 pcs 200/30			
21	GR540601000102	Pomello fissaggio asse in legno	Wood board fastening knob				
22	GR550000000013	Vite regolazione conca	Basin adjusting screw				
23	GR550000000047	Tappo chiusura rullo	Roller closing plug				
24	GR550000701048	Trafilato mousse/ad	Foamed profile/ad	10 x 3			
25	GR54-GI-701015	Telo juta	Jute sheet	160/30 no fan option			
26	GR550000000062	Supporto Sx conca alluminio	Right support for aluminium basin				
27	GR550000000063	Supporto Dx conca alluminio	Left support for aluminium basin				

LEGENDA PEZZI , SPARE PART LIST					Fig. C
Model	**160/30**	**160/30 AV**	**160/30 AVL**	**200/30 AV**	**200/30 AVL**

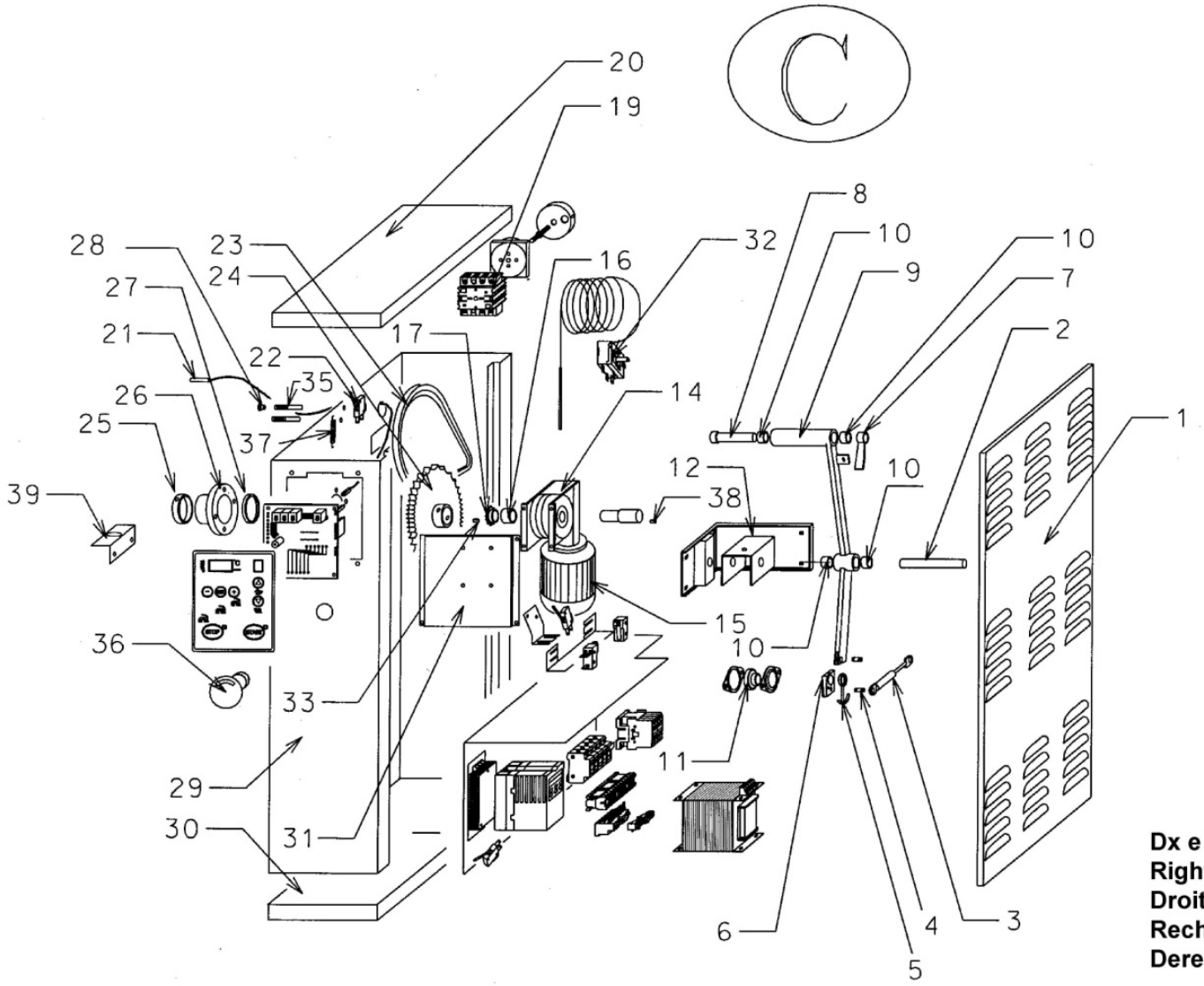

Dx e Sx sono visti dal lato posteriore della macchina
Right and left views from the rear
Droite et gauche sont vus de l'arrière de la machine
Rechts und links von hinten gesehen
Derecha e izquierda vistos desde atrás

LEGENDA PEZZI , SPARE PART LIST						FIG. C	
Model	160/30	160/30 AV	160/30 AVL	200/30 AV	200/30 AVL		
POS.	COD.	DESCRIZIONE	DESCRIPTION	NOTE			
1	GR550000000040	Porta	Door				
2	GR550000000027	Perno centrale	Centre pin				
3	GR550000701070	Molle a gas 900 N	Gas springs 900 N	Till SN≤J0225000946			
	GR550000701069	Molle a gas 800 N	Gas springs 800 N	From SN≥J0225000947			
4	GR540405000850	Perno filettato	Threaded pin	M8 x 50			
5	GR550000000066	Staffa per micro	Microsw. bracket	Till SN≤J0225000946			
6	GR550000000023	Staffe supp. molle a gas	Gas springs bracket	Till SN≤J0225000946			
7	GR550000000020	Staffa fine corsa superiore	Upper limit bracket				
8	GR550000000026	Perno superiore testa quadra	Square-head upper pin				
9	GR550000000009	Leva movimento conca SX	Left basin movem. lever				
10	GR550000701013	Boccola bronzo	Brass bush	20 x 25 x 20			
11	GR550000701072	Cuscinetto SB 205	Ball bearing SB 205				
12	GR550000000043	Supp. movim. braccio SX ass.to	Assem. left arm movem. support				
14	GR550751000052	Riduttore rullo	Roll. Gear box	RMI40 160/30 160/30 AV			
	GR550000751056			RMI50 160AVL , 200/30AV , 200/30 AVL			
15	GR550751000050	Mot.rullo	Roller motor	0,18 Kw , 160/30 160/30 AV			
	GR550000751051			0,37 Kw , 160/30AVL , 200/30AV , 200/30AVL			
16	GR550000000031	Dist. x motoriduttore	Spacer for motor reduction gear				
17	GR550000701081	Pignone	Pinion	Z18 3/8"			
	GR550000701082			Z15 3/8" , 160/30 60 Hz			
19	GR50-GI-851165	Sezionatore tripolare	Three-pole cutoff	400-415 VAC market			
	GR50-GI-851166			230VAC 3ph market			
20	GR550000000038	Chiusura superiore	Upper lock				
21	GR540751000021	Sonda PT100	PT100 probe				
22	GR54-GI-651130	Micro salvadita	Finger safety microsw.				
23	GR550000701064	Catena L=770mm	Chain L=770mm				
24	GR550000701062	Corona	Ring gear				
25	GR550000000012	Anello di centraggio rullo	Roller centering ring				
26	GR550000000025	Flangia supp. rullo esterna	Outer roller supp. flange				
27	GR550000701080	Cuscinetto	Ball bearing	61809 2RS1			
28	GR550000701007	Boccola flangiata	Flange bush	6X10X14X2X6			
29	GR550000000052	Fianco SX scheda	Card left side panel				
30	GR550000000041	Chiusura inferiore SX	Left bottom lock				

LEGENDA PEZZI , SPARE PART LIST						FIG. C	
Model		**160/30**	**160/30 AV**	**160/30 AVL**	**200/30 AV**	**200/30 AVL**	
POS.	COD.	DESCRIZIONE	DESCRIPTION			NOTE	
31	GR550000000068	Staffa supp. motore rullo	Roller motor bracket			160/30	
	GR550000000069					200/30	
32	GR540751000028	Termost. di sicurezza	Safety thermostat				
33	GR540405007820	Chiavetta	Key			7 x 8 x 20	
35	GR550000000017	Piolo X asta salvadita	Pin for finger safety rod				
36	GR540751000025	Pulsante a fungo	Emergency button				
	GR540751000024	Contatto pulsante	Push butt. contact				
	GR540751000026	Etichetta emergenza	Emergency label				
37	GR540601000050	Molla X asta salvadita	Spring for finger safety rod				
38	GR540405006620	Chiavetta	Key			6 x 6 x 20	
39	GR550000000016	Supporto asse in legno	Wood board support				

LEGENDA PEZZI , SPARE PART LIST					Fig. D
Model	**160/30**	**160/30 AV**	**160/30 AVL**	**200/30 AV**	**200/30 AVL**

Dx e Sx sono visti dal lato posteriore della macchina
Right and left views from the rear
Droite et gauche sont vus de l'arrière de la machine
Rechts und links von hinten gesehen
Derecha e izquierda vistos desde atrás

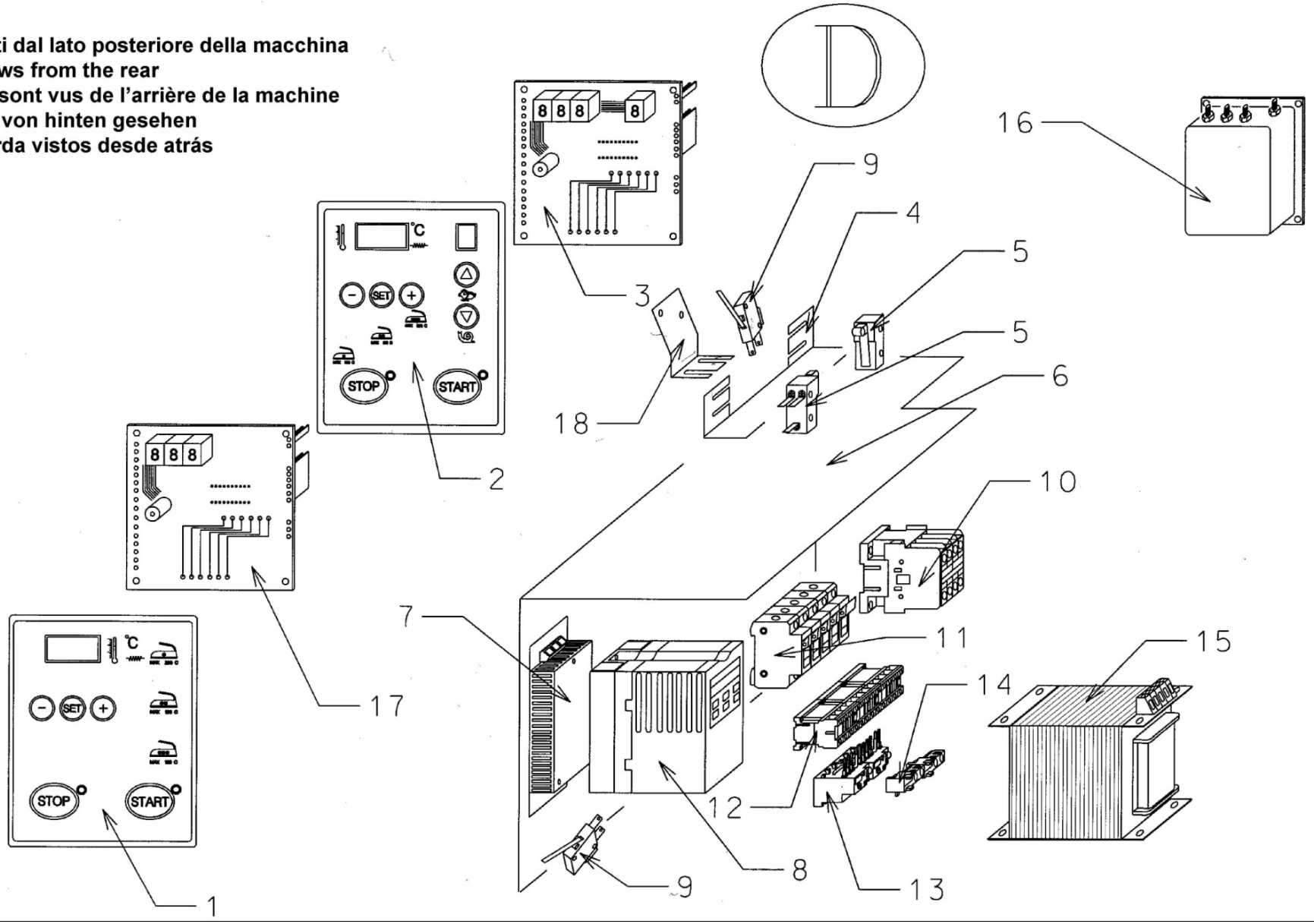

LEGENDA PEZZI , SPARE PART LIST					FIG. D
Model	**160/30**	**160/30 AV**	**160/30 AVL**	**200/30 AV**	**200/30 AVL**

POS.	COD.	DESCRIZIONE	DESCRIPTION	NOTE	
1	GR540601000041	Cruscotto SDT	Standard control panel	160/30 L = 130mm no speed control	
	GR540601000043			160/30 customized no speed control	
2	GR540601000020	Cruscotto VV	Control panel VV	With speed control L=150mm	
	GR540601000044			With speed control customized	
3	GR540601000024	Scheda comando	Control card	With speed control version	
4	GR550000000082	Staffa supp. micro quadro elettr.	Ctrl.brd microsw. supp. bracket	Till SN≤J0225000946	
5	GR50-GI-951021	Micro finecorsa	Limit microswitch		
6	GR550000000080	Piastra quadro elettrico	Ctrl.brd plate		
7	GR540751000041	Filtro SF 1320 D	Filter SF 1320 D	From SN ≥J0225002606	
8	GR540751000042	Inverter	Inverter	FR-D 720S-014-EC From SN ≥J0225002606	
9	GR54-GI-651130	Micro salvadita	Finger safety switch		
10	GR50-851000249	Contattore	Contactor	160/30 , market440 , 415 , 400 VAC	
	GR50-851000249			200/30 , market440 , 415 , 400 VAC	
11	GR50-GI-851121 x 5	Portafusibili	Fuse holder	Market 400-440 VAC	
	GR50-GI-851121 x 2 + GR50-GI-851122 x 1	Portafusibili	Fuse holder	Market 230VAC 3ph	
	GR999997000020 x 2 GR999997000250 x 3	Fusibile L=38 , diam 10,3 , 2 Amp Fusibile L=38 , diam 10,3 , 25 Amp	Fuse L=33 , diam 10,3 , 2 Amp Fuse L=33 , diam 10,3 , 25 Amp	160/30 market 400 VAC	
	GR999997000020 x 2 GR999997000400 x 3	Fusibile L=38 , diam 10,3 , 2 Amp Fusibile L=51 , diam 14 , 40 Amp	Fuse L=33 , diam 10,3 , 2 Amp Fuse L=51 , diam 14 , 40 Amp	160/30 market 230VAC 3ph	
	GR999997000040 x 2 GR999997000250 x 3	Fusibile L=38 , diam 10,3 , 4 Amp Fusibile L=38 , diam 10,3 , 25 Amp	Fuse L=33 , diam 10,3 , 4 Amp Fuse L=33 , diam 10,3 , 25 Amp	160/30AV , 200/30AV market 400-440VAC	
	GR999997000040 x 2 GR999997000400 x 3	Fusibile L=38 , diam 10,3 , 4 Amp Fusibile L=51 , diam 14 , 40 Amp	Fuse L=33 , diam 10,3 , 4 Amp Fuse L=51 , diam 14 , 40 Amp	160/30AV , 160/30AVL , 200/30AV market 230VAC 3ph	
	GR999997000040 x 2 GR999997000100 x 3	Fusibile L=38 , diam 10,3 , 4 Amp Fusibile L=38 , diam 10,3 , 10 Amp	Fuse L=33 , diam 10,3 , 4 Amp Fuse L=33 , diam 10,3 , 10 Amp	160/30 AV , 160/30 AVL , 200/30 AV , 200/30 AVL steam heated 400VAC	
12	GR50-851000262	Minicontattore	Minicontactor	MC1A301AT6 4 KW 230V	
13	GR50-851000265	Termica	Overload cutout	Market 415 , 400 VAC	
14	GR50-851000268	Ausiliario	Auxiliary		
15	GR50-851000283	Trasformatore	Tranformer	Version without speed control 50 VA	
	GR50-851000284			Version with speed control 320 VA	
16	GR550751000280	Filtro	Filter	Till S.N. ≤J0225002605	
17	GR540601000022	Scheda comando	Control card	160/30 Without speed control version	
18	GR543014002601	Staffa supporto micro fasi	Phase microswitch support bracket	Till SN≤J0225000946	
	GR550000000089			From SN≥J0225000947	

LEGENDA PEZZI , SPARE PART LIST					Fig. E
Model	**160/30**	**160/30 AV**	**160/30 AVL**	**200/30 AV**	**200/30 AVL**

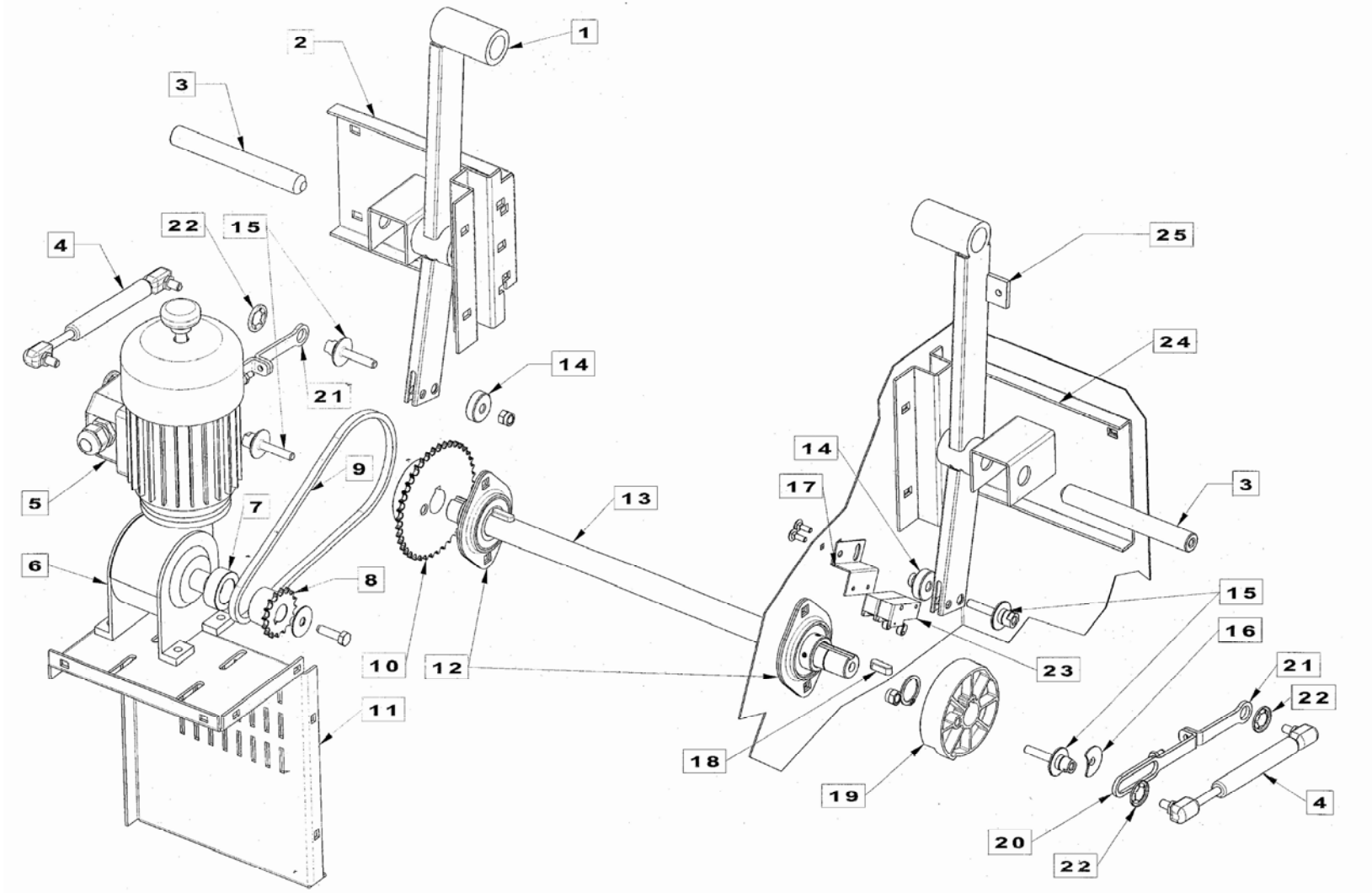

E

VERSIONE A CAMME - CAM VERSION - VERSION À CAMES/NOCKENAUSFÜHRUNG/VERSIÓN A LEVAS

LEGENDA PEZZI , SPARE PART LIST					FIG. E
Model	**160/30**	**160/30 AV**	**160/30 AVL**	**200/30 AV**	**200/30 AVL**

POS.	COD.	DESCRIZIONE	DESCRIPTION	NOTE
1	GR550000000008	Leva movimento conca DX	Right basin movement lever	
2	GR550000000042	Supp. movim. bracci DX ass.to	Assembled right arm movem. supp.	
3	GR550000000027	Perno centrale	Centre pin	
4	GR550000701070	Molle a gas 900 N	Gas springs 900 N	Till SN≤J0225000946
	GR550000701069	Molle a gas 800 N	Gas springs 800 N	From SN≥J0225000947
5	GR540651000050	Motore conca	Basin motor	0,18 Kw , 50 & 60 Hz
6	GR550000751052	Riduttore conca	Basin reduction gear	RMI 40 D 1/100
7	GR550000000022	Distanziale movimento conca	Basin movement spacer	
8	GR543014000500	Pignone	Pinion	Z16 3/8" 50 & 60Hz
9	GR543014000300	Catena	Chain	Till SN≤J0225000946 L = 750 mm
	GR550000701065			From SN≥J0225000947 L = 721,5 mm
10	GR550000701063	Corona Z54 3/8"	Ring gear Z54 3/8"	Till SN≤J0225000946
	GR550000701061	Corona Z40 3/8"	Ring gear Z40 3/8"	From SN≥J0225000947
11	GR550000000067	Supporto motore conca	Basin motor support	
12	GR550000701072	Cuscinetto SB 205	Ball bearing SB 205	
13	GR550016000033	Albero sost. movimento 160/30	Movement supp. shaft 160/30	Till SN≤J0225000946
	GR550016000034			From SN≥J0225000947
	GR550020000033	Albero sost. movimento 200/30	Movement supp. shaft 200/30	Till SN≤J0225000946
	GR550020000034			From SN≥J0225000947
14	GR550000000007	Distanziale leva movimento DX e SX	Right and left drive lever spacer	From SN≥J0225000947
15	GR550000000006	Perno guida molle a gas	Gas spring guide pin	From SN≥J0225000947
16	GR550000000004	Rondella di contenimento camme	Cam holding washer	From SN≥J0225000947
17	GR543014002601	Staffa supporto micro fasi	Phase microswitch support bracket	Till SN≤J0225000946
	GR550000000089			From SN≥J0225000947
18	GR540405007820	Chiavetta	Key	7 x 8 x 20
19	GR550000000005	Camme posizonamento conca	Press placing cams	From SN≥J0225000947
20	GR550000000105	Semibiella anteriore ritorno conca	Press return fore connecting rod	From SN≥J0225000947
21	GR550000000110	Semibiella posteriore ritorno conca	Press return rear connecting rod	From SN≥J0225000947
22	GR540405000028	Anello elastico	Elastic ring	UNI7064 Till SN≤J0225001450
	GR540405000015	Seeger diam 15	Seeger diam 15	UNI7435 from SN≥J0225001451
23	GR50-GI-951021	Microinterruttore finecorsa	Limit switch	
24	GR550000000043	Supp. movim. braccio SX ass.to	Assem. left arm movem. support	
25	GR550000000009	Leva movimento conca SX	Left basin movem. lever	