FAGOR

FAGOR INDUSTRIAL

DESPIECE TÉCNICO
TECHNICAL PARTS

Lavavajillas

Dishwasher

MODELOS
AD-505 / SOFT

Diciembre 2014 December
Revisado Diciembre 2015 December Revised



Together we evolve

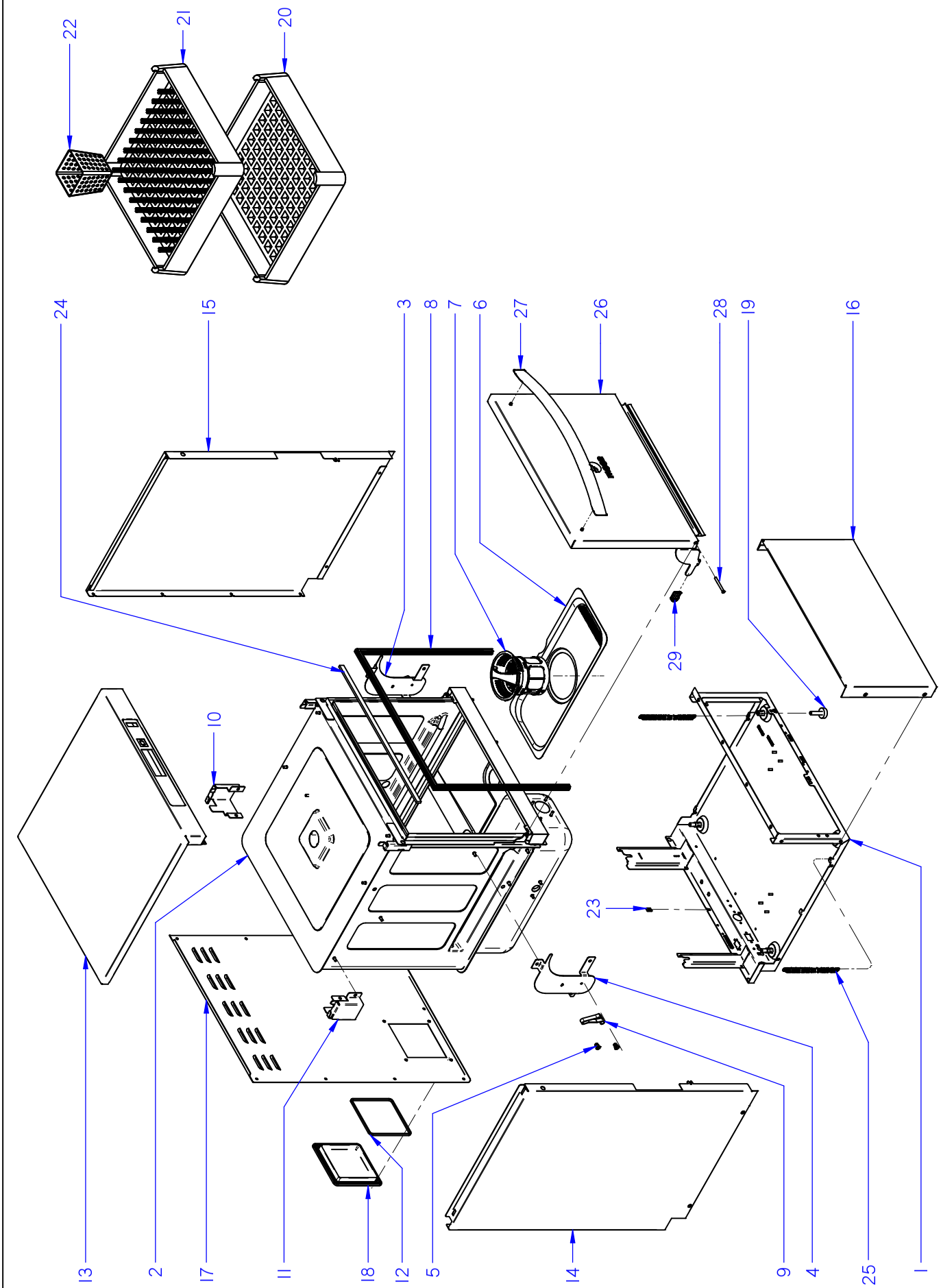

ITEM MARCADO EN COLOR = REPUESTO RECOMENDADO
COLOURED ITEM = RECOMMENDED SPARE PART

N plano / Drawing N.	Firma / Signature	Fecha / Date	Aparato / Appliance	Lamina / Sheet	
C-3280	Iban R.	2014-09	ARMAZON / FRAME LAVAVAJILLAS AD-505 DISHWASHER	1	Fagor Industrial S.Coop. FAGOR Onate

ZONA / ZONE	ARMAZON / FRAME	LÁMINA / DRAWING	C-3280	FAGOR

ITEM	REFERENCIA REFERENCE	DENOMINACIÓN	DENOMINATION	AD-505							RECOMMENDED	ELIMINADO ELIMINATED	INTRODUCIDO INTRODUCED	NOTAS / NOTES
1	12097740	CONJUNTO_BASE_ARMAZON_AF	BASE FRAME COMPLETE	1										
2	12049298	CAJA SOLDADA ADVANCE	WELDED TUB	1										
3	12043455	SOPORTE RESORTE PUERTA DCHA	DOOR SPRING RIGHT SUPPORT	1										
4	12043457	SOPORTE RESORTE PUERTA IZDA	DOOR SPRING LEFT SUPPORT	1										
5	12043554	EJE RESORTE	SPRING SHAFT	4										
6	12110082	BANDEJA FILTRO ADVANCE COMPL.	ADVANCE FILTER TRAY COMPLETE	1										
7	12049741	CESTILLO RECOGEDOR ADVANCE	ADVANCE DUSTPAN BASKET	1										
8	12049352	BURLETE APERTURA FRONTAL	FRONT LOADING GASKET	1										
9	12043429	RESORTE PUERTA	DOOR SPRING	2										
10	12103774	SUJECIÓN PANEL LATERAL DCHO.	RIGHT SIDE PANEL FASTENING	1										
11	12103787	SUJECIÓN PANEL LATERAL IZDO.	LEFT SIDE PANEL FASTENING	1										
12	12096947	JUNTA TAPA	COVER'S SEAL	1										
13	12104348	TAPA PORTAMANDOS ADVANCE	CONTROL PANEL COVER ADVANCE	1										
14	12122224	PANEL LATERAL IZDO	LEFT SIDE PANEL	1										
15	12122222	PANEL LATERAL DCHO	RIGHT SIDE PANEL	1										
16	12122220	PANEL FRONTAL	FRONT PANEL	1										
17	12120613	PANEL POSTERIOR ADVANCE	REAR PANEL ADVANCE	1										
18	12095220	TAPA PLASTICO CAJA CONEXIONES	CONNECTIONS BOX COVER	1										
19	12024163	PATA REGULABLE	REGULABLE FEET	4										
20	12025011	CESTILLO BASE CT-10	CT-10 BASE BASKET	1										
21	12024990	CESTILLO PLATOS CP-16-18	CP-16-18 PLATES BASKET	1										
22	12023745	CESTILLO CUBIERTOS	CUTLERY BASKET	1										
23	12087215	TUERCA RÁPIDA M5 MIKALOR	MIKALOR QUICK NUT M5	19										
24	12111378	ESPUMA CIERRE TAPA PORTAMAND.	CTRL. P. COVER CLOSURE FOAM	1										
25	12097279	MUELLE APERTURA FRONTAL	FRONT LOADING SPRING	2										
26	12097227	PUERTA COMPLETA	COMPLETE DOOR	1										
27	12049466	ASA PUERTA	DOOR HANDLE	1										
28	12048418	TORN_ESPECIAL_EJE_PUERTA_M6	DOOR AXIS SPECIAL SCREW M-6	2										
29	12047927	TOPE BISAGRA	HINGE DOORSTOP	2										

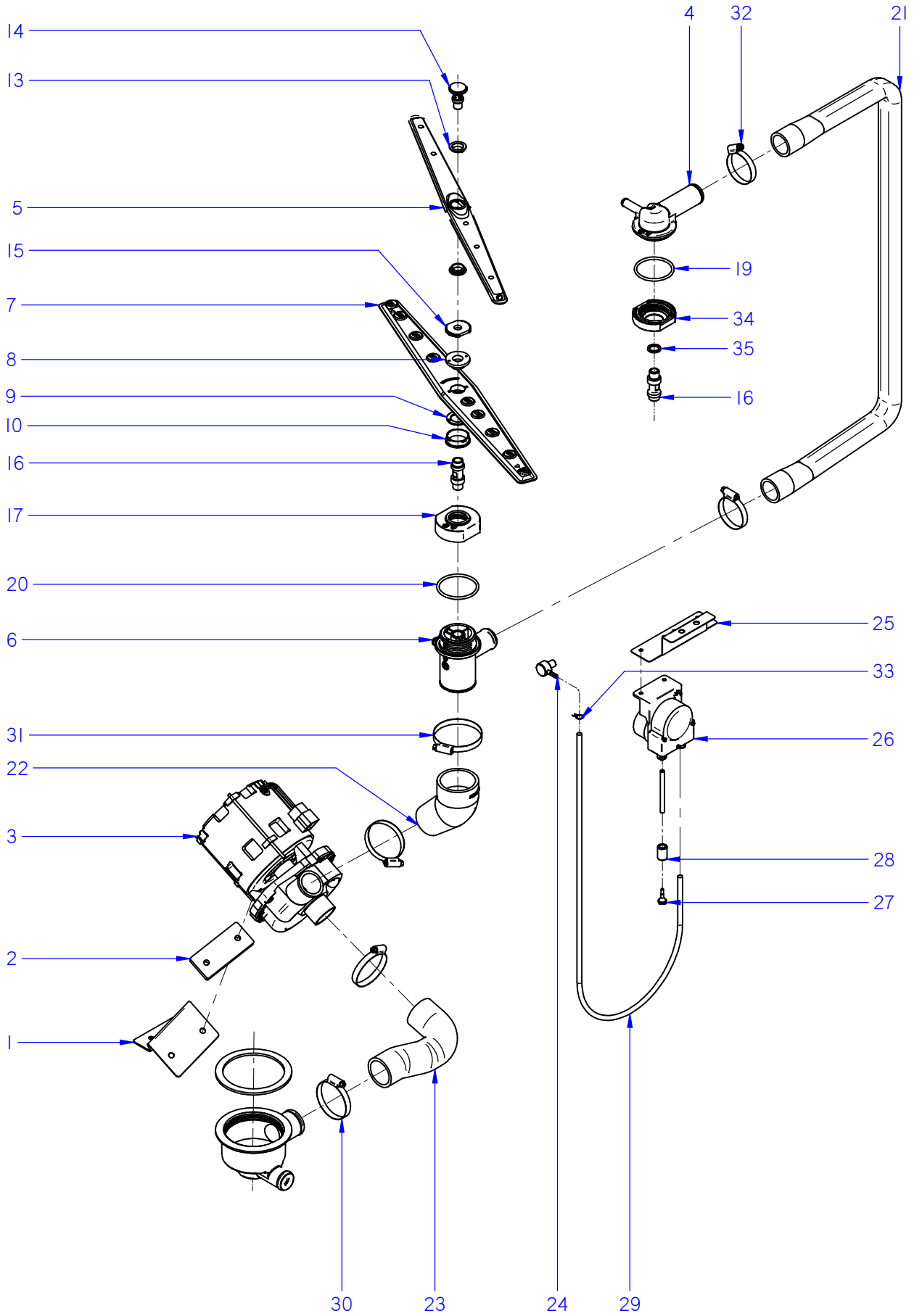

ITEM MARCADO EN COLOR = REPUESTO RECOMENDADO
COLOURED ITEM = RECOMMENDED SPARE PART

N plano / Drawing N.	Firma / Signature	Fecha / Date	Aparato / Appliance	Lamina / Sheet	
C-3281	Iban R.	07-2015	PARTE FUNCIONAL LAVADO / WASHING FUNCTIONAL PART LAVAVAJILLAS AD-505 DISHWASHER	2	Fagor Industrial S.Coop. FAGOR Onate

ZONA / ZONE	PARTE FUNCIONAL LAVADO / WASHING FUNCTIONAL PART	LÁMINA / DRAWING	C-3281	FAGOR

ITEM	REFERENCIA REFERENCE	DENOMINACIÓN	DENOMINATION	AD-505							RECOMMENDED	ELIMINADO ELIMINATED	INTRODUCIDO INTRODUCED	NOTAS / NOTES
1	12043784	SOPORTE BOMBA LAVADO	WASHIG PUMP SUPPORT	1										
2	12023556	BASE BOMBA LAVADO 1003016	WASHIG PUMP BASE 1003016	1										
3	12043287	MOTOBOMBA 590KW 50Hz	WASHIG PUMP 590KW 50Hz	1							X			
3	12102834	MOTOBOMBA 590KW 60Hz	WASHIG PUMP 590KW 60Hz	1							X			
4	12041614	SOP. DISTRIBUIDOR SUPERIOR	UPPER SPRY-ARM SUPPORT	1										
5	12102984	DISTRIBUIDOR ACLARADO EVO	EVO RINSE SPRY-ARM	2										
6	12047863	SOP. DISTRIBUIDOR INFERIOR	LOWER SPRY-ARM SUPPORT	1										
7	12025122	DISTRIBUIDOR MONTADO	ASSEMBLED DISTRIBUTOR	2										
8	12110631	ENGANCHE DISTRIBUIDOR LATON	LATON DISTRIBUTOR HOOK	2										
9	12024289	AMARRE ENGANCHE DISTRIBUI	DISTRIBUTOR HOOK FASTENING	2										
10	12041629	PROTECTOR FUGAS	LEAKAGE PROTECTOR	2										
13	12041628	PROTECTOR FUGAS ACLARADO	RINSE LEAKAGE PROTECTOR	4										
14	12043422	EJE ACLARADO	RINSE SHAFT	2										
15	12043288	TUERCA ESPECIAL	SPECIAL NUT	2										
16	12043289	EJE LAVADO FRONTAL ADVANCE	WASHING SHAFT FRONT LOADING	2										
17	12047847	AMARRE SOPORTE DISTR. INFERIOR	LOW. DISTRIB. SUPPORT FASTENING	1										
19	12049055	JUNTA TORICA Ø50,39 x 3,53	O-RING Ø50,39 x 3,53	1										
20	12049052	JUNTA 53,57x3,53 SOP DISTRI INFE	O-RING Ø53,57 x 3,53 LOW. DISTRIB.	1										
21	12041930	ARBOL LAVADO	WASHING TREE	1										
22	12103942	CODO IMPULSION ADVANCE	EXPULSION ELBOW ADVANCE	1										
23	12041927	COD ASPIRACION ADVANCE	SUCTION ELBOW ADVANCE	1										
24	12024531	INYECTOR DETERGENTE INOX	DETERGENT INJECTOR	1										
26	12024216	DOSIFIC. DGTE REGULABLE G300	REGUL. DETERG. DISPENSER G300	1							X			
27	12024139	CONDUCTO ASPIRACIÓN AZKOY CO	AZKOY SUCTION PIPE	1										
28	12024353	PESO FILTRO	FILTER'S WEIGHT	1										
29	11000079	CONDUCTO DOSIF. TRANSP 6X4	DISPENSER TRANSPARENT PIPE	1										
30	12009962	ABRAZADERA 40-60	40-60 CLAMP	3										
31	12009933	ABRAZADERA 50-70L	50-70L CLAMP	1										
32	12009986	ABRAZADERA 32-50L	32-50L CLAMP	2										
33	12023707	BRIDA ELASTICA TUBO	ELASTIC CLAMP FOR PIPES	1										
34	12041531	AMARRE SOPORTE DISTR. SUPERI.	UPPER DISTRIB. SUPPORT FASTEN.	1										
35	12115944	CALZO EJE LAVADO	WASHING SHAFT SHIM	1										

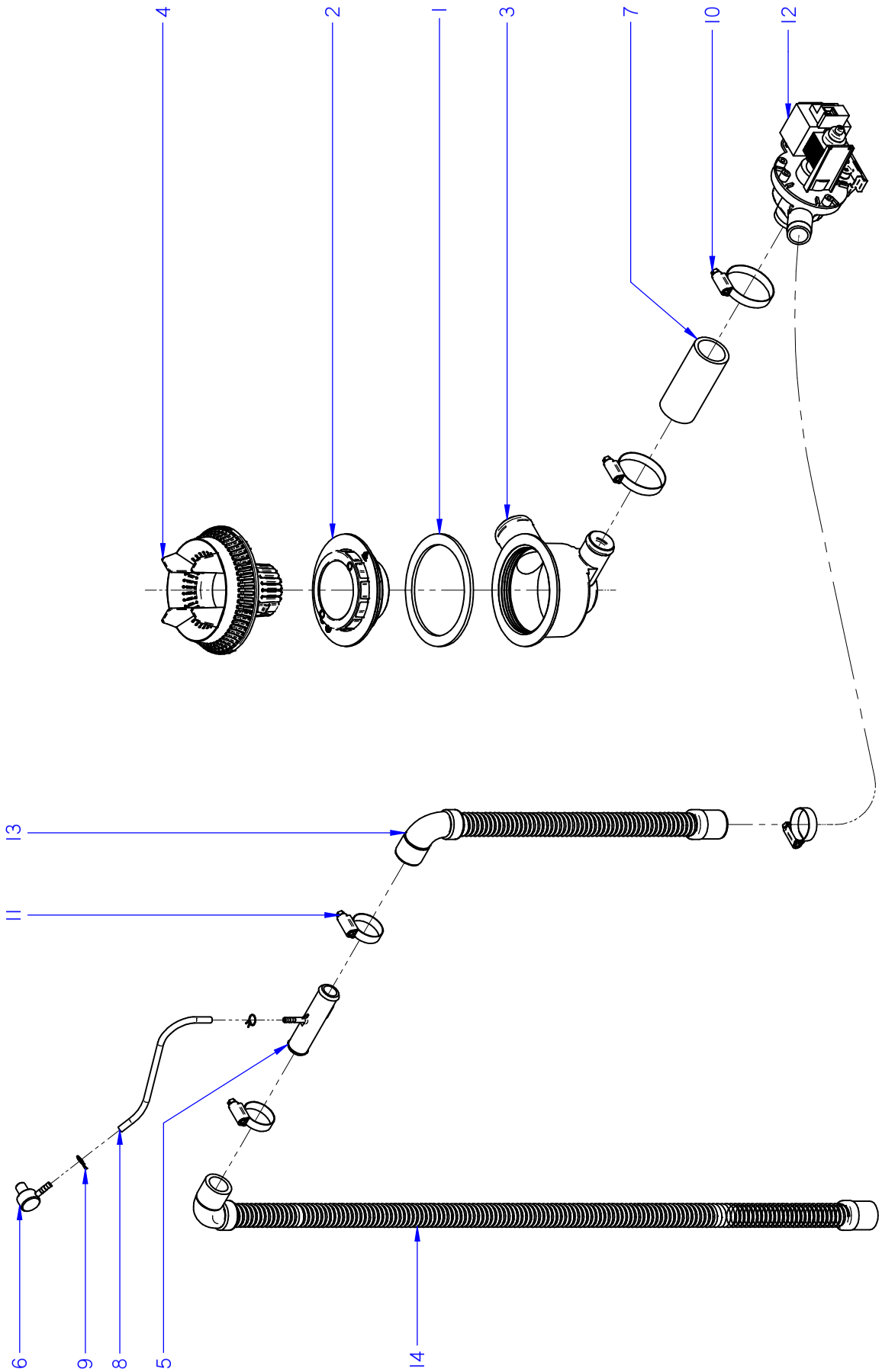

ITEM MARCADO EN COLOR = REPUESTO RECOMENDADO
COLOURED ITEM = RECOMMENDED SPARE PART

N plano / Drawing N.	Firma / Signature	Fecha / Date	Aparato / Appliance	Lamina / Sheet	
C-3282	Iban R.	2014-09	DESAGÜE / DRAINING PART LAVAVAJILLAS AD-505 DISHWASHER	3	Fagor Industrial S.Coop. FAGOR Onate

ZONA / ZONE	DESAGÜE / DRAIN	LÁMINA / DRAWING	C-3282	FAGOR

ITEM	REFERENCIA REFERENCE	DENOMINACIÓN	DENOMINATION	AD-505							RECOMMENDED	ELIMINADO ELIMINATED	INTRODUCIDO INTRODUCED	NOTAS / NOTES
1	12041925	JUNTA Ø110xØ89x3.5	Ø110xØ89x3.5 SEAL	1										
2	12041600	AMARRE CUBETA A.F. ADVANCE	FRONT LOADING PAIL FASTENING	1										
3	12041533	CUBETA A.F. ADVANCE	FRONT LOADING PAIL ADVANCE	1										
4	12048712	BASE FILTRO AF ADVANCE	FRONT LOADING FILTER BASE	1										
5	12041519	EMPALME DESAGÜE	DRAINING JOINT	1										
6	12024531	INYECTOR DETERGENTE INOX	DETERGENT INJECTOR	1										
7	12041924	Conducto cubeta-bomba desague	PAIL - DRAINING PUMP PIPE	1										
8	11000148	CONDUCTO AZUL Ø4xØ6	BLUE PIPE Ø4xØ6	1										
9	12023707	BRIDA ELASTICA TUBO	ELASTIC CLAMP FOR PIPES	2										
10	12009986	ABRAZADERA 32-50L	32-50L CLAMP	2										
11	12010023	ABRAZADERA 20-32	20-32 CLAMP	3										
12	12094265	BOMBA 220V AC 1N 50/60Hz 30W	220V AC 1N 50/60Hz 30W PUMP	1							X			
13	12041936	MANGUERA DESAGÜE	DRAINING PIPE	1										
14	12041934	MANGUERA DESAGÜE	DRAINING PIPE	1										

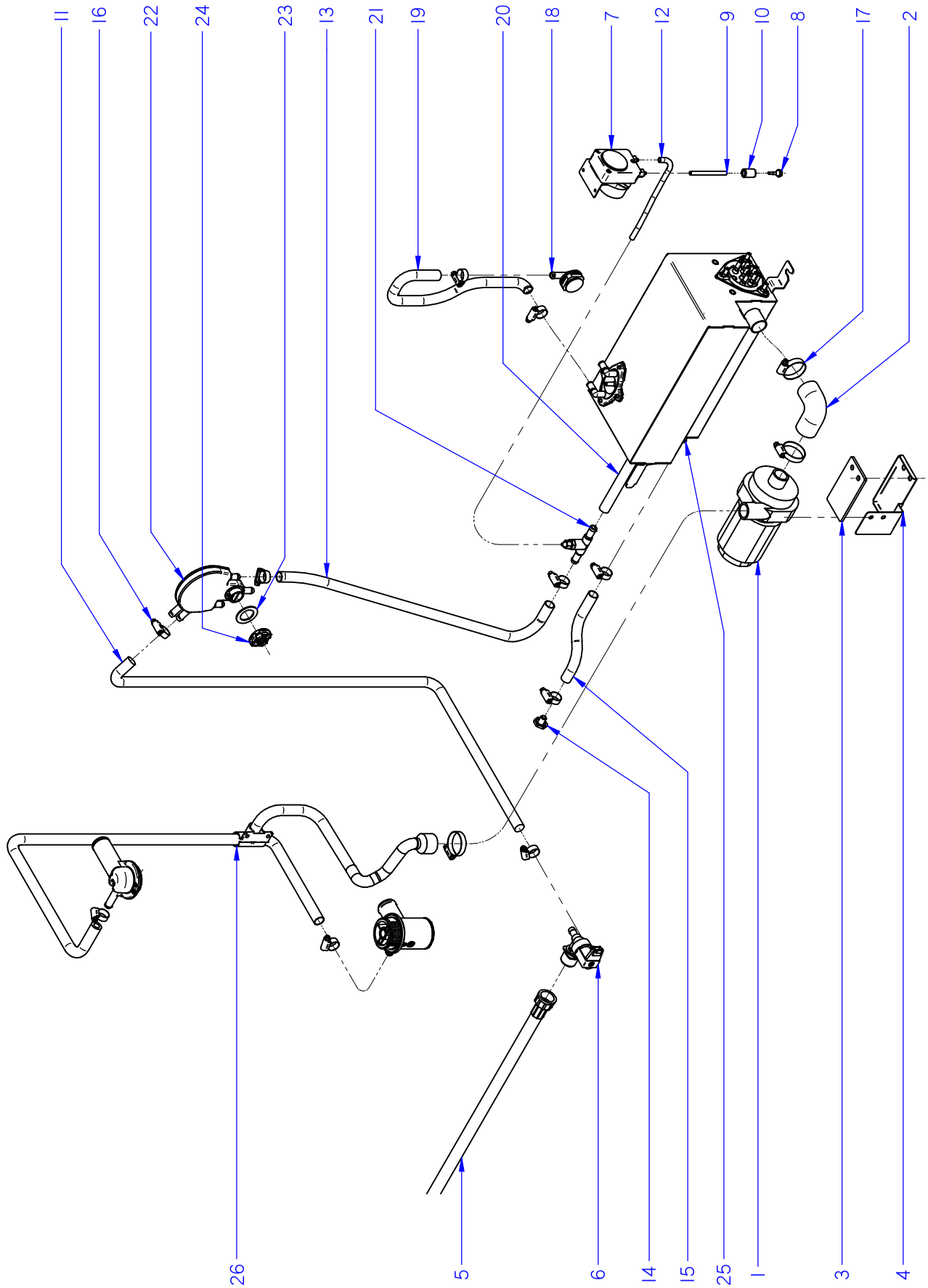

ITEM MARCADO EN COLOR = REPUESTO RECOMENDADO
COLOURED ITEM = RECOMMENDED SPARE PART

N plano / Drawing N.	Firma / Signature	Fecha / Date	Aparato / Appliance	Lamina / Sheet	
C-3283	Iban R.	2014-09	ACLARADO / RINSING PART LAVAVAJILLAS AD-505 DISHWASHER	4	Fagor Industrial S.Coop. FAGOR Onate

ZONA / ZONE	PARTE FUNCIONAL ACLARADO / FUNCTIONAL RINSE PART	LÁMINA / DRAWING	C-3283	FAGOR

ITEM	REFERENCIA REFERENCE	DENOMINACIÓN	DENOMINATION	AD-505							RECOMMENDED	ELIMINADO ELIMINATED	INTRODUCIDO INTRODUCED	NOTAS / NOTES
1	12024233	BOMBA ACLARADO HANNING	HANNING RINSING PUMP	1							X			
2	12041928	CONDUCTO CALDERIN-BOMBA	BOILER-PUMP HOSE	1										
3	12096458	BASE GOMA BOMBA ACLARADO	RINSING PUMP RUBBER BASE	1										
4	12097341	SOPORTE BOMBA ACLARADO AF	RINSING PUMP'S SUPPORT	1										
5	12024115	MANGUERA ENTRADA AGUA	WATER SUPPLY HOSE	1										
6	12095427	E.V SIMPLE 220V SALIDA A 90º	SIMPLE E.V 90º EXIT	1							X			
7	12092198	DOSIFICADOR ABRILLANTADOR	RINSE DISPENSER	1							X			
8	12011355	FILTRO ASPIRACION	SUCTION FILTER	1										
9	12024139	CONDUCTO ASPIRACIÓN AZKOY	AZKOY SUCTION PIPE	1										
10	12024353	PESO FILTRO	FILTER WEIGHT	1										
11	12114353	TUBO E.V-AIRBREAK WRAS	EL.VALVE-AIRBREAK PIPE WRAS	1										
12	11000079	CONDUCTO DOSIF. TRANSP 6X4	DISPENSER TRANSPARENT PIPE	1										
13	11000083	TUBO GOMA NEGRA D 17x10	BLACK RUBBER PIPE D 17x10	1										
14	12041528	TAPON M10x1.5	M10x1.5 CAP	1										
15	11000083	TUBO GOMA NEGRA D 17x10	BLACK RUBBER PIPE D 17x10	1										
16	12010036	ABRAZADERA 12-20	12-20 CLAMP	10										
17	12009997	ABRAZADERA 25-40	25-40 CLAMP	3										
18	12097453	CONDUCTO AIREACION CALDERIN	BOILER VENTILATION ELBOW	1										
19	11000083	TUBO GOMA NEGRA D 17x10	BLACK RUBBER PIPE D 17x10	1										
20	11000083	TUBO GOMA NEGRA D 17x10	BLACK RUBBER PIPE D 17x10	1										
21	12040714	RACOR EN T ANTIRRETORNO	T FITTING NON-RETURN	1										
22	12091121	AIR BREAK	AIR BREAK	1							X			
23	12091122	JUNTA AIR BREAK	AIR BREAK'S SEAL	1										
24	12104339	TUERCA AIR BREAK	AIR BREAK'S NUT	1										
25	12118972	CALDERIN RECTANGULAR	SQUARE BOILER	1										
26	12091150	CONDUCTO_ACLARADO_COMPLETO	COMPLETE RINSING PIPE	1										

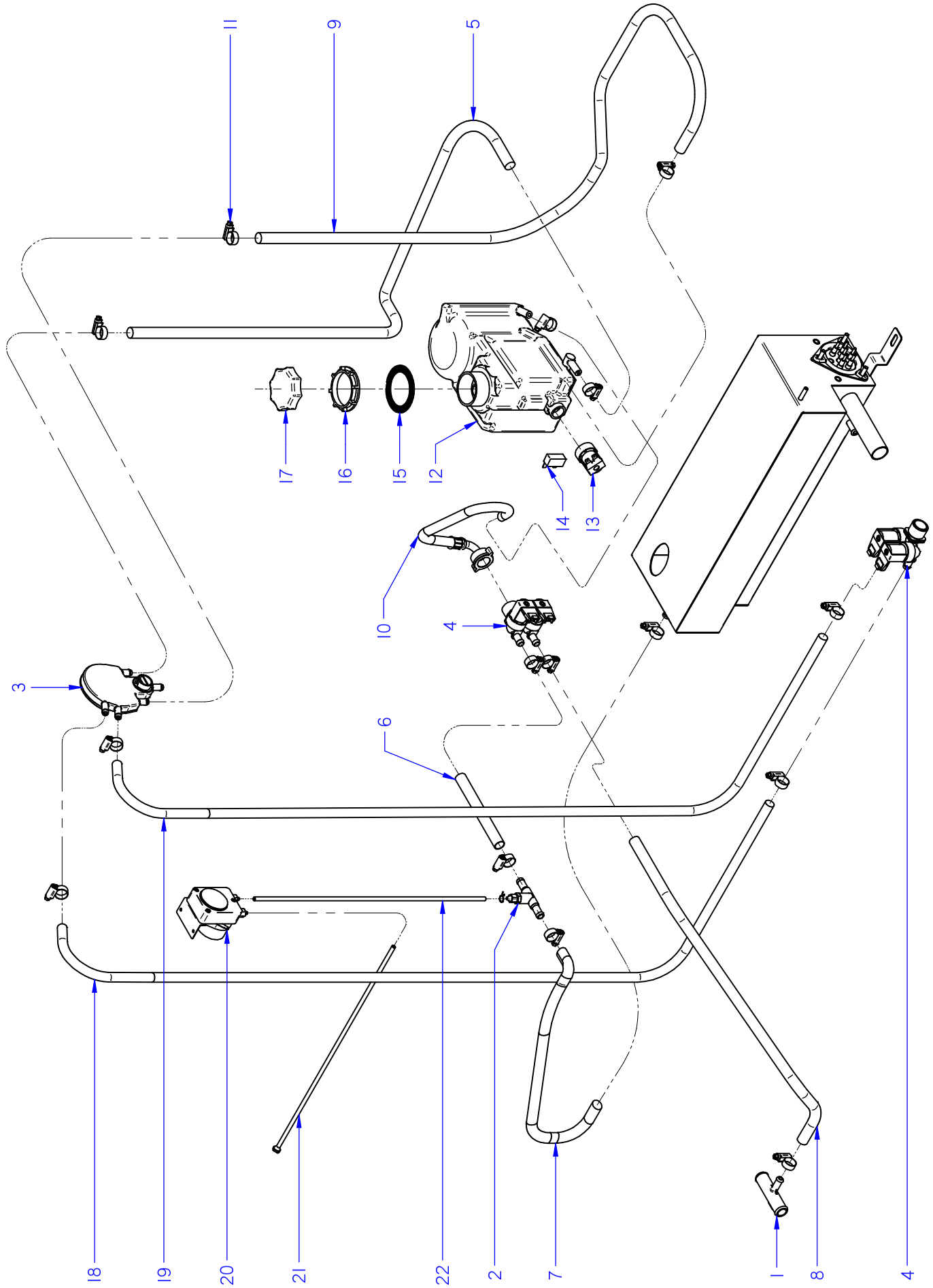

ITEM MARCADO EN COLOR = REPUESTO RECOMENDADO
COLOURED ITEM = RECOMMENDED SPARE PART

N plano / Drawing N.	Firma / Signature	Fecha / Date	Aparato / Appliance	Lamina
C-3284	Iban R.	2014-11	DESCALCIFICADOR / SOFTENER LAVAVAJILLAS AD-505 SOFT DISHWASHER	5

Fagor Industrial S.Coop. FAGOR
Oñate

ZONA / ZONE	PARTE FUNCIONAL ACLARADO / FUNCTIONAL RINSE PART	LÁMINA / DRAWING	C-3284	FAGOR

ITEM	REFERENCIA REFERENCE	DENOMINACIÓN	DENOMINATION	AD-505 SOFT							RECOMMENDED	ELIMINADO ELIMINATED	INTRODUCIDO INTRODUCED	NOTAS / NOTES
1	12041520	EMPALME DESCALCIF.- DESAGÜE	SOFTENER-DRAIN JOINT	1										
2	12040714	RACOR EN T ANTIRRETORNO	T FITTING NON-RETURN	1										
3	12091121	AIR BREAK	AIR BREAK	1							X			
4	12110531	E.V.DOBLE 220/240V 50/60Hz	DOUBLE EV 220/240V 50/60Hz	2							X			
5	12114353	TUBO WRAS	WRAS PIPE	1										
6	11000083	TUBO GOMA NEGRA D 17x10	D 17x10 BLACK RUBBER PIPE	1										
7	11000083	TUBO GOMA NEGRA D 17x10	D 17x10 BLACK RUBBER PIPE	1										
8	11000083	TUBO GOMA NEGRA D 17x10	D 17x10 BLACK RUBBER PIPE	1										
9	12114353	TUBO WRAS	WRAS PIPE	1										
10	12115441	MANGUERA DESCALCIF.- EV. DOBLE	SOFTENER_DOUBLE EV PIPE	1										
11	12010036	ABRAZADERA 12-20	12-20 CLAMP	15										
12	12044603	DESCALCIFICADOR COMPLETO	COMPLETE SOFTENER	1							X			
13	12044600	MEDIA ELECTROVÁLVULA	HALF ELECTROVALVE	1										
14	12044602	INTERRUPTOR SAL	SALT REED	1										
15	12045142	JUNTA DESCALCIFICADOR Ø74xØ54	SOFTENER SEAL Ø74xØ54	1										
16	12045143	AMARRE JUNTA DESCALCIFICADOR	SOFTENER SEAL FASTENER	1										
17	12045145	TAPÓN DESCALCIFICADOR	SOFTENER TAP	1										
18	12114353	TUBO WRAS	WRAS PIPE	1										
19	12114353	TUBO WRAS	WRAS PIPE	1										
20	12092198	DOSIFICADOR ABRILLANTADOR	RINSE DISPENSER	1										
21	12024139	CONDUCTO ASPIRACIÓN AZKOY	AZKOY SUCTION PIPE	1										
22	11000079	CONDUCTO DOSIF. TRANSP 6X4	DISPENSER TRANSPARENT PIPE	1										

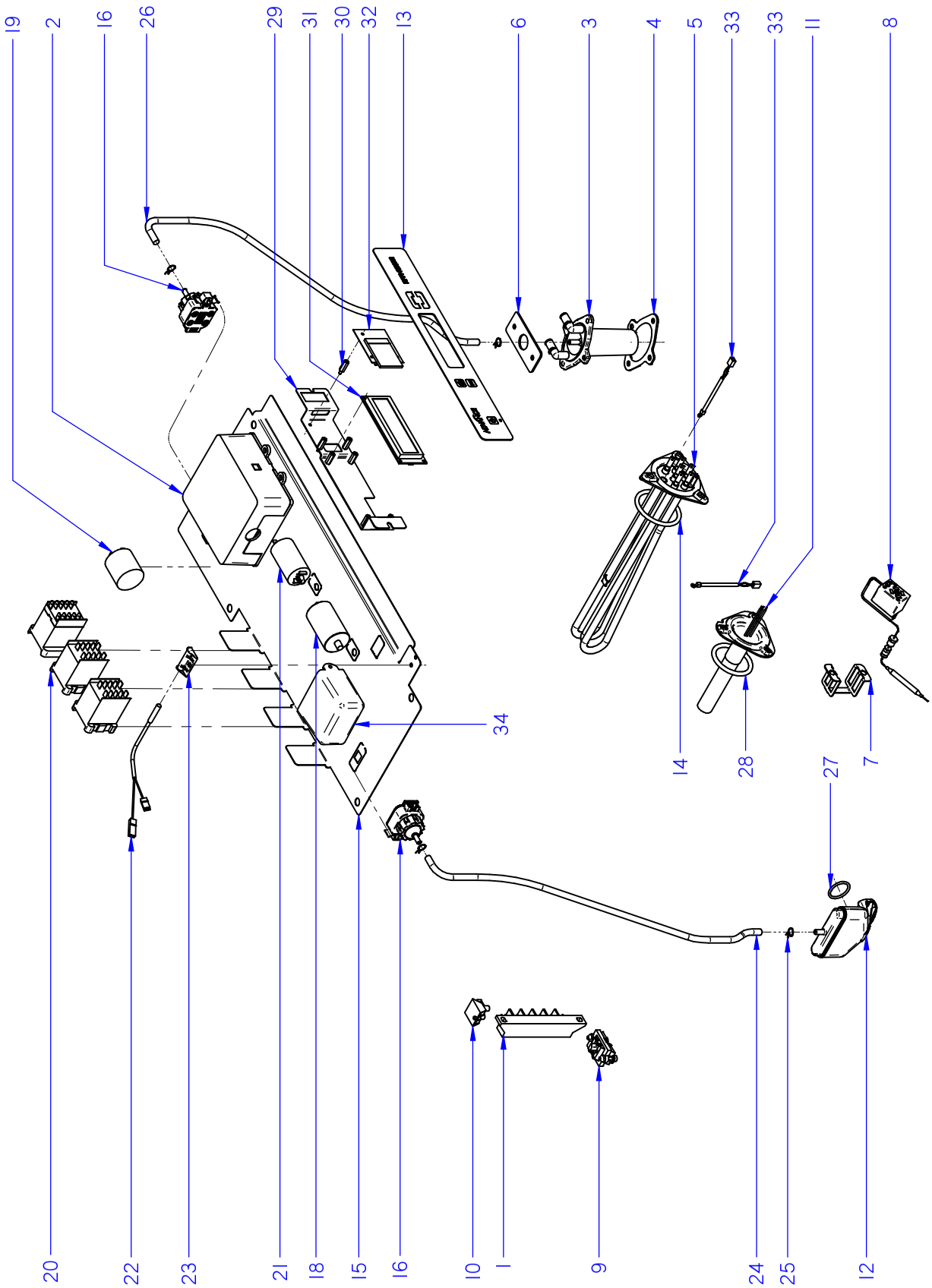

ITEM MARCADO EN COLOR = REPUESTO RECOMENDADO
COLOURED ITEM = RECOMMENDED SPARE PART

N plano / Drawing N.	Firma / Signature	Fecha / Date	Aparato / Appliance	Lamina / Sheet	
C-3285	Iban R.	2014-09	CONJUNTO ELECTRICO / ELECTRICAL PART LAVAVAJILLAS AD-505 DISHWASHER	6	Fagor Industrial S.Coop. FAGOR Onate

ZONA / ZONE	CONJUNTO ELECTRICO / ELECTRICAL PART	LÁMINA / DRAWING	C-3285	FAGOR

ITEM	REFERENCIA REFERENCE	DENOMINACIÓN	DENOMINATION	AD-505							RECOMMENDED	ELIMINADO ELIMINATED	INTRODUCIDO INTRODUCED	NOTAS / NOTES
1	12025183	REGLETA AUXILIAR FV-122	FV-122 AUXILIARY STRIP	1										
2	12048024	CONTROL TARJETA 8 REL. UL	8 RELAY CONTROL CARD UL	1							X			
3	12091478	CAMPANA CALDERIN	BOILER'S PRESSURE CHAMBER	1							X			
4	12118822	JUNTA CAMPANA CALDERIN	BOILER'S P.CHAMBERS SEAL	1										
5	12090551	RESISTENCIA CALDERIN 5,6KW	BOILER'S RESISTOR 5,6KW	1							X			
6	12101852	CHAPA REFUERZA CAMPANA	P. CHAMBER STRENGTHENER	1										
7	12022151	AMARRE LIMITADOR TECASA	TECASA THERMOST. SUPPORT	1										
8	12023830	LIMITADOR TECASA P. 125ºC	TECASA THERMOSTAT 125ºC	1										
9	12024230	RETENEDOR DE CABLE	CABLE RETAINER	1										
10	12024110	REGLETA DE CONEXIONES	CONNECTION STRIP	1										
11	12046952	RESIS. 0,8KW 135MM SIMPLE UL	0,8kW 135MM SIMPLE RESIST	1							X			
12	12093146	CAMPANA TANQUE	TUB'S PRESSURE CHAMBER	1							X			
13	12096763	EMBELLECEDOR ADVANCE	ADVANCE STICKER	1							X			
14	12118319	JUNTA TÓRICA RESIS. CALDERIN	BOILER RESISTOR'S O-RING	1							X			
15	12044604	SOPORTE CUADRO ELECTRICO	ELECTRIC BOARD SUPPORT	1										
16	12042019	PRESOSTATO SIMPLE 2 BAR.	2 BAR PRESSURE SWITCH	2							X			
18	12024376	CONDENSADOR 10MF	10MF CAPACITOR	1							X			
19	12104027	CONDENSADOR PARASIT 1A 0,47µF	PARASITIC CONDENSER 1A 0,47µF	1							X			
20	12024011	CONTACTOR 230 V. 50-60 HZ	230 V. 50-60 HZ CONTACTOR	3							X			
21	12023600	CONDENSADOR 5 µF	5MF CAPACITOR	1							X			
22	12024477	INTERRUPTOR MAGNETICO	MAGNETIC SWITCH	1							X			
23	12024066	AMARRE INTERRUP. MAGNETICO	MAGNETIC SWITCH'S SUPPORT	1										
24	11000066	TUBO GOMA NEGRO D 8x4	D 8x4 BLACK RUBBER PIPE	1										
25	12023707	BRIDA ELASTICA TUBO	ELASTIC CLAMP FOR PIPES	4										
26	11000066	TUBO GOMA NEGRO D 8x4	D 8x4 BLACK RUBBER PIPE	1										
27	12093145	JUNTA TORICA CAMPANA	PRESSURE CHAMBER'S O-RING	1										
28	12102062	JUNTA TÓRICA RESIS. TUBULAR	TUBULAR RESISTOR'S O-RING	1							X			
29	12101686	SOPORTE DISPLAY+BACKLIGHT	DISPLAY+BACKLIGHT SUPPORT	1										
30	12025260	DISTANCIADOR M3	M3 SPACER	7										
31	12048027	VISUALIZADOR 12V DC 32 DIG.	12V DC 32 DIGITS DISPLAY	1							X			
32	12097036	BACKLIGHT	BACKLIGHT	1							X			
33	12025036	CONJUNTO SONDA 64kOHM NTC	64kOHM NTC THERMOSTAT	2										

ZONA / ZONE	CONJUNTO ELECTRICO / ELECTRICAL PART		LÁMINA / DRAWING	C-3285	FAGOR

ITEM	REFERENCIA REFERENCE	DENOMINACIÓN	DENOMINATION	AD-505	AD-505 SOFT						RECOMMENDED	ELIMINADO ELIMINATED	INTRODUCIDO INTRODUCED	NOTAS / NOTES
34	12120189	CONTROL TARJETA 12V DC 6 REL.	6 REALY 12V CONTROL CARD	_	1						X			

ZONA / ZONE	VARIOS / VARIOUS		LÁMINA / DRAWING		FAGOR

ITEM	REFERENCIA REFERENCE	DENOMINACIÓN	DENOMINATION	AD-505	AD-505 SOFT							ELIMINADO ELIMINATED	INTRODUCIDO INTRODUCED	NOTAS / NOTES
	12048030	CABLEADO PARALELO GICAR	PARALLEL WIRING GICAR	2	2									
	12009946	CABLEADO TENSOR	TENSIONER WIRING	1	1									
	12119824	INSTALACIÓN ELÉCTR. EVAD 64	EVAD 64 ELECTRICAL WIRING	1	1									
	12110683	CLIP ANTI-TIRONES CABLEADO	ANTI-PULLING CLIP	2	2									

ZONA / ZONE	RECOMENDADOS / RECOMMENDED	LÁMINA / DRAWING		FAGOR

ITEM	REFERENCIA REFERENCE	DENOMINACIÓN	DENOMINATION	AD-505	AD-505 SOFT							ELIMINADO ELIMINATED	INTRODUCIDO INTRODUCED	NOTAS / NOTES
3	12043287	MOTOBOMBA 590KW 50Hz	WASHIG PUMP 590KW 50Hz	1	1									C-3281
3	12102834	MOTOBOMBA 590KW 60Hz	WASHIG PUMP 590KW 60Hz	1	1									C-3281
26	12024216	DOSIFIC. DGTE REGULABLE G300	REGUL. DETERG. DISPENSER G300	1	1									C-3281
12	12094265	BOMBA 220V AC 1N 50/60Hz 30W	220V AC 1N 50/60Hz 30W PUMP	1	1									C-3282
1	12024233	BOMBA ACLARADO HANNING	HANNING RINSING PUMP	1	1									C-3283
6	12095427	E.V SIMPLE 220V SALIDA A 90º	SIMPLE E.V 90º EXIT	1	_									C-3283
7	12092198	DOSIFICADOR ABRILLANTADOR	RINSE DISPENSER	1	1									C-3283
22	12091121	AIR BREAK	AIR BREAK	1	1									C-3283
4	12110531	E.V.DOBLE 220/240V 50/60Hz	DOUBLE EV 220/240V 50/60Hz	_	2									C-3284
12	12044603	DESCALCIFICADOR COMPLETO	COMPLETE SOFTENER	_	1									C-3284
2	12048024	CONTROL TARJETA 8 REL. UL	8 RELAY CONTROL CARD UL	1	1									C-3285
3	12091478	CAMPANA CALDERIN	BOILER'S PRESSURE CHAMBER	1	1									C-3285
4	12097993	JUNTA CAMPANA CALDERIN	BOILER'S P.CHAMBERS SEAL	1	1									C-3285
5	12090551	RESISTENCIA CALDERIN 5,6KW	BOILER'S RESISTOR 5,6KW	1	1									C-3285
8	12023830	LIMITADOR TECASA P. 125ºC	TECASA THERMOSTAT 125ºC	1	1									C-3285
11	12046952	RESIS. 0,8KW 135MM SIMPLE UL	0,8kW 135MM SIMPLE RESIST	1	1									C-3285
12	12093146	CAMPANA TANQUE	TUB'S PRESSURE CHAMBER	1	1									C-3285
13	12096763	EMBELLECEDOR ADVANCE	ADVANCE STICKER	1	1									C-3285
14	12118319	JUNTA TÓRICA RESIS. CALDERIN	BOILER RESISTOR'S O-RING	1	1									C-3285
16	12042019	PRESOSTATO SIMPLE 2 BAR.	2 BAR PRESSURE SWITCH	2	2									C-3285
18	12024376	CONDENSADOR 10MF	10MF CAPACITOR	1	1									C-3285
19	12104027	CONDENSADOR PARASIT 1A 0,47µF	PARASITIC CONDENSER 1A 0,47µF	1	1									C-3285
20	12024011	CONTACTOR 230 V. 50-60 HZ	230 V. 50-60 HZ CONTACTOR	3	3									C-3285
21	12023600	CONDENSADOR 5 µF	5MF CAPACITOR	1	1									C-3285
22	12024477	INTERRUPTOR MAGNETICO	MAGNETIC SWITCH	1	1									C-3285
28	12102062	JUNTA TÓRICA RESIS. TUBULAR	TUBULAR RESISTOR'S O-RING	1	1									C-3285
31	12048027	VISUALIZADOR 12V DC 32 DIG.	12V DC 32 DIGITS DISPLAY	1	1									C-3285
32	12097036	BACKLIGHT	BACKLIGHT	1	1									C-3285
40	12120189	CONTROL TARJETA 12V DC 6 REL.	6 REALY 12V CONTROL CARD	_	1									C-3285

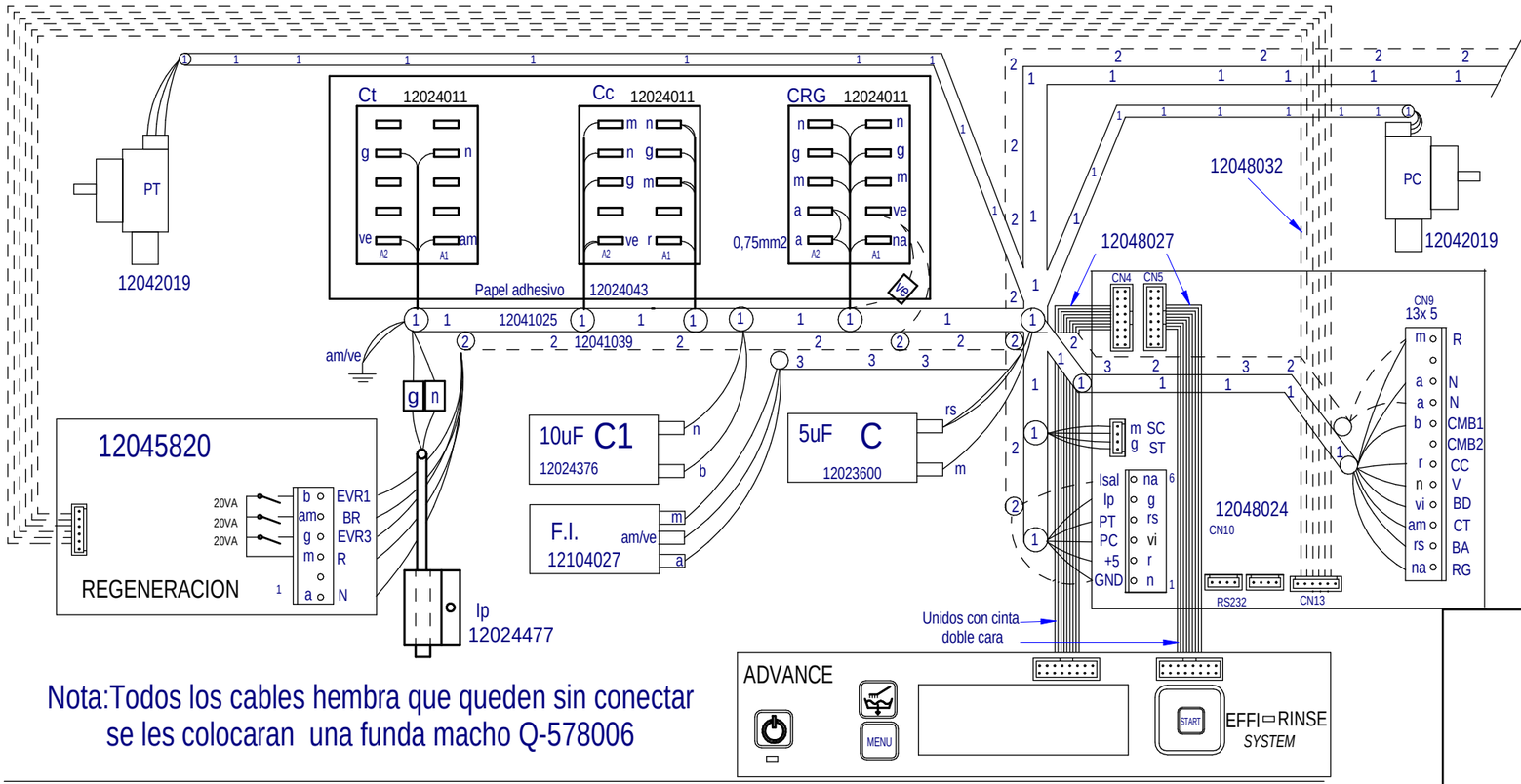

Nota:Todos los cables hembra que queden sin conectar se les colocaran una funda macho Q-578006

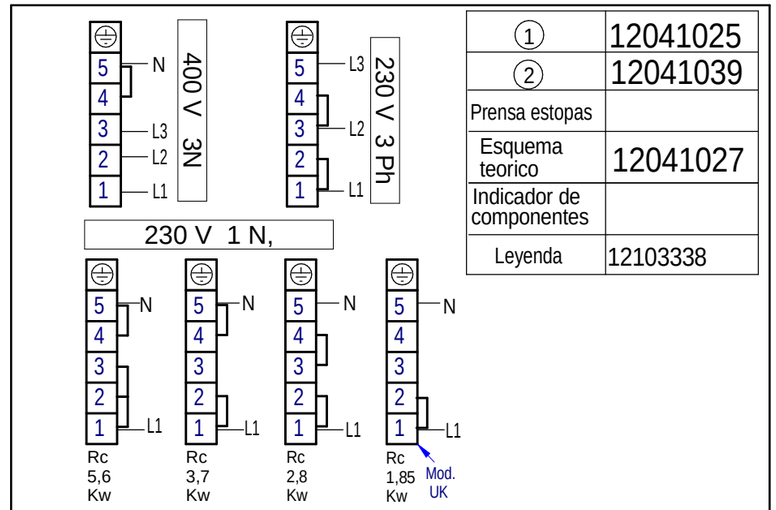

①	12041025
②	12041039
Prensa estopas	
Esquema teorico	12041027
Indicador de componentes	
Leyenda	12103338

ESQUEMA ADHESIVO 12103206
LEYENDA 12103338
INDICADOR DE COMPONENTES 12022162

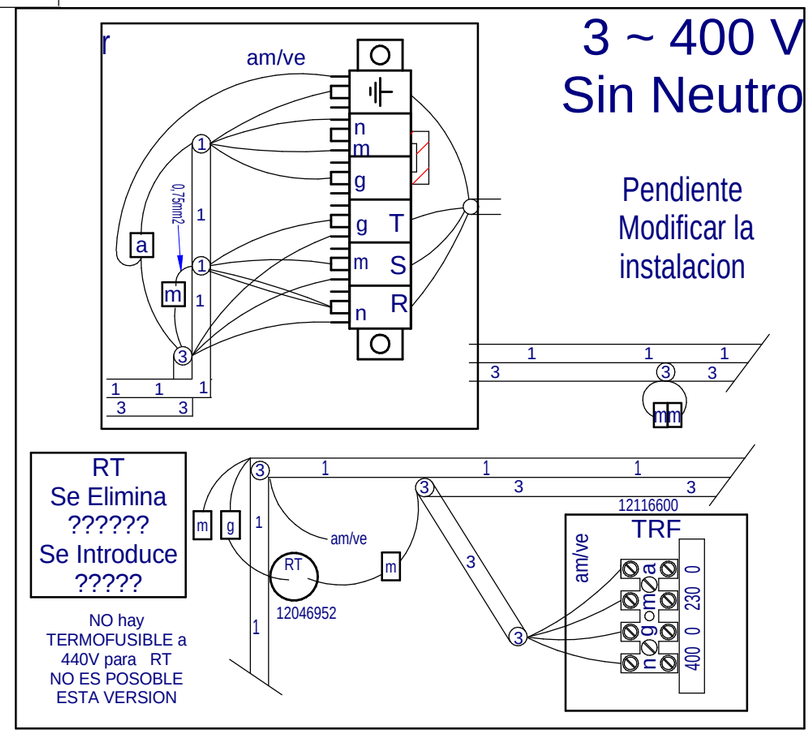

AD 505

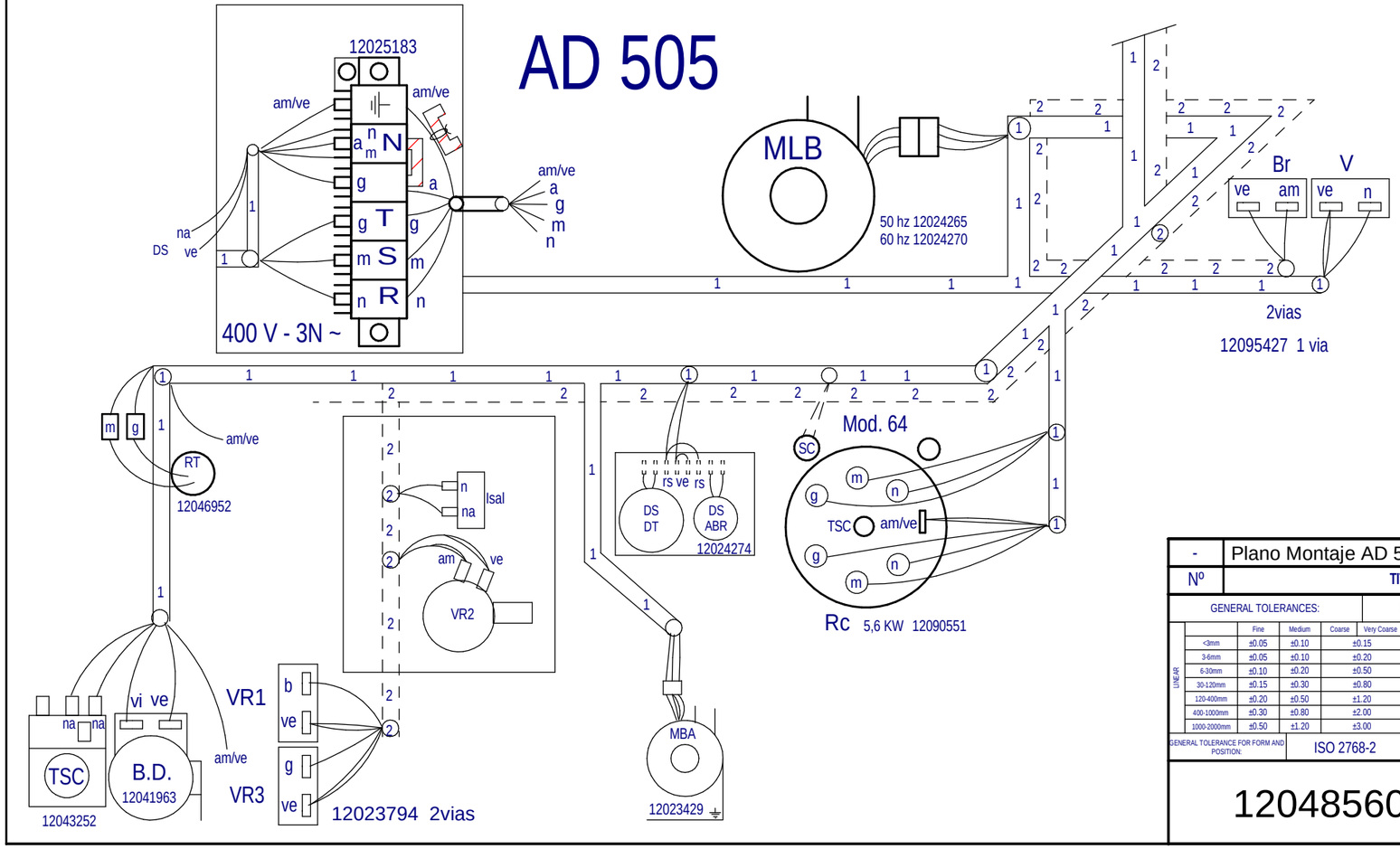

-	Plano Montaje AD 505 (64)	-	12048560		
Nº	TITLE	QTY	CODE	MATERIAL	TREATMENT

GENERAL TOLERANCES: ISO 2768-1 Very Coarse

LINEAR	Fine	Medium	Coarse	Very Coarse
<3mm	±0.05	±0.10	±0.15	
3-6mm	±0.05	±0.10	±0.20	
6-30mm	±0.10	±0.20	±0.50	
30-120mm	±0.15	±0.30	±0.80	
120-400mm	±0.20	±0.50	±1.20	
400-1000mm	±0.30	±0.80	±2.00	
1000-2000mm	±0.50	±1.20	±3.00	

ANGULAR	Fine	Medium	Coarse	Very Coarse
<10mm	±1º	±1º30'	±3º	
10-50mm	±30'	±1º	±2º	
50-120mm	±20'	±30'	±1º	
120-400mm	±10'	±15'	±30'	
>400m	±5'	±10'	±20'	

GENERAL TOLERANCE FOR FORM AND POSITION: ISO 2768-2

LAVAVAJILLAS

FAGOR INDUSTRIAL

DESIGNED BY	VALIDATED BY	DATE
M.MAILLO	X.Iruretagoyena	30.01.2013

SHEET FORMAT:	A3
DESING CENTER:	ONA
MAT STATUS:	
DOC STATUS:	
SHEET:	1 / 1
SCALE:	

12048560

REVISION

PROPOSED BY: ISSUE DATE:

AD 505, 125

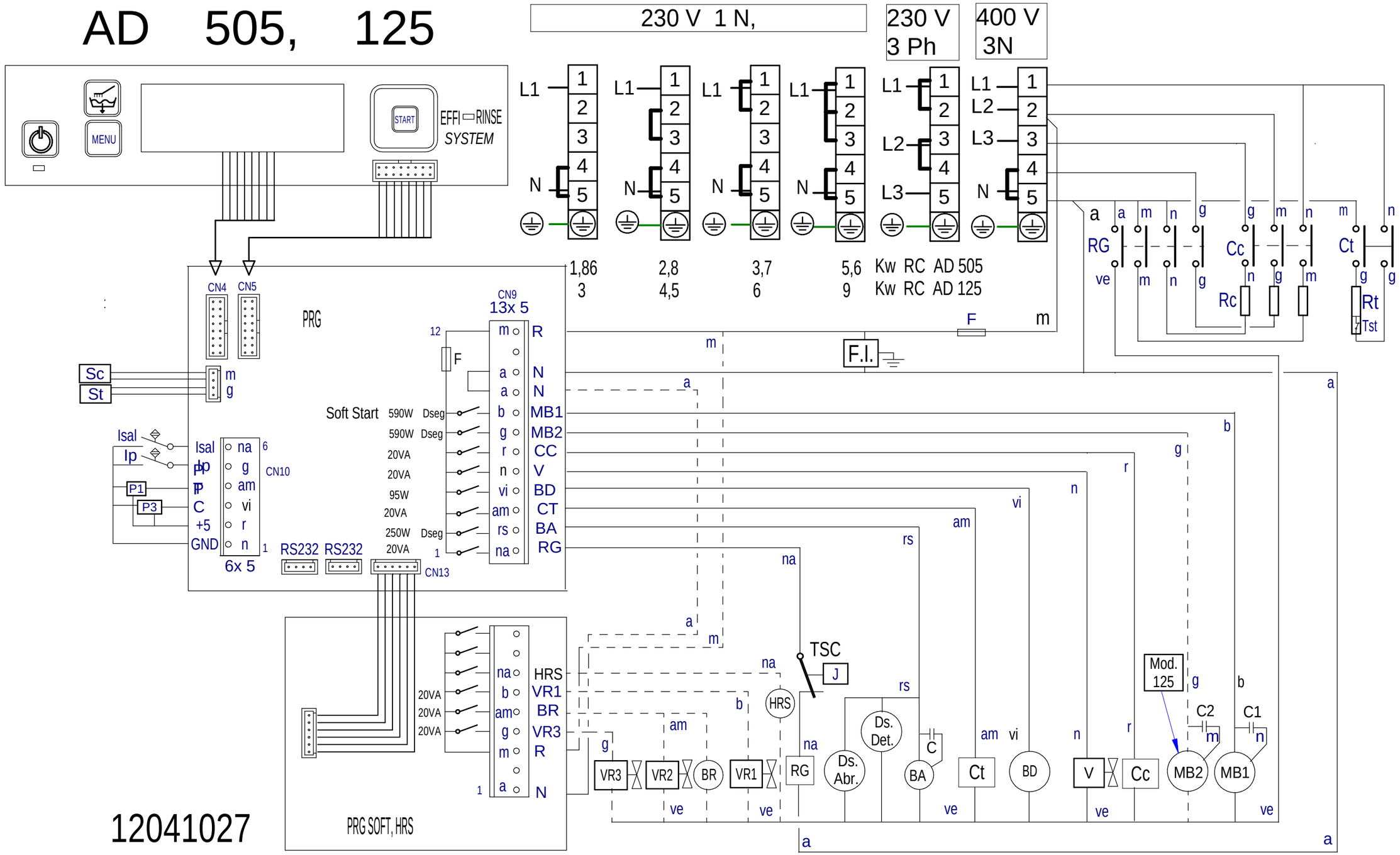

12041027

-	Esquema Teorico AD 505, 125	-	12041027		
Nº	TITLE	QTY	CODE	MATERIAL	TREATMENT

GENERAL TOLERANCES: ISO 2768-1 Very Coarse

LINEAR	Fine	Medium	Coarse	Very Coarse
<3mm	±0.05	±0.10	±0.15	
3-6mm	±0.05	±0.10	±0.20	
6-30mm	±0.10	±0.20	±0.50	
30-120mm	±0.15	±0.30	±0.80	
120-400mm	±0.20	±0.50	±1.20	
400-1000mm	±0.30	±0.80	±2.00	
1000-2000mm	±0.50	±1.20	±3.00	

ANGULAR	Fine	Medium	Coarse	Very Coarse
<10mm	±1º		±1º30'	±3º
10-50mm	±30'		±1º	±2º
50-120mm	±20'		±30'	±1º
120-400mm	±10'		±15'	±30'
>400mm	±5'		±10'	±20'

GENERAL TOLERANCE FOR FORM AND POSITION: ISO 2768-2

LAVAVAJILLAS

FAGOR INDUSTRIAL

DESIGNED BY	VALIDATED BY	DATE
M.MAILLO	X.Iruretagoyena	21.01.2015

SHEET FORMAT:	A3
DESING CENTER:	ONA
MAT STATUS:	
DOC STATUS:	
SHEET:	1 / 1
SCALE:	

12041027

REVISION

PROPOSED BY: M.MAILLO ISSUE DATE:

LEYENDA APERTURA FRONTAL Y CAPOTA

	ESPAÑOL	ENGLISH	FRANÇAIS	DEUTSCH	ITALIANO	中文
Ⓐ Ⓑ	Puntos de conexion con R	Conecction point with R	Points de conexion R	Anschlußpunkte mit R	Punti di collegamento con R	带R接触点
BA	Bomba Aclarado	Rinse pump				
BD	Bomba desagüe	Drain pump	Pompe de vidange	Abflußpumpe	Pompa scarico	排水泵
C1, C2, C3	Condensador	Condenser	Condensateur	Kondensator	Condensatore	电容
CMB	Contactor bomba lavado	Wash pump contactor	Contacteur pompe lavage	Türrelais	Contattore pompa lavaggio	清洗泵接触器
Cc	Contactor calentamiento calderin	Boiler heating contactor	Contacteur chauf. surchauffeur	Kontaktschütz Waschpumpe	Contattore riscaldamento boiler	升温箱加热接触器
Ct	Contactor calentamiento tanque	Tank heating contactor	Contacteur chaufage cuve	Kontaktschütz Boilerheizung	Contattore riscaldamento serbatoio	水箱加热接触器
CP	Rele puerta	Door relay	Relais porte	Kontaktschütz Heizung Tank	Rele porta	门继电器
Ds.	Dosificador	Detergent doser	Dosseur	Dosierer Spülmittel	Dosatore detersivo	清洗剂药液泵
E.B	Electrobomba de presion	Electric pressure pump	Electropompe de pression	Elektro-Drucksteigungspumpe	Electropompa pressione	电子压力泵
IG	Interruptor general	Main switch	Interrupteur general	Hauptschalter	Interruttore generale	主开关
IP	Micro puerta	Door microswitch	Micro porte	Mikroschalter Tür	Micro porta	门磁开关
H1	Piloto de encendido	Operation light	Voyant funcionement	Betriebsanzeigelampe	Spia accensione	运行指示灯
H2	Piloto marcha	Start light	Voyant demarrage	Startanzeigelampe	Spia avvio	开始指示灯
H3	Piloto maquina preparada	Light machine ready	Voyant machine prêt	Betriebsbereitschaftsanzeigelampe	Pilota macchina preparata	加热完成 指示灯
HSal	Piloto falta de Sal	Light Lack of Salt				
MB1, MB2	Bomba lavado	Wash pump	Pompe lavage	Waschpumpe	Pompa lavaggio	清洗泵
M	Motor programador	Motor programmer	Moteur du programmateur	Motor Programmiervorrichtung	Motore programmatore	程序电机
M Av. R	Motor program. avance rapido	Motor program. rapid advance	Moteur du progr.avance rapide	Motor Programmiervorrich. Betrieb	Motore programmatore avanzamento rapido	程序电机. 高速高级
M1	Micro programador marcha	Micro programmer on	Micro du programm. de marche	Motor Programmiervorrich. Waschen	Micro programma. di funzionamento	微程序 开
M2	Micro programador lavado	Micro programmer wash	Micro du programm. de lavage	Motor Programmiervorrich. Spülen	Micro programmatore di lavaggio	微程序 清洗
M3	Micro programador aclarado	Micro programmer rinse	Micro du programm. de rinçage	Motor Programmiervorrich. Vorlauf	Micro programmatore di risciacquo	微程序 喷淋
M4, M5	Micro programador avance	Micro programmer advance	Micro du programm. avance	Motor Programmiervorrich. schneller Vorlauf	Micro programmatore avanzamento	微程序 高级
P1, P3	Presostato	Pressure switch	Pressostat	Druckwächter	Pressostato	压力开关
P2	Presostato limitador	Hi-limit pressure switch	Pressostat de securité	Begrenzer Druckwächter	Pressostato limitatore	高水位限制 压力开关
R	Rele de Generador de A.C.	Generator relay	Relais du Generateur	Relais Generator	Rele Generatore	热水供应器继电器
RG	Rele General	Main Relay		Stromversorgungsanschluß Gener.		
Ⓛ1 Ⓛ2 Ⓛ3 Ⓝ	Alimentac. Generador A.C.	Water heater feeding	Alimentation generateur		Alimentazione generatore	热水供应器电源线
RC	Resistencia calderin	Boiler heating element	Resistance surchauffeur	Heizwiderstand Boiler	Resistenza boiler	升温箱加热管
RT	Resistencia tanque	Tank heater	Resistance cuve	Heizwiderstand Tank	Resistenza serbatoio	水箱加热管
Tt	Termostato tanque	Tank thermostat	Thermostat de cuve	Thermostat Tank	Termostato serbatoio	水箱温控器
TC	Termostato calderin	Boiler thermostat	Thermostat surchauffeur	Thermostat kessel	Termostato boiler	升温箱温控器
Tst	Limitador tanque	Tank limiter	Limitateur de cuve	Begrenzer Tank	Limitatore serbatoio	水箱安全温控器
TSC	Limitador calderin	Boiler Hi-limit	Limiteur surchauffeur	Begrenzer Boiler	Limitatore boiler	升温箱安全温控器
TSTP	Termostato termo-stop	Termo-stop Thermostat	Thermostat Termo-stop	Thermostat Termo-stop	Termostato Termo-stop	温度停止温控器
V	Electrovalvula llenado y aclarado	Fill and rinse valve	Electrovan. remplissage rinçage	Elektroventil Füllen und Spülen	Elettroval. riempimento e risciacquo	电磁阀
Vf	Electrovalvula Aclarado Frio	Cold Water rinse valve				
VR1, VR2, VR3, BR	Electrovalvula Descalcificacion	Soft Water valve				
VE,	Ventilador cuadro electrico	Switchboard fan	Ventilateur tableau electrique	Schalttafelventilator	Ventilatore quadro elettrico	风机
HRS	Sistema recuperacion energia	Heat Recovery System				

COLOR	COLORES	COLOUR	COULEURS	FARBEN	COLORE	颜色
a = BLU =	Azul	Blue	Bleu	Blau	Blu	蓝
am = YEL =	Amarillo	Yellow	Jaune	Gelb	Giallo	黄
am/ve = YEL/GRN	Amarillo/verde	Yellow / green	Jaune / vert	Gelb/grün	Giallo/verde	黄/绿
b = WHT =	Blanco	White	Blanc	Weiß	Bianco	白
g = GRY =	Gris	Grey	Gris	Grau	Grigio	灰
m = BRN =	Marrón	Brown	Marron	Braun	Marrone	棕
n = BLK =	Negro	Black	Noir	Schwarz	Nero	黑
na = ORG =	Naranja	Orange	Orange	Orange	Arancio	橙
r = RED =	Rojo	Red	Rouge	Rot	Rosso	红
rs = PNK =	Rosa	Pink	Rose	Rosa	Roseo	粉
ve = GRN =	Verde	Green	Vert	Grün	Verde	绿
vi = PRP =	Violeta	Purple	Violet	Violett	Viola	紫

12103338