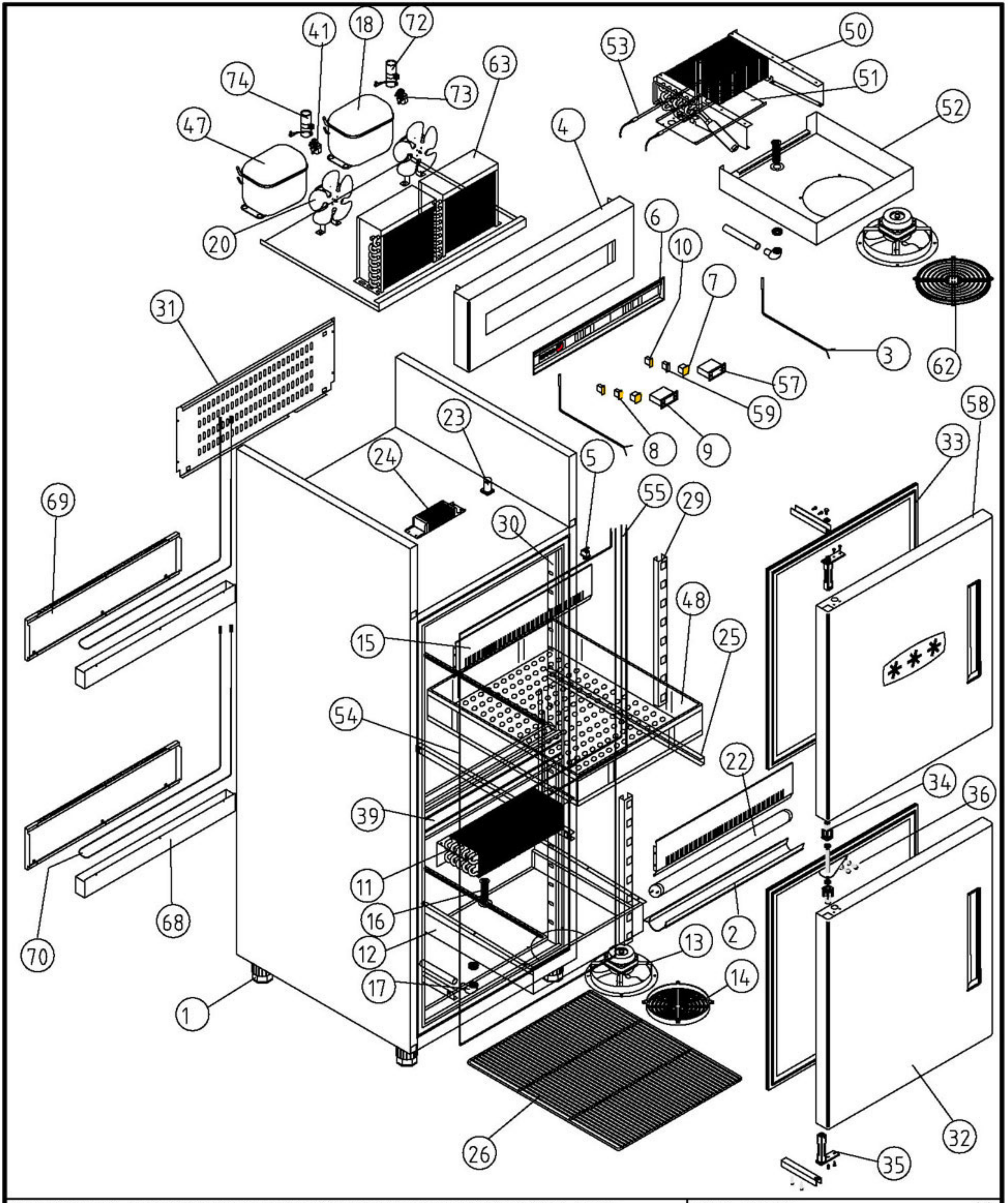


| A1 ARMARIOS GASTRONORM DEPARTAMENTO MANTENIMIENTO CONGELADOS | | | | COD. PIEZA: X |
|---|---|---|---|---|
| COTAS SIN TOLERANCIA **DIN 7168-f** | | | | SUSTITUYE A: . |
| Material: **MATERIAL ESPESOR** | | | | SUSTITUIDO POR: . |
| Acabado: **ACABADO** | | | | |

ANGULAR

| GRADO TOLERANCIA | FINO | MEDIO | GRUESO |
|---|---|---|---|
| HASTA 10 mm | ±1° | | ±1° 30' |
| MAS DE 10 A 50 mm | ±30' | | ±50' |
| MAS DE 50 A 120 mm | ±20' | | ±25' |
| MAS DE 120 A 400 mm | ±10' | | ±15' |
| MAS DE 400 mm | ±5' | | ±10' |

LINEAL

| GRADO TOLERANCIA | FINO | MEDIO | GRUESO |
|---|---|---|---|
| HASTA 3 mm | ±0,05 | ±0,10 | ±0,15 |
| MAS DE 3 A 6 mm | ±0,05 | ±0,10 | ±0,20 |
| MAS DE 6 A 30 mm | ±0,10 | ±0,20 | ±0,50 |
| MAS DE 30 A 120 mm | ±0,15 | ±0,30 | ±0,80 |
| MAS DE 120 A 400 mm | ±0,20 | ±0,50 | ±1,20 |
| MAS DE 400 A 1000 mm | ±0,30 | ±0,80 | ±2,00 |
| MAS DE 1000 A 2000 mm | ±0,50 | ±1,20 | ±3,00 |

COMÚN A

| MODELO | Ud. | MODELO | Ud. | MODELO | Ud. | MODELO | Ud. | MODELO |
|---|---|---|---|---|---|---|---|---|
| AF-802-C | 1 | | | | | | | |
| | | | | | | | | |
| | | | | | | | | |

| A4 | Nombre | Fecha |
|---|---|---|
| Dibujado | G.CH | .31-3-03 |
| Modificado | . | . |

FAGOR
Fagofri, s.a.

| Escala | | Código máquina: |
|---|---|---|
| 1:20 | RECAMBIOS AF-802-C | CODIGO |

**RECAMBIOS**
**ARMARIOS**
revisión 01-03-2003

FAGOR
FAGOFRI S.A.

| Nº | CÓDIGO | DESCRIPCIÓN | MODELOS | AFP-801 | AFP-802 | AFP-802/2 | AF-802-P | AF-802-C | AFN-801 | AFN-802 | AEP-801 | AEP-802 |
|---|---|---|---|---|---|---|---|---|---|---|---|---|
| | | | GASTRO | | | | | | | | | |
| 1 | 6007050017 | PATA REGULABLE ARM.GASTRO | | 4 | 4 | 4 | 4 | 4 | 4 | 4 | 4 | 4 |
| 2 | 6007170105 | PERFIL POLICARBONATO 538 MM | | 1 | 1 | 2 | 1 | 1 | | | 1 | 1 |
| 3 | 6021350013 | SONDA TERMOST.REF NTC 15KOhm | | 1 | 1 | 2 | 2 | 2 | 1 | 1 | 1 | 1 |
| 4 | A109010134 | CABEZA AFP-800 DPTO R7 | | | | 1 | 1 | 1 | | | | |
| 4 | A109010133 | CABEZA AFP-800 R-7 | | 1 | 1 | | | | 1 | 1 | 1 | 1 |
| 5 | 6021130008 | MICRORRUPTOR RECTANGULAR LUCE. | | 1 | 1 | 1 | 1 | 1 | 1 | 1 | 1 | 1 |
| 6 | 6003010105 | CUADRO ABS GRIS | | 1 | 1 | | | | 1 | 1 | 1 | 1 |
| 6 | A103010001 | CUADRO ABS GRIS UNIDO | | | | 1 | 1 | 1 | | | | |
| 7 | 6021130001 | INTERRUPTOR BIPOLAR AMB. ON/OFF | | 1 | 1 | 2 | 2 | 2 | 1 | 1 | 1 | 1 |
| 8 | 6021130002 | INTERRUPTOR UNIPOL.LUMINOS. AMB. | | 1 | 1 | 2 | 1 | 1 | | | 1 | 1 |
| 9 | 6021350015 | TERMOSTATO TERM. REFRIG. ID 961F | | 1 | 1 | 2 | 1 | 1 | | | 1 | 1 |
| 10 | 6021130010 | PILOTO RECTANG.AMBAR SEÑAL LUMIN. | | 1 | 1 | 2 | 2 | 2 | 1 | 1 | 1 | 1 |
| 11 | 6029010038 | BAT.FC71B ARM 7T5R300A6S(PINTA | | | | | | | 1 | 1 | | |
| 11 | 6029010040 | BAT.AFP-800 B8T4R330A4S(PINTADO) | | 1 | 1 | 2 | | 1 | | | 1 | 1 |
| 11 | 6029010042 | BAT.AFP700 5T4R330A4S(PINTADO) | | | | | 1 | | | | | |
| 12 | A109050184 | CAJA SUJ.VENT.AFN-800 | | | | | | | 1 | 1 | | |
| 12 | A109050052 | SUJECC. VENTILADOR 800 | | 1 | 1 | 2 | | 1 | | | 1 | 1 |
| 12 | A109050096 | SUJECC. VENTILADOR 700 | | | | | 1 | | | | | |
| 13 | 6021050013 | VENTILADOR 10W 71B ARMARIOS | | | | | | | 1 | 1 | | |
| 13 | 6021050001 | VENTIL.EVAP.5W ARO/TIRO FORZAD. | | 1 | 1 | 2 | 1 | 1 | | | 1 | 1 |
| 14 | 6027130002 | REJILLA VENT.D.300 PINT Y ZINC | | | | | | | 1 | 1 | | |
| 14 | 6003010035 | REJILLA PROTECCIÓN VENTILADOR | | 1 | 1 | 2 | 1 | 1 | | | 1 | 1 |
| 15 | A109050049 | EMBELLECEDOR FRONT. INT. | | 1 | 1 | 2 | 1 | 2 | 1 | 1 | 1 | 1 |
| 16 | 6003010033 | DESAGÜE 1/2 PULG.CUELLO CORTO | | 1 | 1 | 2 | 1 | 2 | 1 | 1 | 1 | 1 |
| 17 | 6003010175 | CODO PVC MIXTO 90º 20X1/2 | | 1 | 1 | 2 | 1 | 2 | 1 | 1 | 1 | 1 |
| 18 | 6021010001 | COMPR.SC-12-CL R404A | | | | | | 1 | | | | |
| 18 | 6021010002 | COMPR.SC-15-CL R404A | | | | | | | 1 | 1 | | |
| 18 | 6021010007 | COMPRES.FR-8.5-G R134A | | 1 | 1 | | | | | | 1 | 1 |
| 19 | 6029020005 | CONDENSADOR 10x4 TECHO | | | | | | | 1 | 1 | | |
| 19 | 6029020002 | CONDENSADOR 9X2 | | 1 | 1 | | | | | | 1 | 1 |
| 20 | 6021050002 | VENTILADOR 10W PATA PALA 220V | | 1 | 1 | 2 | 2 | 2 | 1 | 1 | 1 | 1 |
| 22 | 6021290001 | TUBO FLUORESCENTE DE 15W | | 1 | 1 | 2 | 1 | 1 | | | 1 | 1 |
| 23 | 6021290009 | CEBADOR 1-22W 220W | | 1 | 1 | 2 | 1 | 1 | | | 1 | 1 |
| 24 | 6021290014 | REACTANCIA 40W 220V | | 1 | 1 | 2 | 1 | 1 | | | 1 | 1 |
| 25 | 6033050016 | GUIA GN L=662 MM | | 6 | 6 | 4 | 2 | 8 | 6 | 6 | 6 | 6 |
| 26 | 6027010009 | PARRILLA GN 2/1 650X530 | | 3 | 3 | 2 | 1 | 1 | 3 | 3 | 3 | 3 |
| 29 | A109050072 | CREMALL. RESP. DTO. | | | | 4 | 4 | 4 | | | | |
| 29 | A109050071 | CREMALL.RESPALDO AFP-GN | | 2 | 2 | | | | 2 | 2 | 2 | 2 |
| 30 | A109050069 | CREMALL.MARCO PUERTA PEQ. | | | 4 | 4 | 4 | 4 | | 4 | | 4 |
| 31 | A179050004 | REJILLA MOTOR 800 | | 1 | 1 | 1 | 1 | 1 | 1 | 1 | 1 | 1 |
| 32 | A169010011 | PUERTA PEQ.AFP 702/802 TIR.ABS | | | 2 | 2 | 2 | 1 | | | | |
| 33 | 6045010013 | BURLETE 636X736 ARM. PUERTA PEQ | | | 2 | 2 | 2 | 2 | | 2 | | 2 |
| 34 | 6003010136 | CAJA ALOJAM.MUELLE GRIS | | | 2 | 2 | 2 | 2 | | 2 | | 2 |
| 35 | 6033010003 | BISAGRA TRS1D DOBLE MUELLE | | 2 | 2 | 2 | 2 | 2 | 2 | 2 | 2 | 2 |
| 36 | A169090002 | BISAGRA PUERT.PEQ.CRIST.IZDA | | | | | | | | | | 1 |
| 36 | A169090001 | BISAGRA PUERTA PEQ.AFP IZDA | | | 1 | 1 | 1 | 1 | | 1 | | |
| 39 | A161130004 | FRONTI HORIZ POST IZDA(RESIST | | | | | | 1 | | 1 | | |
| 39 | A161130002 | FRONTI HORIZ.POSTIZO IZDA | | | 1 | 1 | 1 | | | | | 1 |
| 41 | 6021010025 | RELE ARRANQ. COMPR.FR-8.5G 220V | | 1 | 1 | | | | | | 1 | 1 |
| 41 | 6021010044 | RELE ARRANQ COMPRES. TL-5 G 6000 | | | | 2 | 2 | 1 | | | | |
| 44 | A169010009 | PUERTA CARN AFP700/800 TIR ABS | | 1 | 1 | | | | | | | |
| 45 | 6045010030 | BURLETE 636x1520 MM ARMAR.CARNI | | 1 | | | | | 1 | | 1 | |
| 46 | A109050070 | CREMALL. MARCO PUERTA CARNI | | 2 | | | | | 2 | | 2 | |
| 47 | 6021010003 | COMPR.TL-5-G R134A | | | | 2 | 2 | 1 | | | | |
| 48 | 6003050006 | CUBETA DPTO CONGEL.530X540 | | | | | 3 | 3 | | | | |
| 50 | 6029010041 | EV.DPTO.PESC B14T2R426A6S(PINT | | | | | 1 | | | | | |
| 50 | 6029010036 | BAT.FC61B ARM 6T4R300A6S(PINTA | | | | | | 1 | | | | |
| 51 | A109050048 | BANDEJA GOTEO 800-P | | | | | 1 | | | | | |
| 51 | A109050181 | CUBRERRESIST.EVAP FC-61B-ARMAR | | | | | | 1 | | | | |
| 51 | A109050206 | CUBRERRESIST.EVAP.AFN-800 | | | | | | | 1 | 1 | | |
| 52 | A109050067 | SOP. DUELAS 800-P | | | | | 1 | | | | | |
| 52 | A109050180 | CAJA SUJ.VENT.AP-APP-AFN-700 | | | | | | 1 | | | | |
| 53 | 6021250051 | RESIST.DESES.DEP.PESC.220V425W | | | | | 1 | | | | | |
| 53 | 6021250019 | RESIST.BLIND.FC61-71 350W 1000 | | | | | | 1 | 1 | 1 | | |
| 54 | 6021250009 | RESIST.MARCO EXT.700/800 43W | | | | | | 1 | 1 | 1 | | |
| 55 | 6021250008 | RESIST.FRONTI H.1400-1600 12W | | | | | | 1 | | 1 | | |
| 56 | 6033050012 | GUIA BAJ GN CENT L=613MM Y PES | | | | | 6 | | | | | |
| 57 | 6021350019 | TERMOS.CONGELAC.ID 974 F 220V | | | | | 1 | 1 | 1 | 1 | | |
| 58 | A169010014 | PUERTA PEQ CONGEL.AFP-702/802 | | | | | | 1 | | 2 | | |
| 59 | 6003010074 | TAPETA CIEGA NEGRA TROQ 11 | | | | | 1 | 1 | 1 | 1 | | |
| 60 | A167170002 | PERFIL ALUM.PUERTA 711X779 | | | | | | | | | | 2 |
| 60 | A167170001 | PERFIL ALUM.PUERTA 711X1566 | | | | | | | | | 1 | |
| 61 | 6035130009 | CRISTAL PUERTA 693X624 PEQUEÑA | | | | | | | | | | 2 |
| 61 | 6035130008 | CRIS.PUER 1480X624 CARN.4/15/4 | | | | | | | | | 1 | |
| 62 | 6027130001 | REJILLA VENT.D.246 PINT Y ZINC | | | | | | 1 | | | | |
| 63 | 6029020008 | CONDENSADOR 8X2 REF.C CT82DG | | | | 2 | 2 | 2 | | | | |
| 66 | A169010017 | PUERTA CARN.CONGEL.AFP TIR.ABS | | | | | | | 1 | | | |
| 67 | 6003010003 | TIRADOR NEGRO PUERTA ARMARIO | | | | | | | | | 1 | 2 |
| 68 | A109050018 | BAND.EVAP.AUTOM.AFP,AFN,AP,APP | | 1 | 1 | 2 | 2 | 2 | 1 | 1 | 1 | 1 |
| 69 | A109170041 | CUBRE CANAL GALV 800 | | 1 | 1 | 2 | 2 | 2 | 1 | 1 | 1 | 1 |
| 70 | 6021250006 | RESIST.BANDEJA 1400 41W | | 1 | 1 | 2 | 2 | 2 | 1 | 1 | 1 | 1 |
| 72 | 6021010035 | COND.ARRANQ SC. 117U5017 80microF | | | | | | 1 | 1 | 1 | | |
| 73 | 6021010042 | RELE ARRANQ. COMPR.SC-12 CL 6005 220V | | | | | | 1 | | | | |
| 73 | 6021010043 | RELE ARRANQ. COMPR.SC-15CL 6019 | | | | | | | 1 | 1 | | |
| 74 | 6021010037 | COND.ARRANQ FR. 17U5015 80 microF | | 1 | 1 | | | | | | 1 | 1 |
| 74 | 6021010036 | CONDENS. ARRANQ TL-G 17U5014 60microF | | | | 2 | 2 | 1 | | | | |