SP 105-255

Electronic modular flaker

Spare parts list
Catalogo ricambi
Catalogues pièces détacheés
Ersatzteilenkatalog

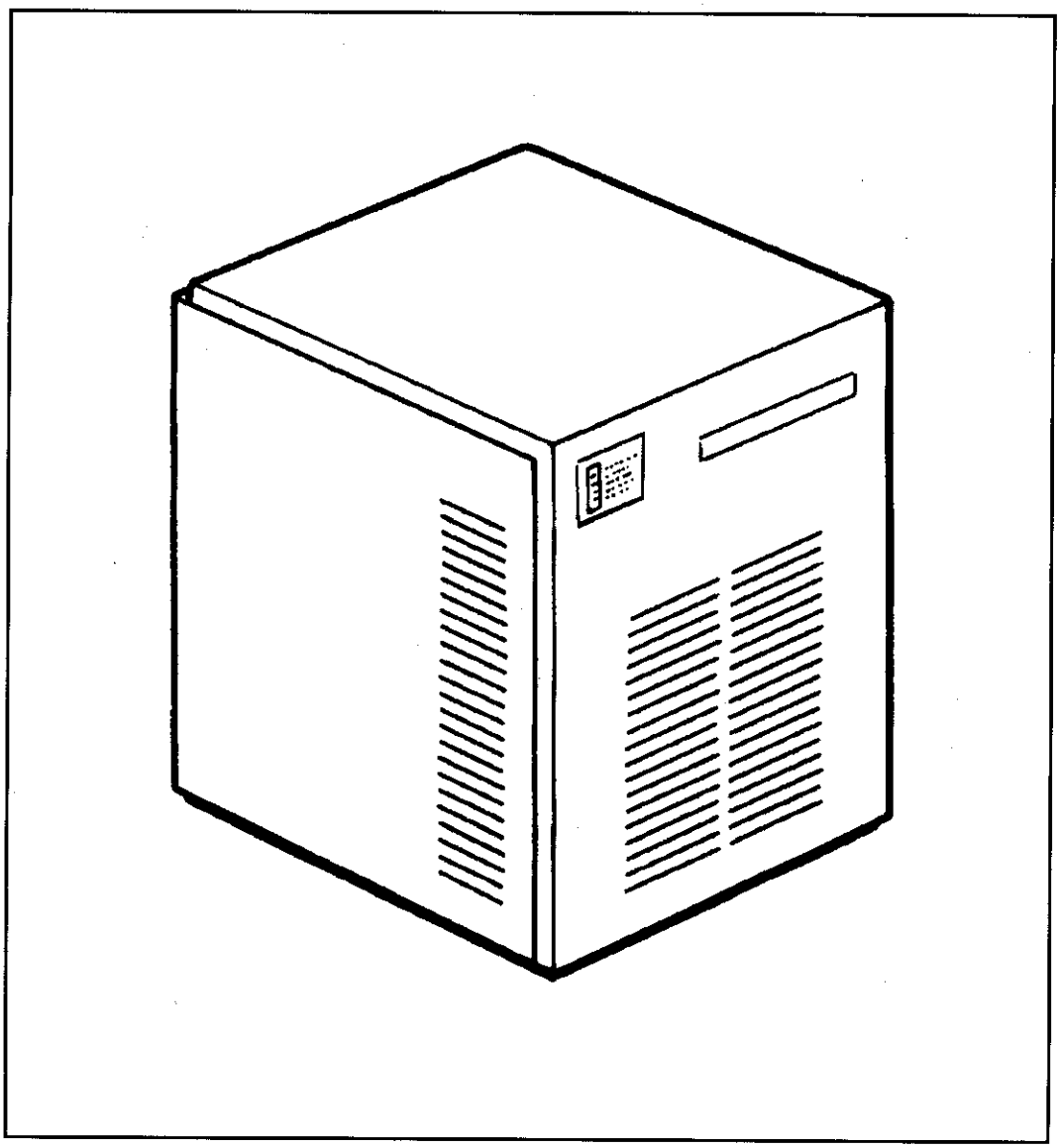

SIMAG

090090.01 REV. 10/93

PAGE PAGINA PAGE SEITE	TABLE OF CONTENTS	INDICE	TABLE DES MATIÉRES	INHALTVERZEICHNIS
1	TABLE OF CONTENTS	INDICE	TABLE DES MATIÉRES	INHALTVERZEICHNIS
2-3	UNIT PANELS	ASSIEME MOBILE	ENS. CARROSSERIE	MACHINENGEHAUSE
4-5	REFRIGERANT SYSTEM AIR COOLED	SISTEMA REFRIGERANTE RAFFR. AD ARIA	CIRCUIT FRIGORIFIQUE REFROID. A AIR	GEFRIERSYSTEM LUFTGEKÜHLT
6-7	REFRIGERANT SYSTEM WATER COOLED	SISTEMA REFRIGERANTE RAFFR. AD ACQUA	CIRCUIT FRIGORIFIQUE REFROID. A EAU	GEFRIERSYSTEM WASSERGEKÜHLT
8-9	WATER SYSTEM AND INSULATIONS	CIRCUITO IDRAULICO ED ISOLAMENTI	CIRCUIT HYDRAULIQUE ET INSULATIONS	WASSERKREISLAUF UND ISOLIERUNGEN
8-9	FREEZER AND GEAR REDUCER ASSY	ASSIEME FREEZER E RIDUTTORE	ENS. FREEZER ET MOTOREDUCTEUR	GEFRIERZYLINDER-GETRIEBEEINHEIT
10-11	P.C. BOARD AND SENSORS ASSY	SCHEDA ELETTRONICA E SENSORI	ENS. CARTE ELECTRONIQUE ET DETECTEURS	ELEKTRONISCHE KARTE UND TEMPERRATURFUEHLERENHEIT
12	COMPRESSOR AND ELECTRIC COMPONENT CHARTS	TABELLA COMPRESSORI E COMPONENTI ELETTRICI	LISTE DES COMPRESSEURS ET COMPOSANTS ELECTRIQUE	KOMPRESSOR UND ELEKTRISCHE BESTANDTEILE

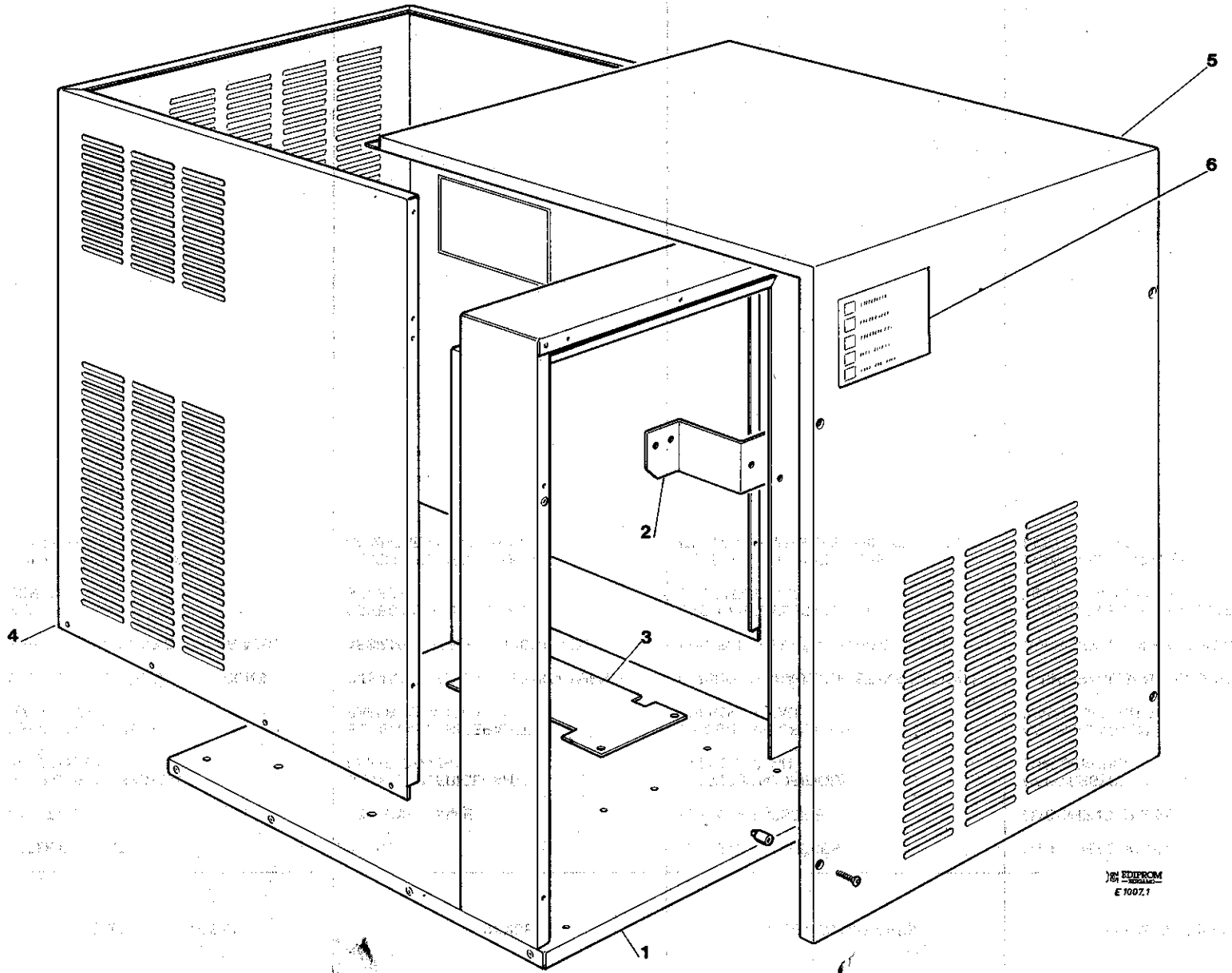
5
6
2
4
3
1
EDITRON
E 1007.1

SP 105 - SP 255 - UNIT PANELS - ASSIEME MOBILE - ENS. CARROSSERIE - MACHINE GEHAUSE

ITEM NO POS NO REP. NO REF. NO	PART NO - CODICE REFERENCE - STUECK NR SP 105	 SP 255	DESCRIPTION	DESCRIZIONE	DESIGNATION	BESCHREIBUNG
1	781399 00	781399 00	FRAME ASSY S.S.	ASSIEME TELAIO ACCIAIO INOX	ENSAMBLE CHASSIS ACIER INOX	CHASSISRAHMEN EDELSTAHL
2	703221 00	703221 00	WATER RESERVOIR BRACKET	SUPPORTO VASCH. GALLEGGIANTE	SUPPORT FLOTTEUR	SCHWIMMERHALTER
3	704256 02	704256 01	GEAR MOTOR BASE	SUPPORTO MOTORIDUTTORE	SUPPORT MOTOREDUCTEUR	GETRIEBEMOTORHALTER
4	721550 00	721550 00	SIDES/REAR PANEL S.S.	PANNELLO LATERALE/POSTER. ACC. INOX	PANNEAU COTE/ARRIERE ACIER INOX	EDELSTAHL SEITEN-RÜCKWAND
5	722149 04	722149 08	FRONT/TOP PANEL S.S.	PANNELLO FRONTALE/SUPER. ACC. INOX	PANNEAU AVANT/SUP. ACIER INOX	EDELSTAHL FRONT-OBERWAND
6	650624 12	650624 12	LABEL	ADESIVO SEGNALETICO	ETIQUETTE	ETIKETT

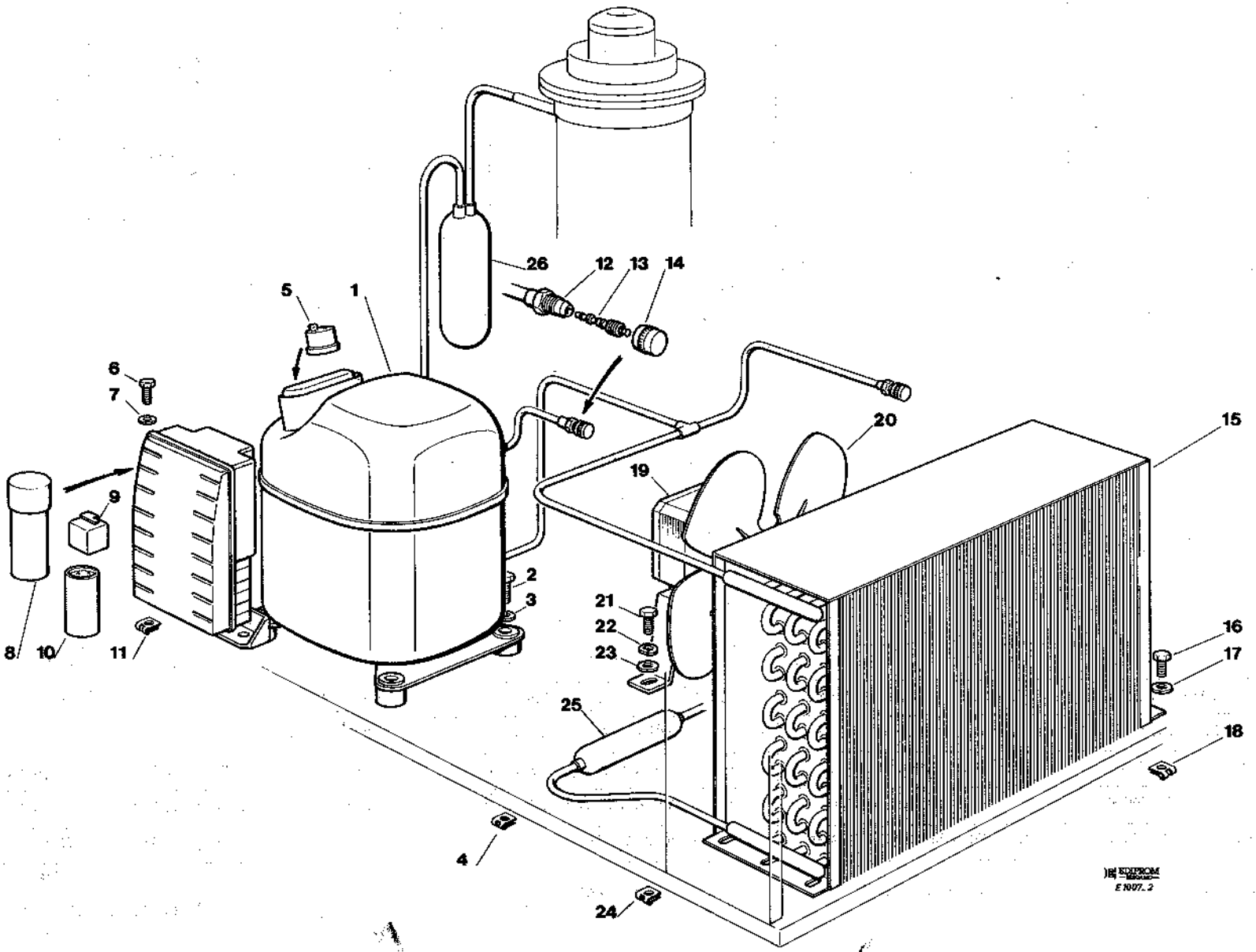
26
12
13
14
5
1
6
7
20
15
19
9
2
3
21
22
23
16
17
8
10
11
25
18
4
24
E 1007.2

SP 105 - SP 255 - REFRIGERANT SYSTEM AIR COOLED - SISTEMA REFRIGERANTE RAFFR. AD ARIA
CIRCUIT FRIGORIFIQUE REFROID. PAR AIR - LUFTGEKÜHLT GEFRIERSYSTEM

ITEM NO POS NO REP. NO REF. NO	PART NO - CODICE REFERENCE - STUECK NR SP 105	 SP 255	DESCRIPTION	DESCRIZIONE	DESIGNATION	BESCHREIBUNG
1	670097 01	670097 03	COMPRESSOR ASSY	ASSIEME COMPRESSORE	ENSAMBLE COMPRESSEUR	KOMPRESSOR
2	420043 00	420043 00	SCREW	VITE	VIS	SCHRAUBE
3	440088 00	440088 00	WASHER	RONDELLA	RONDELLE	SCHEIBE
4	650407 01	650407 01	METAL CLIP	DADO IN GABBIA	ECROU	MUTTER
5	620058 54	620058 59	PROTECTOR	PROTETTORE	PROTECTEUR	SCHUTZGERÄT
6	420000 22	420000 22	SCREW	VITE	VIS	SCHRAUBE
7	440026 00	440026 00	WASHER	RONDELLA	RONDELLE	SCHEIBE
8	*****	620167 28	RUN CAPACITOR	CAPACITA DI MARCIA	CAPACITÉ PERMANENCE	BETRIEB KONDENSATOR
9	620057 32	620168 19	START RELAY	RELE DI AVVIAMENTO	RELAIS DE DEMARRAGE	RELAIS
10	620167 23	620167 27	START CAPACITOR	CAPACITA D'AVVIAMENTO	CAPACITÉ DE DEMARRAGE	START KONDENSATOR
11	650029 03	650029 03	METAL CLIP	DADO IN GABBIA	ECROU	MUTTER
12	650109 00	650109 00	VALVE BODY	CORPO VALVOLA	CORPS DE VANNE	VENTILGEHAUSE
13	670012 00	670012 00	VALVE PISTON	PISTONCINO VALVOLA	PISTON	VENTILKOLBEN
14	650106 00	650106 00	VALVE CAP	CAPPUCCIO VALVOLA	CAPUCHON DE VANNE	VENTILKLAPPE
15	620276 02	620405 00	AIR COOLED CONDENSER	CONDENSATORE AD ARIA	CONDENSEUR A AIR	LUFTGEKUEHLT KONDENSATOR
16	420000 23	420000 23	SCREW	VITE	VIS	SCHRAUBE
17	440084 00	440084 00	WASHER	RONDELLA	RONDELLE	SCHEIBE
18	650029 03	650029 03	METAL CLIP	DADO IN GABBIA	ECROU	MUTTER
19	620003 10	620003 22	FAN MOTOR	MOTORE VENTILATORE	MOTEUR VENTILATEUR	LUFTER MOTOR
20	620007 03	620007 07	FAN BLADE	VENTOLA	HELICE	FLUEGEL
21	420010 00	420010 00	SCREW	VITE	VIS	SCHRAUBE
22	440084 00	440084 00	WASHER	RONDELLA	RONDELLE	SCHEIBE
23	440026 00	440026 00	LOCK WASHER	RONDELLA SPACCATA	RONDELLE	SCHEIBE
24	650029 03	650029 03	METAL CLIP	DADO IN GABBIA	ECROU	MUTTER
25	670003 04	670003 03	DRIER	FILTRO DEUMIDIFICATORE	FILTRE DESHYDRATEUR	TROCKNER
26	784205 02	784406 05	SUCTION LINE/ACCUMULATOR	ACCUMUL. E LINEA ASPIRAZIONE	ENS. ASPIRATION/ACCUMULATEUR	SAMMLER UND SAUGLEITUNGEN

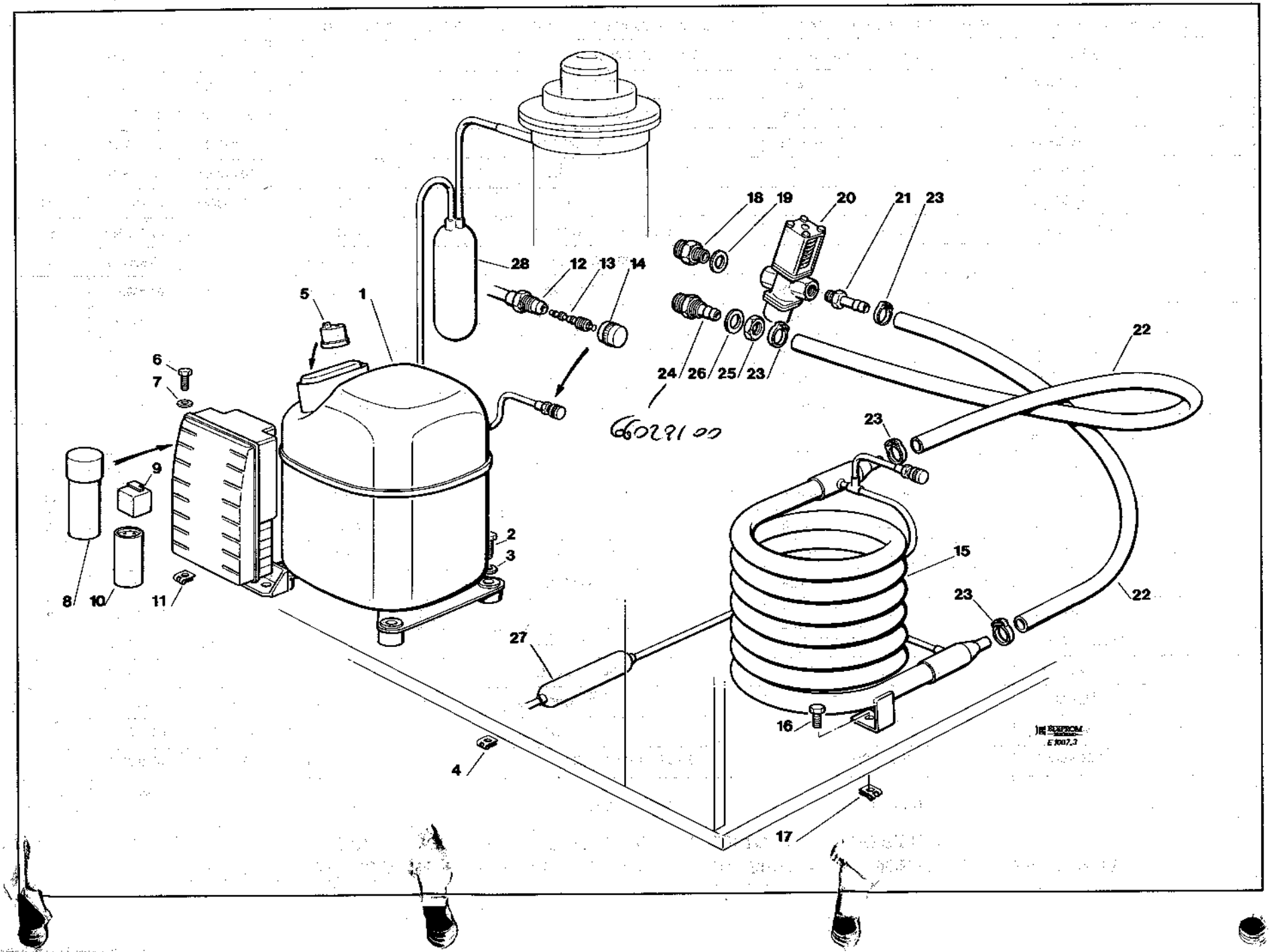
18
19
20
21
23
28
12
13
14
5
1
6
7
24
26
25
23
22
23
9
2
3
15
8
10
11
23
22
27
16
4
17

SP 105 - SP 255 - REFRIGERANT SYSTEM WATER COOLED - SISTEMA REFRIGERANTE RAFFR. AD ACQUA
CIRCUIT FRIGORIFIQUE REFROID. PAR EAU - WASSERGEKÜHLT GEFRIERSYSTEM

ITEM NO POS NO REP. NO REF. NO	PART NO - CODICE REFERENCE - STUECK NR SP 105	 SP 255	DESCRIPTION	DESCRIZIONE	DESIGNATION	BESCHREIBUNG
1	670097 01	670097 03	COMPRESSOR ASSY	ASSIEME COMPRESSORE	ENSAMBLE COMPRESSEUR	KOMPRESSOR
2	420043 00	420043 00	SCREW	VITE	VIS	SCHRAUBE
3	440088 00	440088 00	WASHER	RONDELLA	RONDELLE	SCHEIBE
4	650407 01	650407 01	METAL CLIP	DADO IN GABBIA	ECROU	MUTTER
5	620058 54	620058 59	PROTECTOR	PROTETTORE	PROTECTEUR	SCHUTZGERÄT
6	420000 22	420000 22	SCREW	VITE	VIS	SCHRAUBE
7	440026 00	440026 00	WASHER	RONDELLA	RONDELLE	SCHEIBE
8	*****	620167 28	RUN CAPACITOR	CAPACITA DI MARCIA	CAPACITÉ PERMANENCE	BETRIEB KONDENSATOR
9	620057 32	620168 19	START RELAY	RELE DI AVVIAMENTO	RELAIS DE DEMARRAGE	RELAIS
10	620167 23	620167 27	START CAPACITOR	CAPACITA D'AVVIAMENTO	CAPACITÉ DE DEMARRAGE	START KONDENSATOR
11	650029 03	650029 03	METAL CLIP	DADO IN GABBIA	ECROU	MUTTER
12	650109 00	650109 00	VALVE BODY	CORPO VALVOLA	CORPS DE VANNE	VENTILGEHAUSE
13	670012 00	670012 00	VALVE PISTON	PISTONCINO VALVOLA	PISTON	VENTILKOLBEN
14	650106 00	650106 00	VALVE CAP	CAPPUCCIO VALVOLA	CAPUCHON DE VANNE	VENTILKLAPPE
15	620331 03	620331 03	WATER COOLED CONDENSER	CONDENSATORE AD ACQUA	CONDENSEUR A EAU	WASSERGEKUEHLT KONDENSATOR
16	420010 00	420010 00	SCREW	VITE	VIS	SCHRAUBE
17	650029 03	650029 03	METAL CLIP	DADO IN GABBIA	ECROU	MUTTER
18	733204 00	733204 00	WATER INLET FITTING	RACCORDO INGRESSO ACQUA	RACCORD ARRIVÉE D'EAU	WASSEREINLAUFSTÜCK
19	400031 01	400031 01	FIBER WASHER	RONDELLA IN FIBRA	RONDELLE EN FIBRE	FIBER SCHEIBE
20	620111 00	620111 00	WATER REGULATING VALVE	VALVOLA PRESSOSTATICA	VANNE A EAU PRESSOSTATIQUE	WASSERREGLERVENTIL
21	733173 00	733173 00	OUTLET VALVE FITTING	RACCORDO USCITA VALVOLA PRESS.	RACCORD SORTIE VALVE PRESS.	WASSERREGLEREABFLUSSTUECK
22	281900 03	281900 03	PLASTIC TUBE-PER METER	TUBO IN PLASTICA-PER METRO	TUYAU EN PLASTIQUE-POUR METRE	PLASTIK ROHR-PRO METER
23	650499 00	650499 00	PLASTIC CLAMP	FASCETTA IN PLASTICA	COLLIER EN PLASTIQUE	PLASTIK SCHELLE
660291 00	~~733174 00~~	~~733174 00~~	WATER DRAIN FITTING	RACCORDO SCARICO ACQUA	RACCORD ÉVACUATION EAU	WASSERABFLUSSCHLAUCH
25	400076 00	400076 00	NUT	DADO	ECROU	MUTTER
26	400031 00	400031 00	FIBER WASHER	RONDELLA IN FIBRA	RONDELLE EN FIBRE	FIBER SCHEIBE
27	670003 04	670003 03	DRIER	FILTRO DEUMIDIFICATORE	FILTRE DESHYDRATEUR	TROCKNER
28	784205 02	784406 05	SUCTION LINE/ACCUMULATOR	ACCUMUL. E LINEA ASPIRAZIONE	ENS. ASPIRATION/ACCUMULATEUR	SAMMLER LEITUNGEN

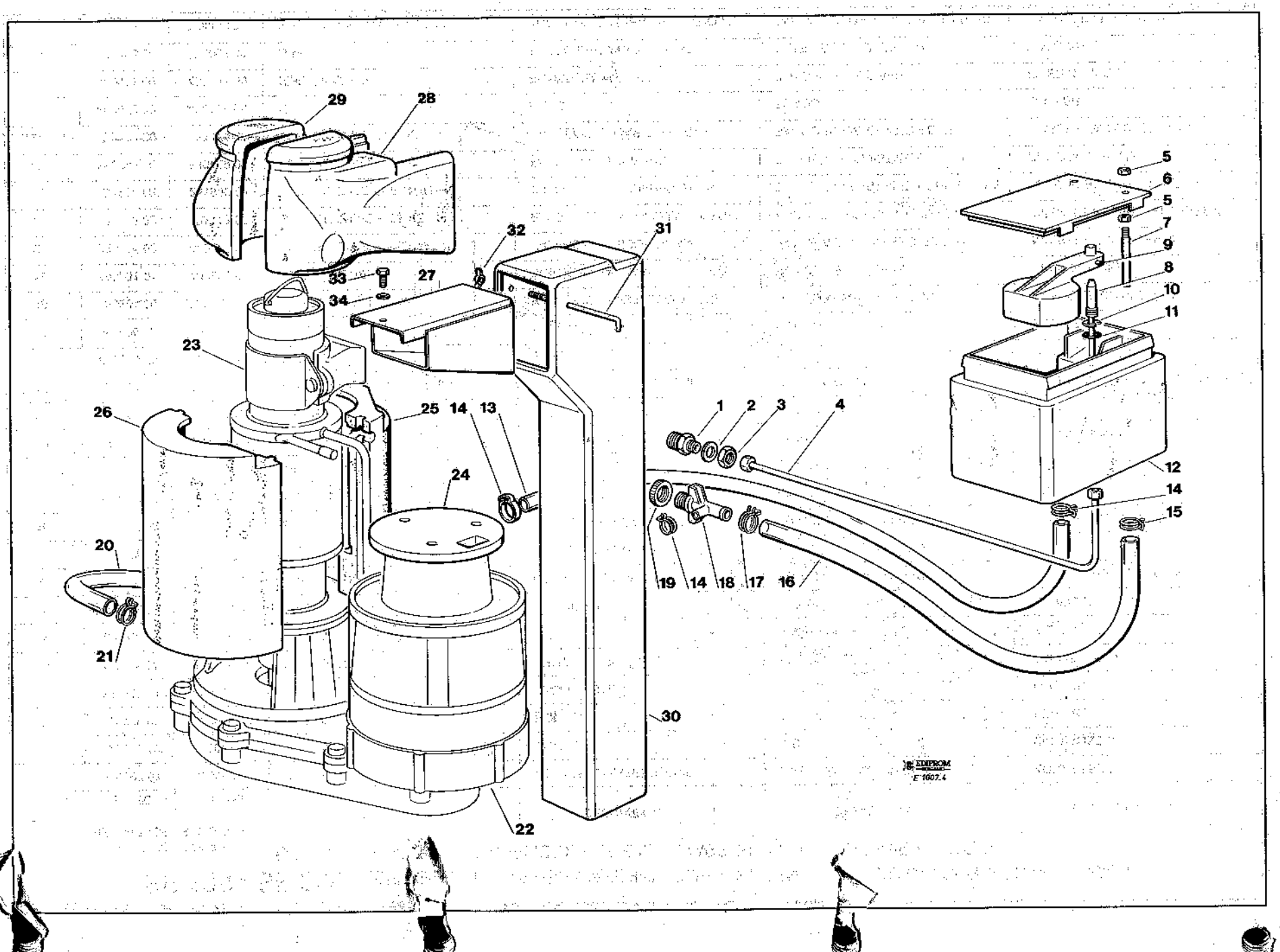
29
28
32
31
33
27
34
23
26
25
14
13
24
20
21
22
30
1
2
3
4
5
6
5
7
9
8
10
11
12
14
15
19
14
18
17
16
EMPROM
E 1607.4

SP 105 - SP 255 - WATER SYSTEM AND INSULATIONS - CIRCUITO IDRAULICO ED ISOLAMENTI
CIRCUIT HYDRAULIQUE ET ISOLATIONS - WASSERKREISLAUF UND ISOLIERUNGEN

ITEM NO POS NO REP. NO REF. NO	PART NO - CODICE REFERENCE - STUECK NR SP 105	 SP 255	DESCRIPTION	DESCRIZIONE	DESIGNATION	BESCHREIBUNG
1	733205 00	733205 00	WATER INLET FITTING	RACCORDO INGRESSO ACQUA	RACCORD ARRIVEE D'EAU	WASSEREINLAUFSTUECK
2	400031 00	400031 00	FIBER WASHER	RONDELLA IN FIBRA	RONDELLE EN FIBRE	FIBER SCHEIBE
3	400030 01	400030 01	NUT	DADO	ECROU	MUTTER
4	NO NUMBER	NO NUMBER	COPPER TUBE	TUBO DI RAME	TUYAU EN CUIVRE	KUPFERRHOR
5	430031 00	430031 00	NUT	DADO	ECROU	MUTTER
6	660363 00	660363 00	WATER RESERVOIR COVER	COPERCHIO VACHETTA	COUVERCLE	BECKENABDECKUNG
7	724215 06	724215 06	WATER LEVEL METAL PIN	PERNO SENSORE LIVELLO ACQUA	DETECTEUR NIVEAU EAU	FÜHLERSTIFT-WASSERNIVEAU
8	783153 00	783153 00	NOZZLE	UGELLO	GICLEUR	VENTILSDUESE
9	783127 00	783127 00	FLOAT VALVE ASSY	ASS. GALLEGGIANTE	ENS. VANNE A FLOTTEUR	SCHWIMMERVENTIL-EINHEIT
10	460038 02	460038 02	CLIP RING	ANELLO SEEGER	CIRCLIP	RING
11	640100 00	640100 00	O RING	GUARNIZIONE OR	JOINT TORIQUE	SIMMERING
12	793126 01	793126 01	WATER RESERVOIR ASSY	ASS. VASCHETTA GALLEGGIANTE	ENS. RÉSERVOIR	BECKEN/SCHWIMMERVENTILEINHEIT
13	281222 00	281222 00	PLASTIC TUBE - PER MTR	TUBO IN PLASTICA - PER METRO	TUYAU EN PLASTIQUE - POUR METRE	PLASTIK ROHR - PRO METER
14	650499 00	650499 00	CLAMP	FASCETTA	COLLIER	SCHELLE
15	460022 00	460022 00	PLASTIC CLAMP	FASCETTA IN PLASTICA	COLLIER EN PLASTIQUE	PLASTIK SCHELLE
16	281832 00	281832 00	PLASTIC TUBE - PER MTR	TUBO IN PLASTICA - PER METRO	TUYAU EN PLASTIQUE - POUR METRE	PLASTIK ROHR - PRO METER
17	460036 00	460036 00	CLAMP	FASCETTA	COLLIER	SCHELLE
18	660224 00	660224 00	WATER DRAIN FITTING	RACCORDO SCARICO ACQUA	RACCORD EVACUATION EAU	WASSERABFLUSSANSCHLUSSE
19	660535 00	660535 00	PLASTIC RING NUT	GHIERA IN PLASTICA	COLLIER DE SERRAGE EN PLASTIQUE	PLASTIKRINGMUTTER
20	610163 02	610163 02	PLASTIC TUBE	TUBO IN PLASTICA	TUYAU EN PLASTIQUE	PLASTIK ROHR
21	460025 00	460025 00	CLAMP	FASCETTA	COLLIER	SCHELLE
22	794225 13	794225 13	GEAR REDUCER ASSY	ASS. MOTORIDUTTORE	ENS .MOTOREDUCTEUR	GETRIEBEMOTOR-EINHEIT
23	794236 07	794237 01	FREEZER ASSY	ASS. FREEZER	ENS. FREEZER	GEFRIERZYLINDEREINHEIT
24	650515 02	650515 02	GEAR MOTOR PLASTIC COVER	PROTEZIONE MOTORE	PROTECTION MOTEUR	PLASTIK MOTORSCHUTZ
25	660375 00	660376 00	INSULATION LEFT	ISOLAMENTO SINISTRO	ISOLATION GAUCHE	GEFRIERZYLINDERISOLIERUNG-LINKS
26	660375 01	660376 01	INSULATION RIGHT	ISOLAMENTO DESTRO	ISOLATION DROITE	GEFRIERZYLINDERISOLIERUNG-RECHTS
27	784053 03	784053 03	S.S. ICE SPOUT	BOCCHETTA SCARICO GHIACCIO	BEC VERSEUR	AUSWURFSCHNAUZE
28	660133 00	660133 00	SPOUT INSULATION LEFT	ISOLAMENTO BOCC. SINISTRO	ISOLATION GAUCHE BEC VERSEUR	AUSWURFSCHNAUZEISOLIERUNG
29	660132 00	660132 00	SPOUT INSULATION RIGHT	ISOLAMENTO BOCC. DESTRO	ISOLATION DROITE BEC VERSEUR	AUSWURFSCHNAUZEISOLIERUNG
30	660455 12	660455 12	PLASTIC ICE CHUTE	CONDOTTO SCARICO GHIACCIO	GOULOTTE	EIS BUNKERAUSLAUF
31	724180 00	724180 00	METAL ROD	TIRANTE	TIRANT	STANGE
32	430083 00	430083 00	WING NUT	DADO AD ALETTE	ECROU	MUTTER

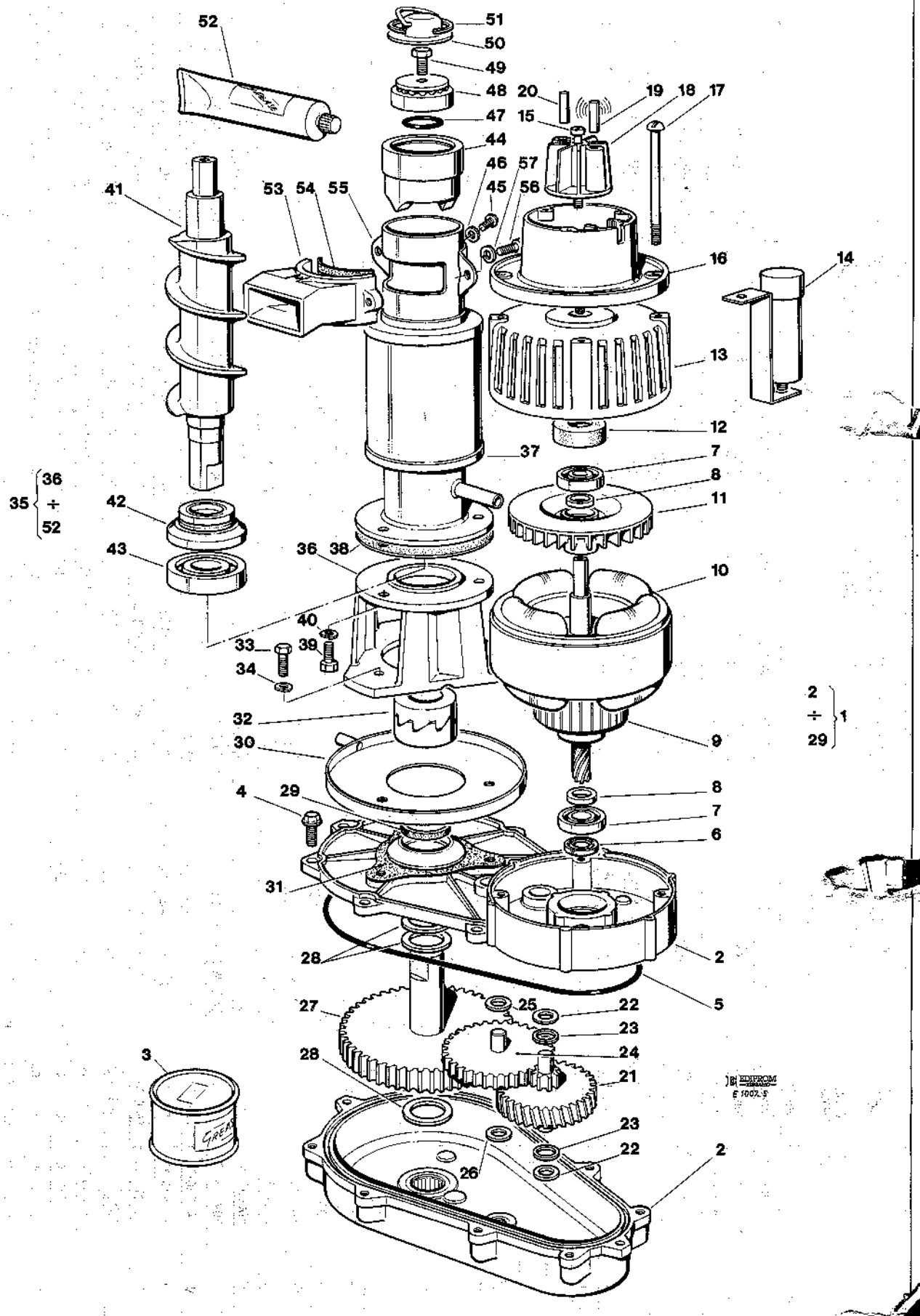
52
51
50
49
48
20
19
18
17
47
15
44
46
57
45
56
41
53
54
55
16
14
13
12
37
7
8
11
35 ÷ 36 52
42
43
36
38
10
40
33
39
34
32
30
2 ÷ 29 1
9
4
29
8
7
6
31
28
2
5
27
25
22
23
24
21
28
3
23
22
26
2

SP 105 - SP 255 - FREEZER AND GEAR REDUCER ASSY - ASSIEME FREEZER E RIDUTTORE
ENS. FREEZER ET MOTOREDUCTEUR - GEFRIERZYLINDER UND GETRIEBEEINHEIT

ITEM NO POS NO REP. NO REF. NO	PART NO - CODICE REFERENCE - STUECK NR SP 105	 SP 255	DESCRIPTION	DESCRIZIONE	DESIGNATION	BESCHREIBUNG
1	794225 13	794225 13	GEAR REDUCER ASSY	ASS. RIDUTTORE	ENS. MOTOREDUCTEUR	GETRIEBEMOTOR CPL
2	001015 01	001015 01	GEAR CASE ASSY	ASS. SCATOLA INGRANAGGI	ENS. CARTER RÉDUCTEUR	GETRIEBEGEHAUSE CPL
3	060294 01	060294 01	GREASE (1 KG)	GRASSO (1 KG)	GRAISSE (1 KG)	FETT (1 KG)
4	03 1251 01	03 1251 01	SCREW	VITE	VIS	SCHRAUBE
5	02 1505 00	02 1505 00	O RING	GUARNIZIONE OR	JOINT TORIQUE	O RING
6	02 1504 00	02 1504 00	GEASE SEAL	PARAOLIO	PARAHUILE	SCHMIERDICHTUNG
7	651056 00	651056 00	BEARING	CUSCINETTO	ROULEMENT	LAGER
8	441800 09	441800 09	TRUST WASHER	RONDELLA DI RASAMENTO	RONDELLE.	UNTERLEG SCHEIBE
9	794123 03	794123 03	ROTOR ASSY	ASS. ROTORE	ENS. ROTOR.	ROTOR EINHEIT
10	620394 00	620394 00	STATOR ASSY	ASS. STATORE	ENS. STATOR	STATOREINHEIT
11	764001 00	764001 00	FAN BLADE	VENTOLA	HELICE	FLÜGEL/RAD
12	640095 00	640095 00	RUBBER INSERT	INSERTO IN GOMMA	BAGUE CAOUTCHOUC	GUMMI LAGER GEHAUSE
13	794226 01	794226 01	DRIVE MOTOR COVER	COPERCHIO MOTORE	COUVERCLE MOTEUR	MOTOR DEKEL
14	620292 04	620292 04	CAPACITOR	CONDENSATORE	CONDENSATEUR	KONDENSATOR
15	03 1403 77	03 1403 77	SCREW	VITE	VIS	SCHAUBE
16	650515 01	650515 01	PLASTIC HOUSING	ALLOGGIAMENTO IN PLASTICA	BôITE DETECTEUR EFF. HALL	KUNSTSTOFFGEHAUSE
17	423872 01	423872 01	SCREW	VITE	VIS	SCHRAUBE
18	650515 04	650515 04	MAGNETO HOLDER	SUPPORTO MAGNETE	SUPPORT DU MAGNETO	MAGNETHALTER
19	650515 05	650515 05	MAGNETIC CYLINDER	CILINDRETTO MAGNETICO	CYLINDRE MAGNETIQUE	MAGNETZYLINDER
20	650515 06	650515 06	NON MAGNETIC CYLINDER	CILINDRETTO NON MAGNETICO	CYLINDRE NON MAGNETIQUE	NICHT MAGNETISCHES ZYLINDER
21	651160 00	651160 00	1SR GEAR & PINION	INGRANAGGIO IN FIBRA	ENGRANAGE EN CELERON	1 GETRIEBERAND & RITZEL
22	03 1408 41	03 1408 41	TRUST WASHER	RONDELLA DI RASAMENTO	RONDELLE.	UNTERLEG SCHEIBE
23	03 1408 38	03 1408 38	TRUST WASHER	RONDELLA DI RASAMENTO	RONDELLE	UNTERLEG SCHEIBE
24	651161 00	651161 00	2ND GEAR & PINION	INGRANAGGIO INTERMEDIO	2eme ENGRANAGE ET PIGNON	2 GETRIEBERAND & RITZEL
25	03 1408 40	03 1408 40	TRUST WASHER	RONDELLA DI RASAMENTO	RONDELLE	UNTERLEG SCHEIBE
26	03 1408 39	03 1408 39	TRUST WASHER	RONDELLA DI RASAMENTO	RONDELLE	UNTERLEG SCHEIBE
27	651162 01	651162 01	OUTPUT GEAR & SHAFT	INGRANAGGIO FINALE	PIGNON-ENGR. D'ENTRAINEMENT	GETRIEBERAD & AUSGANGSTIFT
28	03 1408 21	03 1408 21	TRUST WASHER	RONDELLA DI RASAMENTO	RONDELLE	SCHEIBE
29	02 1607 00	02 1607 00	GREASE SEAL 640019 01	PARAOLIO	PARAHUILE	SCHMIERDICHTUNG

28	03 1408 21	03 1408 21	TRUST WASHER	RONDELLA DI RASAMENTO	RONDELLE	SCHEIBE
29	02 1607 00	02 1607 00	GREASE SEAL 640019 01	PARAOLIO	PARAHUILE	SCHMIERDICHTUNG
30	784062 00	784062 00	DRIP TRAY	RACCOGLIGOCCE	GOUPELLE EAU	TROPFPFANNE
31	640060 00	640060 00	GASKET	GURNIZIONE	JOINT	DICHTUNG
32	060359 02	060359 02	COUPLING	GIUNTO	BAGUE D'ACCOUPLEMENT CPL	KUPPLUNG
33	421052 00	421052 00	SCREW	VITE	VIS	SCHAUBE
34	440015 04	440015 04	WASHER	RONDELLA	RONDELLE	SCHEIBE
35	794236 07	794237 01	FREEZER ASSY	ASS. FREEZER	ENS. FREEZER	GEFRIERZYLINDEREINHEIT
36	764010 00	764010 00	ALUMINIUM ADAPTER	SUPPORTO DI ALLUMINIO	SUPPORT	PASSTUECK
37	784260 09	784261 07	WORM TUBE ONLY	TUBO EVAPORATORE	CYLINDRE EVAPORATEUR	GEFRIERZYLINDER
38	640030 00	640030 00	GASKET	GUARNIZIONE	JOINT	DICHTUNG
39	420024 01	420024 01	SCREW	VITE	VIS	SCHRAUBE
40	440025 00	440025 00	WASHER	RONDELLA	RONDELLE	SCHEIBE
41	724052 07	724052 06	AUGER	COCLEA	VIS SANS FIN	SCHNECKE
42	02 1300 01	02 1300 01	WATER SEAL 640040 00	ASSIEME PREMISTOPPA	GARNITURE D'ETANCHEITE	WASSERDICHTUNGEINHEIT
43	670011 01	670011 01	LO BEARING	CUSCINETTO INFERIORE	PALIER INFERIEUR	UNTERESLAGER
44	754001 01	754001 01	ICE BREAKER ONLY	ROMPIGHIACCIO	BROYEUR	EISBRECHER
45	420008 01	420008 01	SCREW	VITE	VIS	SCHRAUBE
46	440015 05	440015 05	WASHER	RONDELLA	RONDELLE	SCHEIBE
47	640041 01	640041 01	O RING	GUARNIZIONE OR	JOINT TORIQUE	O RING
48	670041 00	670041 00	TOP BEARING	CUSCINETTO SUPERIORE	PALIER SUPERIEUR	OBERESLAGER
49	420030 00	420030 00	SCREW	VITE	VIS	SCHAUBE
50	A 07701 00	A 07701 00	CAP	CALOTTA	CALOTTE	KUGELHAUBE
51	650297 00	650297 00	CLIP RING	ANELLO SEEGER	CIRCLIP	RING
52	19 0569 01	19 0569 01	WATER PROOF GREASE (4 OZ)	GRASSO IDROREPELL. (110 GR)	GRAISSE (110 GR)	FETT (110 GR)
53	754004 00	754004 00	SPOUT CASTING	BOCCHETTA IN OTTTONE	GOULOTTE EN LAITON	MESSINGEISWURFSCHUTE
54	13 0679 00	13 0679 00	GASKET	GUARNIZIONE	JOINT	DICHTUNG
55	724087 00	724087 00	SPOUT PLATE	PIASTRINA BOCCHETTA	BRIDE DE GOULOTTE	EISWURFSCHUTE PLATTE
56	420008 03	420008 03	SCREW	VITE	VIS	SCHAUBE
57	440015 05	440015 05	WASHER	RONDELLA	RONDELLE	SCHEIBE

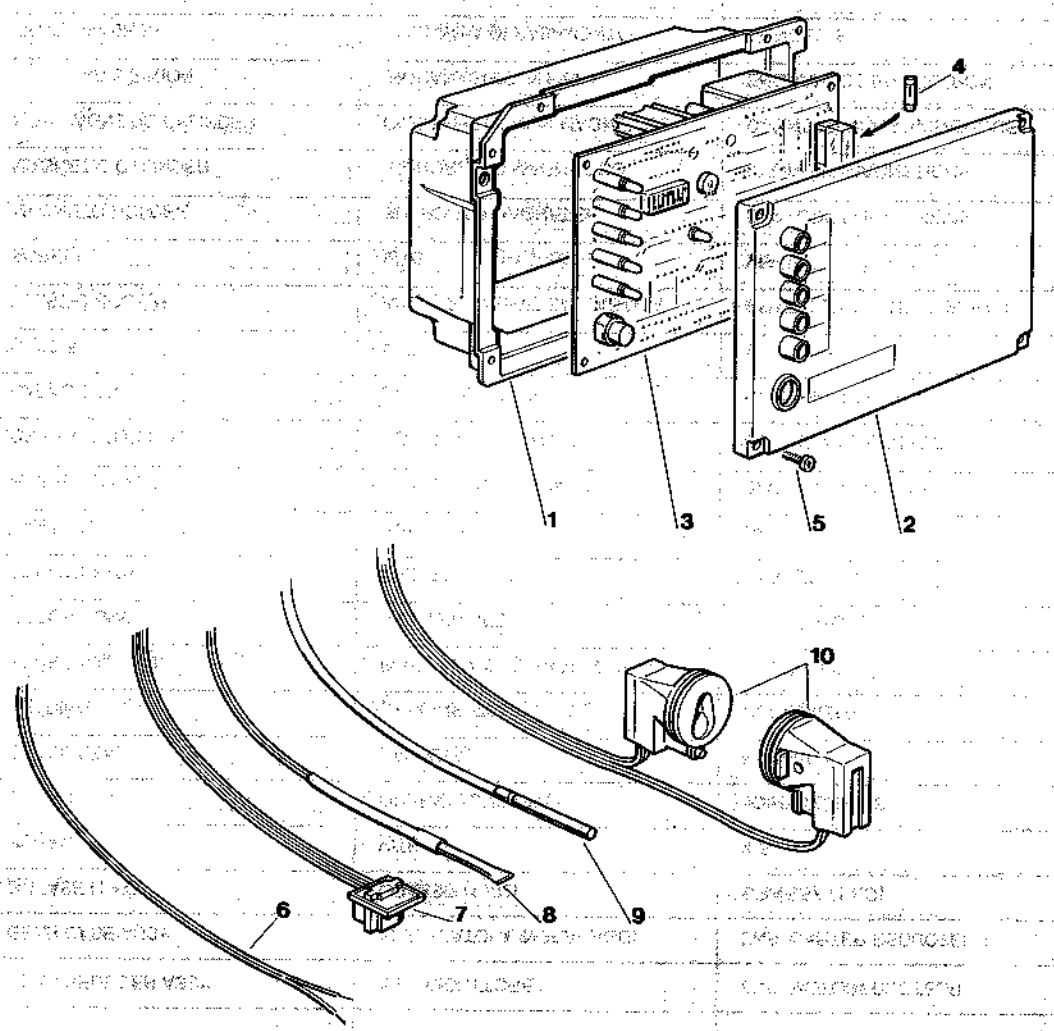
4
1
3
5
2
10
6
7
8
9

SP 105 - SP 255 - P.C. BOARD AND SENSOR ASSY - SCHEDA ELETTRONICA E SENSORI - ENS. CARTE ELECTRINIQUE ET DETECTEURS/ELEKTRONISCHE KARTE UND TEMPERATURFUEHLERENHEIT

ITEM NO POS NO REP. NO REF. NO	PART NO CODICE REFERENCE STUECK NR	DESCRIPTION	DESCRIZIONE	DESIGNATION	BESCHREIBUNG
1	660546 00	CONTROL BOX	SCATOLA ELETTRICA	BOITE ELECTRIQUE	SCHALTSCHRANK
2	660547 00	CONTROL BOX COVER	COPERCHIO SCATOLA ELETTRICA	COUVERCLE BOITE DE COMMANDE	SCHALTSCHRANK DECKEL
3	620403 03	P.C. BOARD ASSY	ASSIEME SCHEDA ELETTRONICA	ENSAMBLE CARTE ELECTRONIQUE	GEDRUCKTESCHALTUNG
4	630015 09 630015 10	FUSE (100 mA) FUSE (16 A)	FUSIBILE (100 mA) FUSIBILE (16 A)	FUSIBLE (100 mA) FUSIBLE (16 A)	SCHMELZSICHERUNG (100 mA) SCHMELZSICHERUNG (16 A)
5	470000 07	SCREW	VITE	VIS	SCHRAUBE
6	620404 04	WATER LEVEL SENSOR	SENSORE LIVELLO ACQUA	CAPTEUR NIVEAU EAU	WASSERNIVEAUFÜHLER
7	620404 03	HALL EFFECT SENSOR	SENSORE EFFETTO HALL	CAPTEUR EFFECT HALL	HALL EFFEKT-FÜHLER
8	620404 01	CONDENSER TEMP. SENSOR	SENSORE TEMP. CONDENSATORE	CAPTEUR TEMP. CONDENSEUR	KONDENSATORTEMPERATURFUEHLER
9	620404 10	EVAPORATOR TEMP. SENSOR	SENSORE TEMP. EVAPORATORE	CAPTEUR TEMP. ÉVAPORATEUR	VERDAMPFERTEMPERATURFUEHLER
10	785086 ~~00~~ 02 R	ICE LEVEL CONTROL ASSY	ASS. CONTR. LIVELLO GHIACCIO	ENS. DETECTEUR NIVEAU GLACE	EISNIVEAUFUEHLEREINHEIT

COMPRESSOR CHART - TABELLA COMPRESSORI - TABLEAU COMPRESSEUR - KOMPRESSOR KARTE

MODEL MODELLO MODELE MODELL	VOLTS TENSIONE TENSION SPANNUNG	COMPRESSOR MODEL MOD. COMPRESSORE TYPE COMPRESSEUR KOMPRESSOR TYP	COMPRESSOR COMPRESSORE COMPRESSEUR KOMPRESSOR	RELAY RELÉ RELAIS RELAIS	PROTECTOR PROTETTORE PROTECTEUR SCHUTZGERAT	START CAPACITOR CAPACITA' D'AVV. CAPACITÉ DE DEMARRAGE START KONDENSATOR	RUN CAPACITOR CAPACITA' DI MARCIA CAPACITÉ PERMANENCE BETRIEB KONDENSATOR
SP 105	115/60/1						
SP 255	115/60/1						
SP 105	230/60/1						
SP 255	230/60/1						
SP 105	220/50/1	U.H. L 45 TN	670097 01	620057 32	620058 54	620167 23	*****
SP 255	220/50/1	U.H. P 12 TN	670097 03	620168 19	620058 59	620167 27	620167 28

ELECTRIC COMPONENTS CHART - TABELLA COMPONENTI ELETTRICI - TABLEAU COMPOSANTS ELECTRIQUE - ELEKTRISCHEKARTE

MODEL MODELLO MODELE MODELL	VOLTS TENSIONE TENSION SPANNUNG	GEAR MOTOR ASSY ASS. MOTORIDUTTORE ENS. MOTOREDUCTEUR GETRIEBEMOTOREINHEIT	FAN MOTOR ONLY MOTORE VENTILATORE MOTEUR VENTILATEUR LUFTER MOTOR	DRIVE MOTOR CAPACITOR CAPACITA' MOTORE RIDUTT. CONDENSATEUR MOTEUR REDUCT. KONDENSATOR	P.C. BOARD SCHEDA ELETTRONICA CARTE ELECTRONIQUE ELEKTRONISCHE KARTE
SP 105	115/60/1	794225 14	*****	620292 00	620403 04
SP 255	115/60/1	794225 14	*****	620292 00	620403 04
SP 105	230/60/1	794225 13	620003 22	620292 04	620403 03
SP 255	230/60/1	794225 13	620003 22	620292 04	620403 03
SP 105	220/50/1	794225 13	620003 22	620292 04	620403 03
SP 255	220/50/1	794225 13	620003 22	620292 04	620403 03