DESPIECE TECNICO

Planchadoras
Roller Ironers

Modelo / Model :

PE-25 / 100 MP
PE-25 / 120 MP
PE-25 / 150 MP

Febrero 2012 February

FAGOR

Fagor Industrial

LEGENDA PEZZI, SPARE PART LIST					FIG. A
Model	**100/25-S100/25V**	**120/25-S120/25V**	**140/25-S140/25V**	**140/25AV-S140/25AVL**	

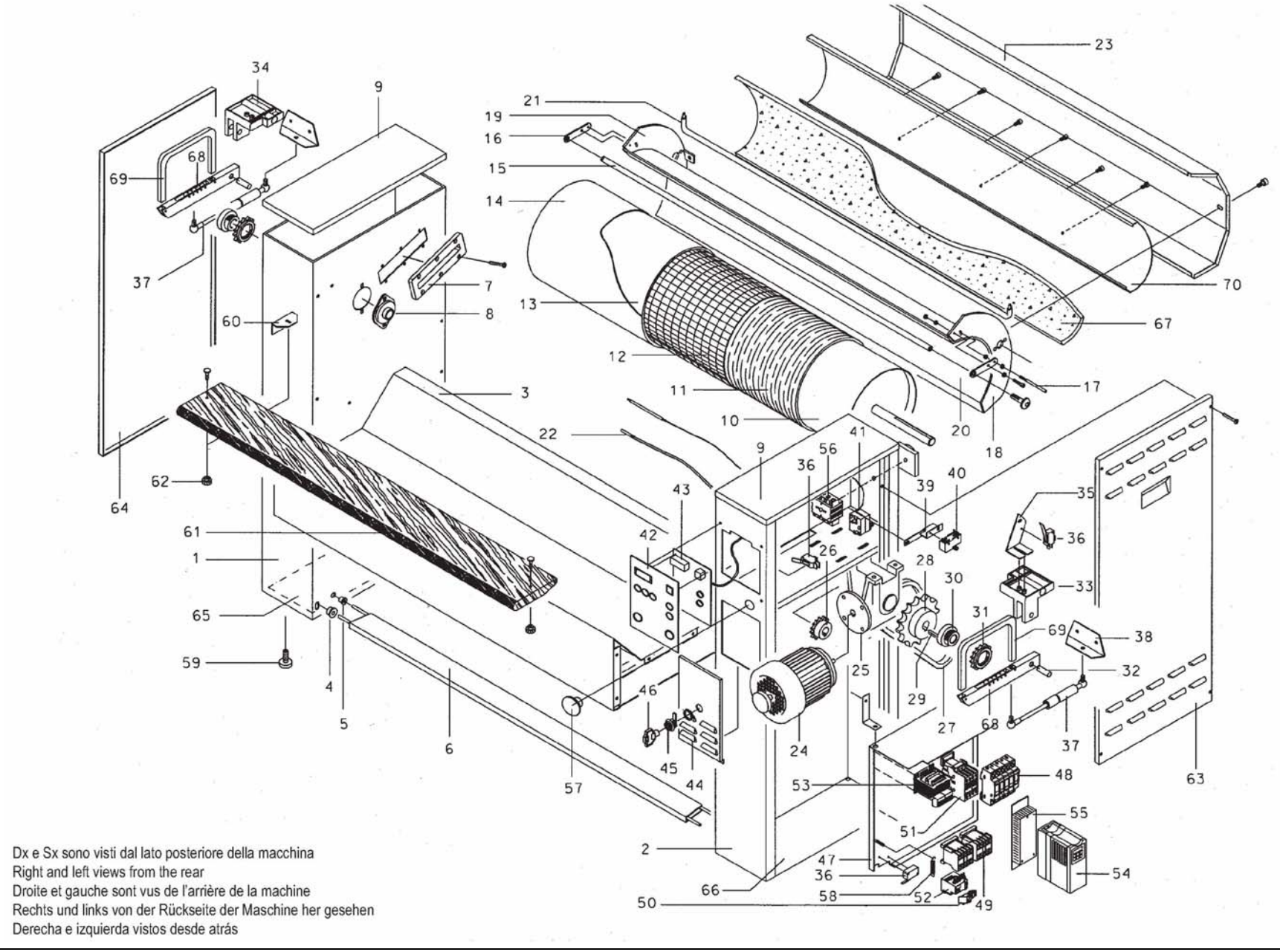

LEGENDA PEZZI, SPARE PART LIST				FIG. A
Model	**100/25-S100/25V**	**120/25-S120/25V**	**140/25-S140/25V**	**140/25AV-S140/25AVL**

POS.	COD.	DESCRIZIONE	DESCRIPTION	NOTE	
1	GR543014002700	Fianco DX	Right-hand panel	100/25 , 120/25 , 140/25 , 140/25	
	GR543014002705			140/25 AV , 140/25 AVL	
2	GR543014001302	Fianco SX	Left-hand panel	L = 130 mm , No fan option	SN ≥ J0315001793
	GR543014001306			L = 130 mm , 140/25 AV , 140/25 AVL	SN ≥ J0315001793
3	GR543010003000	Portabianch.	Laundy basket	100/25	
	GR543012003000			120/25	
	GR543014003000			140/25 , 140/25 V , 140/25 AV	
	GR543014003005			140/25 AVL	
4	GR540601000003	Passacavo diam.	Cable duct diam.	14/20	
5	GR543014006300	Boccola per pedaliera	Pedal bush	SN ≤ J0315002212	
	GR550000701008			SN ≥ J0315002213	
6	GR544010004300	Pedaliera	Pedal	100/25	SN ≤ J0315002288
	GR543010004500			100/25	SN ≥ J0315002294
	GR544012004300			120/25	SN ≤ J0315002306
	GR543012004500			120/25	SN ≥ J0315002315
	GR544014004300			140/25	SN ≤ J0315002192
	GR543014004500			140/25	SN ≥ J0315002213
7	GR543014002400	Guida conca	Basin guide		
8	GR540601000069	Cuscinetto SB204	Bearing SB204	No fan option	
9	GR543014001400	Chiusura superiore	Upper lock		
10	GR544010004700	Rullo+albero	Roller+shaft	100/25	
	GR544012004700			120/25	
	GR544014004700			140/25 No fan option	
	GR544014004705			140/25 with fan option	
11	GR53-GI-100011	Lana acciaio	Steel wool	Minimum order qty. 5 kg	
12	GR54-GI-601015	Telo Juta	Jute sheet	100/25	
	GR54-GI-601018			120/25	
	GR54-GI-601026			140/25 no fan option	
13	GR54-GI-601016	Mollettone	Flannel layer	100/25	
	GR54-GI-601019			120/25	
	GR54-GI-601027			140/25	

LEGENDA PEZZI, SPARE PART LIST					FIG. A
Model	**100/25-S100/25V**	**120/25-S120/25V**	**140/25-S140/25V**	**140/25AV-S140/25AVL**	
POS.	COD.	DESCRIZIONE	DESCRIPTION	NOTE	
14	GR54-GI-601020	Telo cotone	Cotton sheet	100/25	
	GR54-GI-601022			120/25	
	GR54-GI-601028			140/25	
	GR54-GI-601035	Telo Nomex	Nomex sheet	100/25	
	GR54-GI-601038			120/25	
	GR54-GI-601040			140/25	
15	GR543010004000	Asta salvadita	Finger safety rod	100/25	SN ≤ J0315005221
	GR543010004005			100/25 (RED)	SN ≥ J0315005242
	GR543010004010			100/25 (BLACK)	SN ≥ J0315005242
	GR543012004000			120/25	SN ≤ J0315005204
	GR543012004005			120/25 (RED)	SN ≥ J0315005222
	GR543012004010			120/25 (BLACK)	SN ≥ J0315005222
	GR543014004000			140/25	SN ≤ J0315005140
	GR543014004005			140/25 (RED)	SN ≥ J0315005141
	GR543014004010			140/25 (BLACK)	SN ≥ J0315005141
16	GR543014004101	Piastrina salvadita	Finger safety plate		
17	GR543014004200	Perno per salvadita	Finger safety pin		
18	GR543014002200	Fianco conca SX	Basin left-side panel		
19	GR543014003600	Fianco conca DX	Basin right-side panel		
20	GR543010003300	Conca alluminio	Aluminium basin	100/25	
	GR543012003300			120/25	
	GR543014003300			140/25	
21	GR540651000118	Resistenza 100/25	Heating element 100/25	400-230 VAC market	
	GR540651000130			415-240-440 VAC market	
	GR540651000122	Resistenza 120/25	Heating element 120/25	400-230 VAC market	
	GR540651000132			415-240-440 VAC market	
	GR540651000126	Resistenza 140/25	Heating element 140/25	400-230 VAC market no fan option	
	GR540651000128			400-230 VAC market with fan option	
	GR540651000134			415-240-440 VAC market	
22	GR540751000021	Sonda di temperat. PT100	Temperature probe PT100		

LEGENDA PEZZI, SPARE PART LIST					FIG. A
Model	**100/25-S100/25V**	**120/25-S120/25V**	**140/25-S140/25V**	**140/25AV-S140/25AVL**	

POS.	COD.	DESCRIZIONE	DESCRIPTION	NOTE	
23	GR543010003705	Copriconca	Basin cover	100/25	
	GR543012003705			120/25	
	GR543014003705			140/25	
24	GR540651000050	Motore con volantino	Motor with hand wheel		
	GR540651000051			400 , 415 VAC 60 Hz market no speed regulation	
25	GR540651000052	Riduttore	Reduction gear	RM1 40S 1/100	
26	GR543014000500	Pignone	Pinion	3/8” Z16	
	GR543014000200			3/8” Z13 , 60Hz market no speed regulation	
27	GR543014000300	Catena	Chain	3/8” L=730mm	
28	GR543014000400	Corona	Pinion	3/8” Z40 no fan option	
	GR543014000405			3/8” Z40 with fan option	
29	GR540405006640 x 2 GR540405006620 x 2	Chiavetta	Key	6 x 6 x 40 6 x 6 x 20	
30	GR543014000600	Supporto ruota libera	Freewheel support	No fan option	
31	GR540601000346	Ruota libera	Freewheel	1/2”x1/8” Z18	
32	GR540405001240	Spina acciaio	Steel pin		
33	GR543014005501	Supp. conca DX	Right-hand basin support		
34	GR543014005502	Supp. conc a SX	Left-hand basin support		
35	GR543014002601	Supporto micro asta salv.	Support of safety rod microswitch		
36	GR54-GI-651130	Micro interruttore	Microswitch		
37	GR543014005901	Molla a gas	Gas spring		
38	GR543014003800	Supporto molla a gas	Gas spring support		
39	GR543014006800	Supporto micro finecorsa	Support of limit microswitch		
40	GR50-GI-951021	Micro finecorsa	Limit microswitch		
41	GR540751000028	Termostato di sicurezza	Safety thermostat		
42	GR540601000041	Cruscotto SDT	Control board without speed control	L = 130 mm	
	GR540601000043			Customized version	
	GR540601000020	Cruscotto VV	Control board with speed control	L = 150 mm	
	GR540601000042			L = 130 mm	
	GR540601000044			Customized version	
43	GR540601000022	Scheda comando	Control card	Standard no speed regulation	
	GR540601000024			With speed regulation	
44	GR543014002100	Porta emergenza	Emergency door		
45	GR540601000079	Serratura	Door lock		
46	GR540601000007	Chiave per serratura	Lock key		

LEGENDA PEZZI, SPARE PART LIST					FIG. A
Model	**100/25-S100/25V**	**120/25-S120/25V**	**140/25-S140/25V**	**140/25AV-S140/25AVL**	

POS.	COD.	DESCRIZIONE	DESCRIPTION	NOTE	
47	GR540601000005	Piastra cablaggio	cable plate	Standard no speed regulation	
	GR540601000008			With speed regulation	
48	GR50-GI-851121	Portafusibile	Fuse holder	5 pcs for 3ph , 4 pcs for 1 ph	
	GR999997000005 x 2 pcs GR999997000100 x 3 pcs	Fusibile L=38,diam=10,3 , 0,5 Amp Fusibile L=38,diam=10,3 , 10 Amp	Fuse L=38,diam=10,3 , 0,5 Amp Fuse L=38,diam=10,3 , 10 Amp	100/25 , 120/25 , no speed regulation	440/3ph + 400/3ph
	GR999997000005 x 2 pcs GR999997000160 x 3 pcs	Fusibile L=38,diam=10,3 , 0,5 Amp Fusibile L=38,diam=10,3 , 16 Amp	Fuse L=38,diam=10,3 , 0,5 Amp Fuse L=38,diam=10,3 , 16 Amp	140/25 no speed regulation	440/3ph + 400/3ph
	GR999997000040 x 2 pcs GR999997000100 x 3 pcs	Fusibile L=38,diam=10,3 , 4 Amp Fusibile L=38,diam=10,3 , 10 Amp	Fuse L=38,diam=10,3 , 4 Amp Fuse L=38,diam=10,3 , 10 Amp	100/25 , 120/25 , with speed regulation	400/3ph
	GR999997000040 x 2 pcs GR999997000160 x 3 pcs	Fusibile L=38,diam=10,3 , 4 Amp Fusibile L=38,diam=10,3 , 16 Amp	Fuse L=38,diam=10,3 , 4 Amp Fuse L=38,diam=10,3 , 16 Amp	140/25 , with speed regulation or 140/25AV , 140/25 AVL	400/3ph
	GR999997000005 x 2 pcs GR999997000160 x 3 pcs	Fusibile L=38,diam=10,3 , 0,5 Amp Fusibile L=38,diam=10,3 , 16 Amp	Fuse L=38,diam=10,3 , 0,5 Amp Fuse L=38,diam=10,3 , 16 Amp	100/25 , 120/25 , no speed regulation	230/3ph
	GR999997000005 x 2 pcs GR999997000250 x 3 pcs	Fusibile L=38,diam=10,3 , 0,5 Amp Fusibile L=38,diam=10,3 , 25 Amp	Fuse L=38,diam=10,3 , 0,5 Amp Fuse L=38,diam=10,3 , 25 Amp	140/25 , no speed regulation	230/3ph
	GR999997000040 x 2 pcs GR999997000250 x 2 pcs	Fusibile L=38,diam=10,3 , 4 Amp Fusibile L=38,diam=10,3 , 25 Amp	Fuse L=38,diam=10,3 , 4 Amp Fuse L=38,diam=10,3 , 25 Amp	100/25 , with speed regulation	230/1ph
	GR999997000040 x 2 pcs GR999997000320 x 2 pcs	Fusibile L=38,diam=10,3 , 4 Amp Fusibile L=38,diam=10,3 , 32 Amp	Fuse L=38,diam=10,3 , 4 Amp Fuse L=38,diam=10,3 , 32 Amp	120/25 , with speed regulation	230/1ph
49	GR50-851000262	Minicontat.	Microcontactor	230V 4KW 1N.C.	
50	GR50-851000268	Ausiliario Termica	Overload aux.	MATV10AT	
51	GR50-851000250	Contattore	Contactor	230V 4 KW	
52	GR50-851000265	Relè termico	Thermal relay	MT03F	
53	GR50-851000283	Trasf. 50VA	Transf. 50VA	Standard no speed regulation	
	GR50-851000284	Trasf. 320VA	Transf. 320VA	With speed regulation	
54	GR540751000045	Inverter EN 05 07	Inverter EN 05 07	SN ≥ J0315003778 , SN ≤ J0315008164	
	GR540751000042	Inverter FR-D 720S-014-EC	Inverter FR-D 720S-014-EC	SN ≤ J0315003771 , SN ≥ J0315008201	
55	GR540751000041	Filtro FS 1320	Filter FS 1320	SN ≤ J0315003771 , SN ≥ J0315008201	
56	GR50-GI-851165	Interr. Sez. 3 Fasi	3-phase circuit breaker		
57	GR540751000025	Pulsante a fungo	Emergency push-button		
	GR540751000024	Ghiera e contatto	Nut and contact		
	GR540751000026	Etichetta emergenza	Emergency label		
58	GR540601000050	Molla pedale	Pedal spring		
59	GR540601000305	Piedino di regolazione	Adjustment foot		
60	GR543014005200	Supporto asse in legno	Wooden board support		

LEGENDA PEZZI, SPARE PART LIST					FIG. A
Model	**100/25-S100/25V**	**120/25-S120/25V**	**140/25-S140/25V**	**140/25AV-S140/25AVL**	

POS.	COD.	DESCRIZIONE	DESCRIPTION	NOTE	
61	GR543010005100	Asse in legno	Wooden board	100/25	
	GR543012005100			120/25	
	GR543014005100			140/25	
62	GR540601000102	Pomello fiss. asse in legno	Fastening knob for wooden board		
63	GR543014001800	Porta	Door		
64	GR543014001800	Porta	Door		
65	GR543014001500	Chiusura inferiore DX	Right bottom lock		
66	GR543014001600	Chiusura inferiore SX	Left bottom lock		
67	GR540203050850	Materassino isolante	Thermal insulation	100/25	
	GR540203051050			120/25	
	GR540203051250			140/25	
68	GR543014000801	Cremagliera	Rack		
69	GR543014005801	Archetto	Bow		
33 + 32 + 68 + 69	GR545014007701	Assieme cremagliera completo	Complete rack assembly		
34 + 32 + 68 + 69	GR545014007702	Assieme cremagliera completo	Complete rack assembly		

LEGENDA PEZZI, SPARE PART LIST					FIG. B
Model			**140/25AV**	**140/25AV-S140/25AVL**	

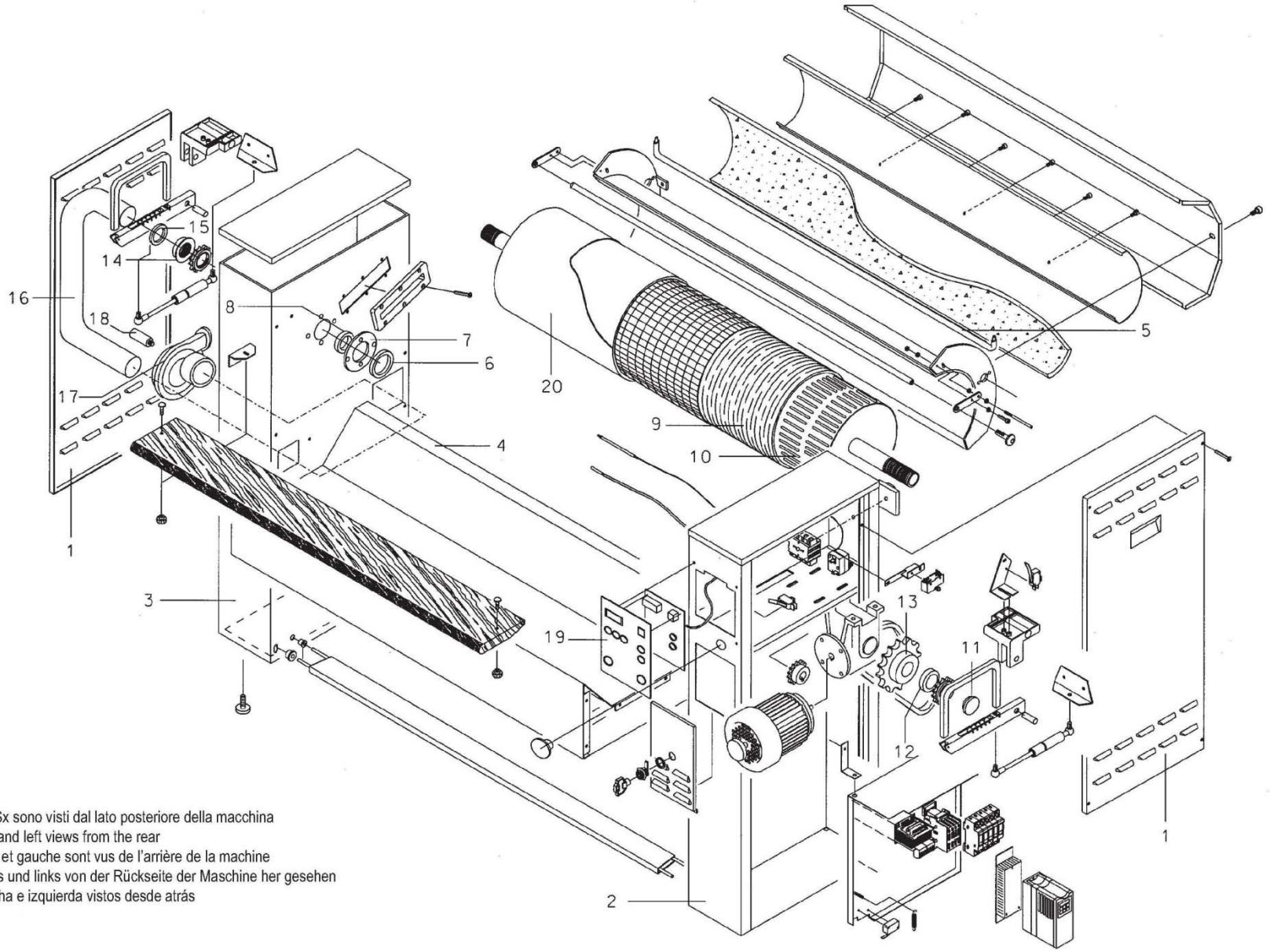

Dx e Sx sono visti dal lato posteriore della macchina
Right and left views from the rear
Droite et gauche sont vus de l'arrière de la machine
Rechts und links von der Rückseite der Maschine her gesehen
Derecha e izquierda vistos desde atrás

LEGENDA PEZZI, SPARE PART LIST					FIG. B
Model			**140/25AV**	**140/25AVL**	
POS.	COD.	DESCRIZIONE	DESCRIPTION	NOTE	
1	GR543014001800	Porta	Door		
2	GR543014001305	Fianco SX per aspirazione	Left side panel for extracting system	L = 150 mm , S140/25AV+AVL	
	GR543014001306			L = 130 mm , S140/25AV+AVL	
3	GR543014002705	Fianco DX per aspirazione	Right side panel for extracting system	140/25AV + AVL	
4	GR543014003005	Portabiancheria	Laundry basket	140/25AV + AVL	
5	GR540651000128	Resistenza 2800W/230V	Heating element 2800W/230V	140/25AV + AVL	
6	GR543014007100	Anello centraggio rullo	Roller centering ring	140/25AV + AVL	
7	GR543014006900	Flangia supporto cuscinetto	Ball bearing support flange	140/25AV + AVL	
8	GR540601000070	Cuscinetto	Ball bearing	61807 2Z , 140/25AV+AVL	
9	GR540100000500	Rete metallica	Metallic net	2kg , 140/25AV	
	GR53-GI-100015	Rivestimento a molle	Spring roller cover	45 mt , 140/25AVL	SN ≥ J0315006411
	GR53-GI-1000151	Rivestimento lamellare	Laminar cover	30 mt , 140/25AVL	SN ≤ J0315006130
10	GR544014004705	Rullo + albero	Roller + Shaft	140/25AV+AVL	
11	GR540601000002	Tappo di chiusura rullo	Roller closing plug	140/25AV+AVL	
12	GR543014008000	Distanziale lato motore	Spacer on motor side	140/25AV+AVL	
13	GR543014000405	Pignone	Pinion	3/8 Z40 , 140/25AV+AVL	
14	GR543014007000	Flangia supp. aspirazione	Support flange for extracting system	140/25AV+AVL	
15	GR550000701080	Cuscinetto	Ball bearing	61809 2RS1 , 140/25AV+AVL	
16	GR550000701014	Tubo aspirazione	Extraction tube	1,33 mt , 140/25AV+AVL	
17	GR540651000048	Aspiratore completo	Complete extracting system	140/25AV+AVL	
18	GR53-GI-751111	Condensatore	Capacitor	1 microF , 140/25AV+AVL	
19	GR540601000020	Cruscotto VV	Control board with speed control	L = 150 mm 140/25AVL	
	GR540601000042			L = 130 mm 140/25AVL	
	GR540601000044			Customized version	
20	GR54-GI-601042	Mollettone Nomex 400 gr/mq.	Nomex flannel layer 400gr/sq.m	140/25AVL	