SIMAG

SD 125

R 404 A VERSION

SPARE PARTS LIST
CATALOGO RICAMBI
CATALOGUE PIÈCES DÉTACHÉES
ERSATZTEILENKATALOG

REV. 2/2001

SD125 - SD125W

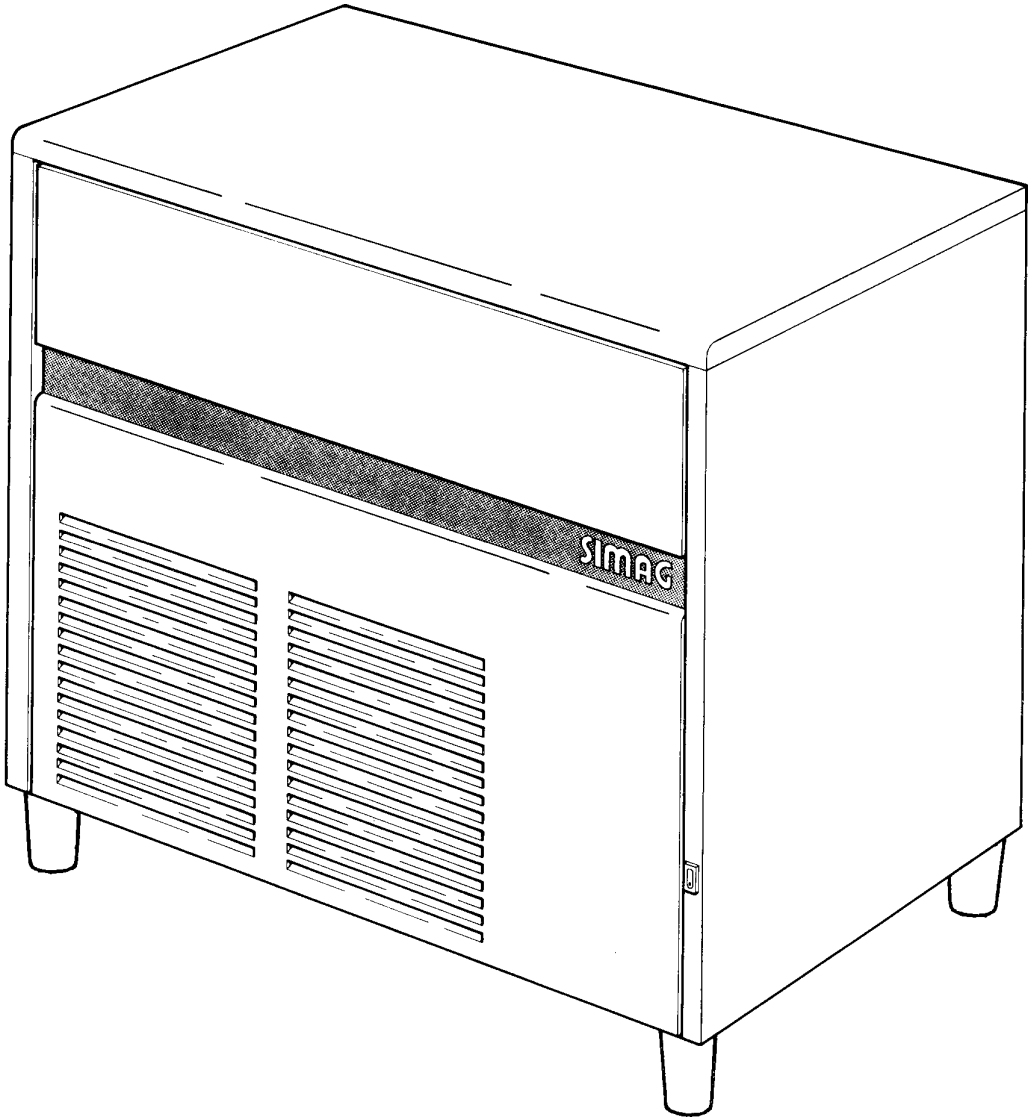

SD125 - SD125W

TAVOLA 1

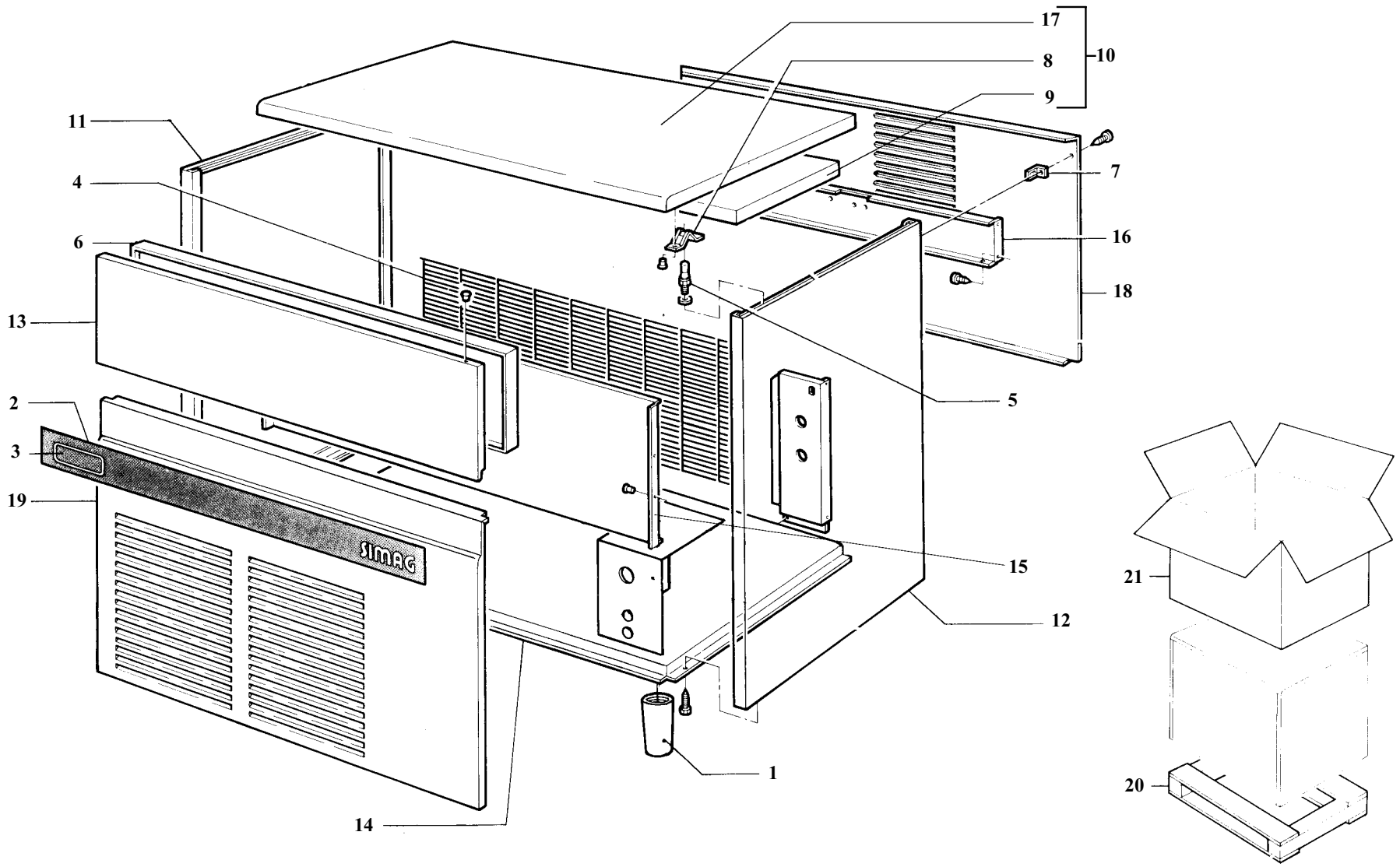

SD125 - SD125W					TAVOLA 1
N	**COD.**	**DESCRIZIONE**	***DENOMINATION***	**DESCRIPTION**	***BESCHREIBUNG***
1	**660638 00**	Piede di supporto	*Pied*	Foot	*Gerätefuss*
2	**Z1AM004**	Targa serigrafata	*Plaquette marque*	Name plate facia	*Markenschild*
3	**650717 06**	Targhetta modello	*Plaquette d'identification*	Model badge	*Modellbezeichnung*
4	**Z1AM008**	Griglia posteriore	*Grille postérieure*	Rear grill	*Hinteres Belüftungssgitter*
5	**650697 01**	Perno	*Axe*	Stud	*Stift*
6	**660648 00**	Controsportello	*Contreporte*	Door internal plate	*Hintere Seite Entnahmeklappe*
7	**650583 00**	Piastrine angolari	*Plaquette angulaires*	Retaining bracket	*Eckhalterung*
8	**650085 01**	Molla	*Ressort*	Retainer	*Feder*
9	**Z1AM089**	Pannello isolante	*Panneau isolant*	Top panel insulation	*Isolation*
10	**781405 04**	Assieme pannello super.	*Ensemble couvercle*	Top panel assy	*Deckel komplett*
11	**721572 01**	Fiancata sinistra	*Joue gauche*	Left side panel	*Linke Gehäuseseite*
12	**721572 00**	Fiancata destra	*Joue droite*	Right side panel	*Rechte Gehäuseseite*
13	**060491 26**	Assieme sportello	*Ens. porte*	Door assy	*Entnahmeklappe komplett*
14	**784410 10**	Assieme basamento	*Ensemble chassis*	Base assy	*Chassis einheit*
15	**784285 01**	Traverso anteriore	*Traverse antérieure*	Front support	*Vordere Verbindungsstrebe*
16	**703228 00**	Traverso supp. pompa	*Traverse support pompe*	Pump support panel	*Halterung pumpe*
17	**721569 00**	Coperchio	*Couvercle*	Top panel	*Deckel*
18	**702158 00**	Pannello posteriore	*Panneau postérieur*	Rear panel	*Hintere Abdeckung*
19	**721568 01**	Pannello anteriore	*Panneau frontal*	Front panel	*Vordere Gehäuseabdeckung*
20	**680333 03**	Base imballo	*Socle*	Pallet	*Palette*
21	**Z1IM015**	Scatola imballo	*Caisse carton*	Carton	*Karton*

SD125 - SD125W

TAVOLA 2

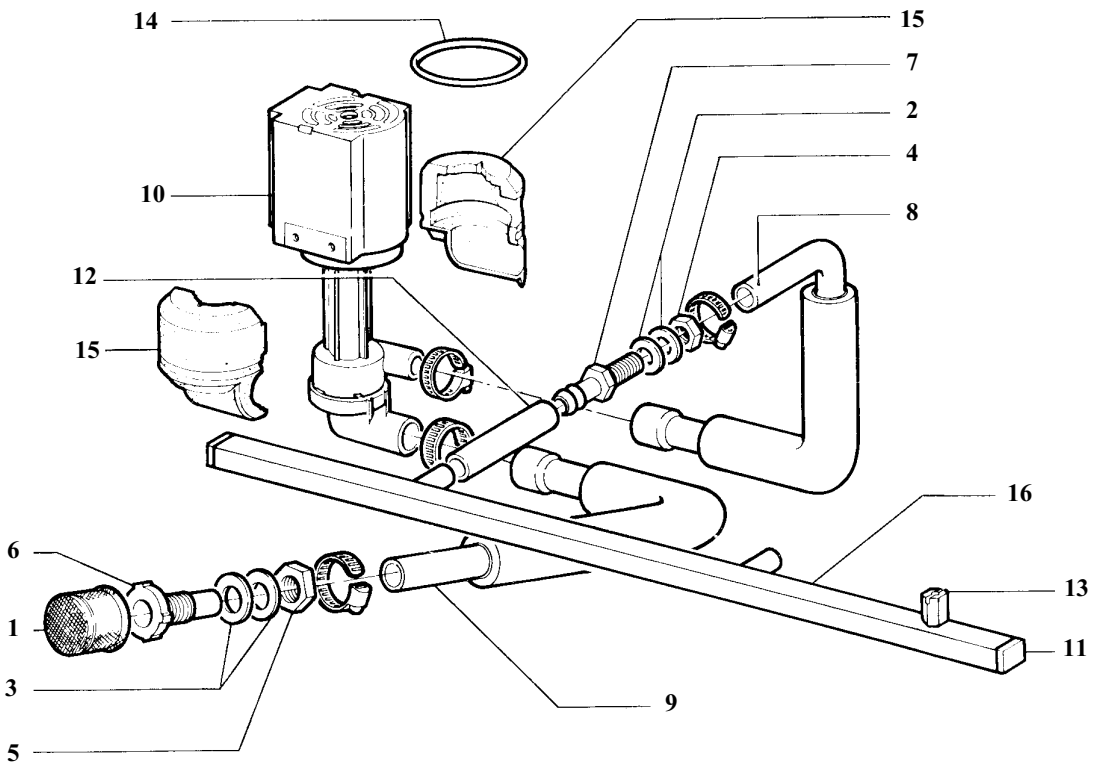

SD125 - SD125W					TAVOLA 2
N	**COD.**	**DESCRIZIONE**	***DENOMINATION***	**DESCRIPTION**	***BESCHREIBUNG***
1	**Z1AC012**	Filtro aspirazione pompa	*Filtre aspiration pompe*	Pump feeding filter	*Pumpenansaugfilter*
2	**Z1AC013**	Rondella	*Rondelle*	Washer	*Unterlegscheibe*
3	**Z1AC014**	Rondella	*Rondelle*	Washer	*Unterlegscheibe*
4	**Z1AC016**	Dado	*Ecrou*	Nut	*Mutter tuerca*
5	**Z1AC017**	Dado	*Ecrou*	Nut	*Mutter tuerca*
6	**Z1AC029**	Racc. aspirazione pompa	*Raccord aspiration pompe*	Pump feeding pipe-fixing	*Ansauganschlusstück*
7	**Z1AC030**	Racc. mandata pompa	*Raccord refoulement pompe*	Pump inlet water pipe-fixing	*Pumpenabflussanschlusstück*
8	**Z1ID006**	Tubo mandata pompa	*Tuyau de refoulement pompe*	Pump inlet water pipe	*Pumpenabflusschlauch*
9	**610189 01**	Tubo aspirazione pompa	*Tuyau d'aspiration pompe*	Pump feeding pipe	*Pumpenansaugschlauch*
10	**620415 00**	Assieme pompa	*Ensemble pompe*	Pump assy	*Pumpe komplett*
11	**660557 00**	Tappo per collettore	*Bouchon pour collecteur*	Plug manifold	*Stopfen*
12	**281830 04**	Tubo alimentazione collettore	*Tuyau d'alimentation eau*	Spray bar feeding pipe	*Anschlusschlauch kollektor*
13	**660558 00**	Spruzzatore	*Gicleurs*	Sprayers	*Sprühdüsen*
14	**Z1ID042**	Anello O.R.	*Joint torique*	O-ring	*O-ring Junta*
15	**Z1ID043**	Isolamento pompa	*Coupelle pour pompe*	Pump cover insulation	*Pumpenisolation*
16	**650665 11**	Collettore	*Collecteur*	Spray bar	*Kollektor*

SD125 - SD125W

TAVOLA 3

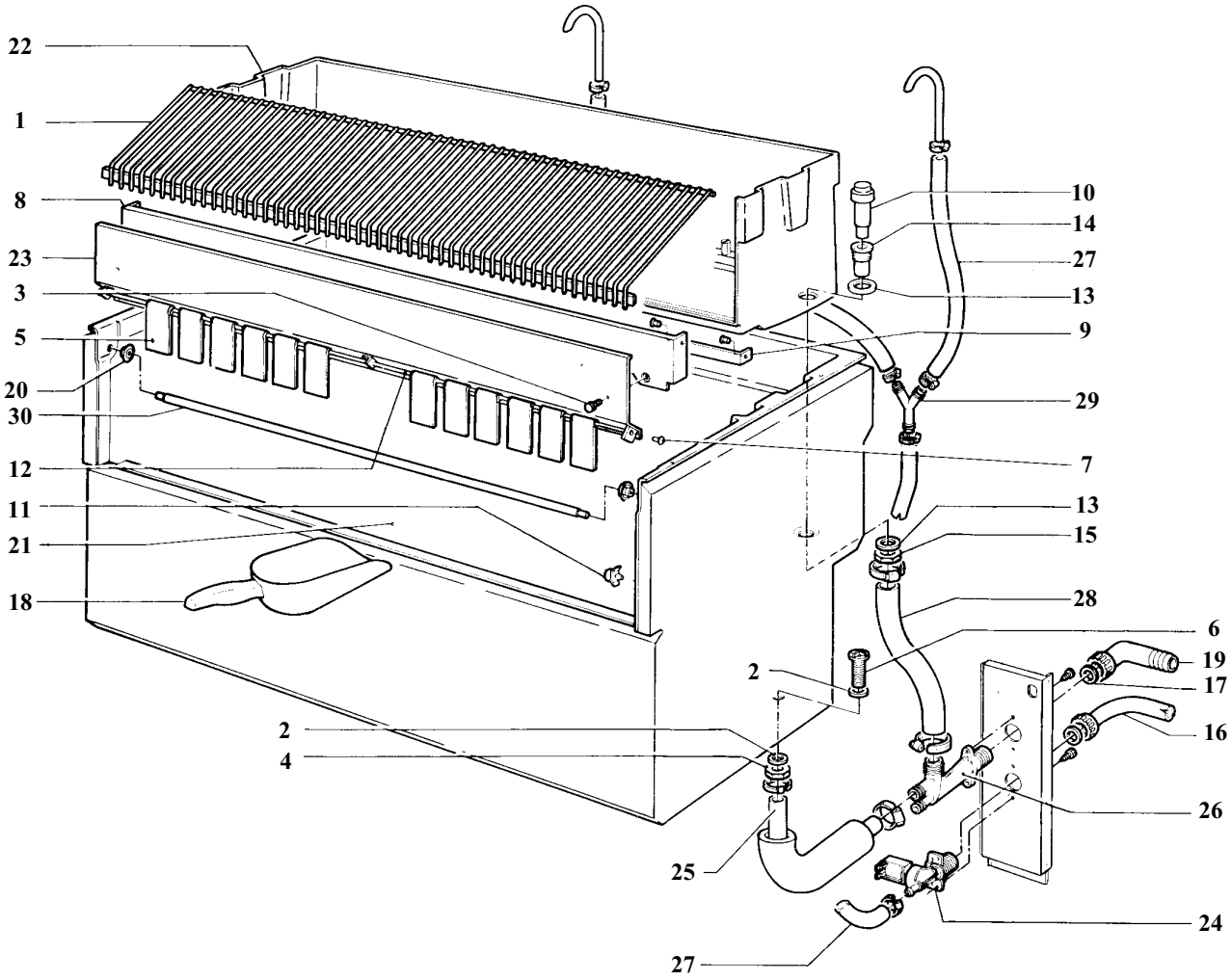

SD125 - SD125W

TAVOLA 3

N	COD.	DESCRIZIONE	*DENOMINATION*	DESCRIPTION	*BESCHREIBUNG*
1	Z1AC005	Griglia scorrimento cubetti	*Grille glissement glacons*	Cube deflector	*Abgleit grill*
2	Z1AC013	Rondella	*Rondelle*	Washer	*Unterlegscheibe*
3	Z1AC015	Vite godronata	*Vis moletée*	Knurled screw	*Schraube*
4	Z1AC016	Dado	*Ecrou*	Nut	*Mutter*
5	660629 00	Bandierina	*lamelle*	Spray curtain flap	*Abdeckklabbe*
6	Z1AC028	Racc. scarico contenitore	*Raccord vidange conteneur*	Bin exhaust pipe fitting	*Anschlüsstüch behälter*
7	650687 00	Bottone	*Bouton*	Bar pins	*Befestigung achse*
8	724323 00	Supporto evaporatore	*Support évaporateur*	Evaporator support	*Verdanpferauflange*
9	722146 00	Supporto cella	*Support chambre*	Bin support	*Halterung Innenbehälter*
10	660601 00	Troppo pieno	*Trop-plein*	Overflow exhaust pipe	*Überlauf*
11	Z1CE020	Fermatubo	*Attache de tube*	Pipe fixing	*Behälterthermostathalter*
12	Z1AC047	Tubo ottone	*Tube en laiton*	Spray curtain bar	*Abdeckklappenhalter*
13	Z1AC056	Rondella	*Rondelle*	Washer	*Unterlegscheibe*
14	Z1AC057	Raccordo scarico t. pieno	*Raccord écoulem. trop-plein*	Overflow exhaust	*Überlaufrohr*
15	Z1AC058	Dado	*Ecrou*	Nut	*Mutter*
16	060513 00	Tubo alimentazione acqua	*Tuyau d'alimentation eau*	Water Supply pipe	*Wasseranschlusschlauch*
17	640076 13	Guarnizione	*Joint*	Gasket	*Dichtung*
18	650146 00	Sessola	*Sasse*	Ice scoop	*Eisschaufel*
19	Z1AD011	Curva con ghiera	*Coude avec bague*	Elbow with ring nut	*Krümmer*
20	Z1AM025	Passatubo	*Passe-tuyau*	Retainer for door bar	*Halterung*
21	060524 05	Kit cella completa	*Kit chambre ensemble*	Kit bin assy	*Kit zelle Komplett*
22	Z1CE011	Cella interna	*Chambre intérieure*	Bin	*Zelle intern*
23	060524 10	Assieme tendina	*Ens. lamelles complet*	Curtain flap assy	*Jalouise komplett*
24	650105 54	Ing. acqua elettrovalvola	*Electrovanne*	Electric valve	*Electromagnetventil*
25	610189 00	Tubo scarico contenitore	*Tuyau vidange conteneur*	Bin exhaust pipe	*Behälterauslaufschlauch*
26	Z1ID025	Scarico acqua	*Ecoulement eau*	Water exhaust	*Wasserablauf*
27	281900 01	Tubo	*Tube*	Pipe	*Schlauch*
28	Z1ID028	Tubo	*Tube*	Pipe	*Schlauch*
29	Z1ID031	Raccordo	*Raccord*	Support	*Verbindung*
30	Z1AM019	Asta sportello	*Tige porte*	Door support bar	*Klappenachse*

SD125

TAVOLA 4

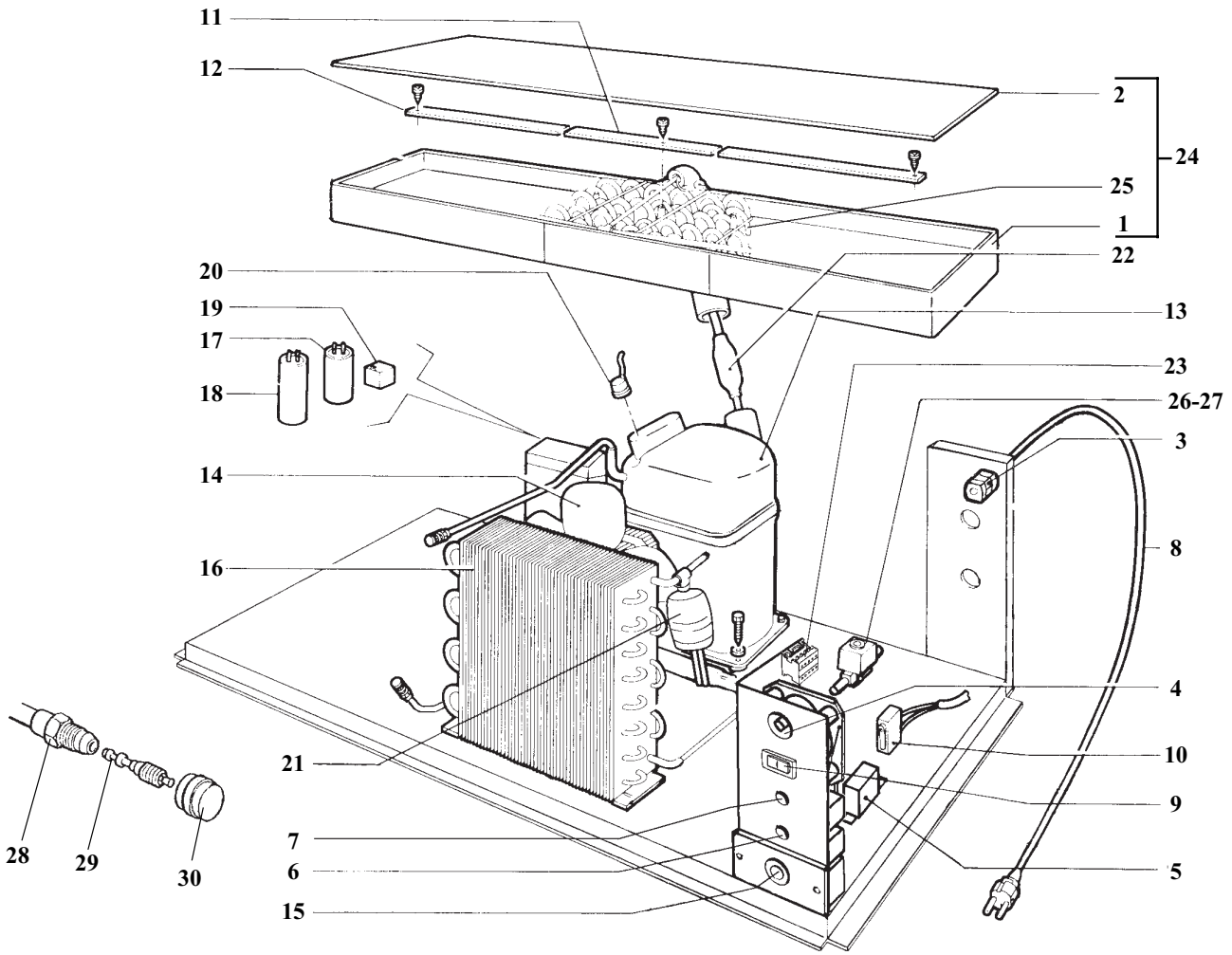

SD125					TAVOLA 4
N	**COD.**	**DESCRIZIONE**	***DENOMINATION***	**DESCRIPTION**	***BESCHREIBUNG***
1	660600 02	Guarnizione evaporatore	*Joint d'évaporateur*	Evaporator packing	*Verdampferdichtung*
2	650719 02	Coprievaporatore	*Cache-évaporateur*	Evaporator top	*Verdampferabdeckung*
3	630107 00	Fissacavo	*Serre-câble*	Cable terminal ring	*Kabelklemme*
4	620441 00	Timer	*Minuterie*	Timer	*Timer*
5	620075 02	Pressostato	*Pressostat*	Pressure gauge	*Druckwächter*
6	620209 00	Termostato contenitore	*Thermostat conteneur*	Bin thermostat	*Behälterthermostat*
7	620201 01	Termostato evaporatore	*Thermostat évaporateur*	Evaporator thermostat	*Verdampferthermostat*
8	630136 00	Cavo alimentazione	*Câble d'alimentation*	Electric cable	*Kabel*
9	620442 01	Commutatore	*Interupteur*	Switch	*Schalter*
10	620453 00	Interruttore luminoso	*Interrupteur lumineux*	Switch	*Schalter*
11	724324 02	Piastrina fiss. evaporatore	*Plaque fixat. évaporateur*	Evapor. fastening plate	*Befestigung Verdampfer*
12	724324 01	Piastrina fiss. evaporatore	*Plaque fixat. évaporateur*	Evapor. fastening plate	*Befestigung Verdampfer*
13	670099 04	Compressore	*Compresseur*	Compressor	*Kompressor*
14	620419 04	Motoventilatore	*Moto-ventilateur*	Electric fan	*Lüfter*
15	620231 01	Pressostato di sicurezza	*Pressostat de securité*	Pressure gauge-safety	*Sicherhcitsdruckwächter*
16	620436 00	Condensatore	*Condenseur*	Air condenser	*Kondensator*
17	620167 21	Condensatore di marcia	*Condenseur marche*	Running capacitor	*Gangkondensator*
18	620167 00	Condensatore avviamento	*Condenseur depart*	Start capacitor	*Starkondensator*
19	620057 46	Relè avviamento	*Relais démarrage*	Starting ralay	*Anlaufrelais*
20	620058 78	Protettore termico	*Protection thermique*	Thermic protector	*Thermoschutz*
21	670006 01	Filtro ceramico	*Filtre ceramique*	Filtre	*Filter*
22	784484 01	Assieme accumulatore isolato	*Ens. accumulateur*	Accumulator assy	*Sammler komplett*
23	630119 00	Contattore	*Contacteur*	Contactor	*Schatshütz*
24	784485 00	Assieme evaporatore	*Ensemble evaporateur*	Evaporator assy	*Verdampfer komplett*
25	784486 00	Piastra evaporatore	*Evaporateur*	Evaporator plate	*Verdampfer*
26	620306 46	Corpovalvola gas caldo	*Electrovanne gar corps*	Hot gas valve body	*Gas ventil körfer*
27	620306 48	Bobina valvola gas caldo	*Bobine vanne gaz chaud*	Hot gas valve coil	*Heissgaz ventil spule*
28	650109 00	Corpo valvola	*Corps de vanne*	Valve body	*Ventilgehause*
29	670012 00	Pistoncino valvola	*Piston*	Valve piston	*Ventilkolben*
30	650106 00	Cappuccio valvola	*Capuchon de vanne*	Valve cap	*Ventilklappe*

SD125W	TAVOLA 5

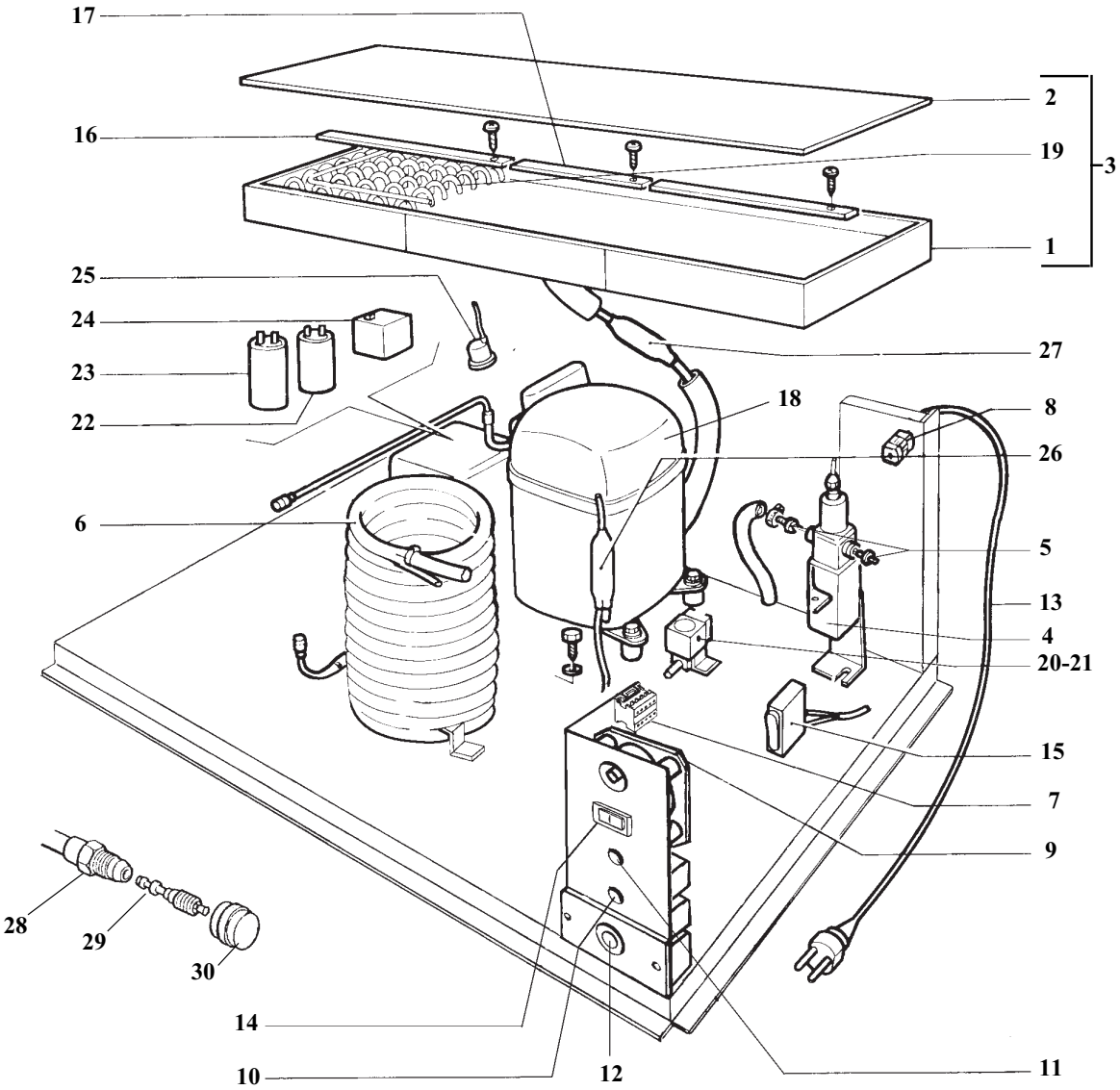

SD125W					TAVOLA 5
N	**COD.**	**DESCRIZIONE**	***DENOMINATION***	**DESCRIPTION**	***BESCHREIBUNG***
1	**660600 02**	Guarnizione evaporatore	*Joint d'évaporateur*	Evaporator packing	*Verdampferdichtung*
2	**650719 02**	Coprievaporatore	*Cache-évaporateur*	Evaporator top	*Verdampferabdeckung*
3	**784485 00**	Assieme evaporatore	*Ensamble evaporateur*	Evaporator assy	*Verdampfer komplett*
4	**620111 00**	Valvola pressostatica	*Soupape pressostatique*	Water valve	*Wasserventil*
5	**733204 00**	Portagomma	*Support caoutchouc*	Rubber fixing	*Halterung*
6	**620301 00**	Condensatore	*Condenseur*	Water condenser	*Verflussiger*
7	**630119 00**	Contattore	*Contacteur*	Contactor	*Schalts shütz*
8	**630107 00**	Fissacavo	*Serre-câble*	Cable terminal ring	*Kabelklemme*
9	**620441 00**	Timer	*Minuterie*	Timer	*Timer*
10	**620209 00**	Termostato contenitore	*Thermostat conteneur*	Bin thermostat	*Behälterthermostat*
11	**620201 01**	Termostato evaporatore	*Thermostat évaporateur*	Evaporator thermostat	*Verdampferthermostat*
12	**620231 01**	Pressostato di sicurezza	*Pressostat de securité*	Pressure gauge-safety	*Sicherheits druckwächter*
13	**630136 00**	Cavo alimentazione	*Câble d'alimentation*	Electric cable	*Kabel*
14	**620442 01**	Commutatore	*Interrupteur*	Switch	*Schalter*
15	**620453 00**	Interruttore luminoso	*Interrupteur lumineux*	Switch	*Schalter*
16	**724324 01**	Piastrina fiss. evaporatore	*Plaque fixation évaporat.*	Evapor, fastening plate	*Befestigung Verdampfer*
17	**724324 02**	Piastrina fiss. evaporatore	*Plaque fixation évaporat.*	Evapor, fastening plate	*Befestigung Verdampfer*
18	**670099 04**	Compressore	*Compresseur*	Compressor	*Kompressor*
19	**784486 00**	Piastra evaporatore	*Evaporateur*	Evaporator plate	*Verdampfer*
20	**620306 46**	Corpo valvola gas caldo	*Electrovanne gas corp*	Hot gas valve body	*Heissgazventil gehäuse*
21	**620306 48**	Bobina valvola gas caldo	*Electrovanne gas bobine*	Hot gas valve coil	*Heissgazventil spule*
22	**620167 21**	Condensatore di marcia	*Condenseur marche*	Running capacitor	*Gangkondensator*
23	**620167 00**	Condensatore avviamento	*Condenseur depart*	Start capacitor	*Startkondensator*
24	**620057 46**	Relé avviamento	*Relais de démarrage*	Starting relay	*Anlaufrelais*
25	**620058 78**	Protettore termico	*Protection thermique*	Thermic protector	*Thermoschutz*
26	**670006 01**	Filtro ceramico	*Filtre ceramique*	Filter	*Filter*
27	**784484 01**	Assieme accumulatore isolato	*Ens. accumulateur*	Accumulator assy	*Sammler komplett*
28	**650109 00**	Corpo Valvola	*Corps de vanne*	Valve body	*Ventilgehause*
29	**670012 00**	Pistoncino valvola	*Piston*	Valve piston	*Ventilkolben*
30	**650106 00**	Cappuccio valvola	*Capuchon de vanne*	Valve cap	*Ventilklappe*

SD125 - TABELLA COMPRESSORI - *TABLEAU COMPRESSEUR* - COMPRESSOR CHART - *KOMPRESSOR KARTE*							
Modello *Modele* Model *Modell*	Tensione *Volts* Tension *Spannung*	Mod. Compressore *Type compresseur* Compressor model *Kompressor typ*	Compressore *Compresseur* Compressor *Kompressor*	Relé *Relais* Relay *Relais*	Protettore *Protecteur* Protector *Schutzgerat*	Condens. di spunto *Capacité/demarrage* Start capacitor *Start kondensator*	Condens. di marcia *Capacité permanence* Run capacitor *Betreib kondensator*
SD125	**115/60/1**	-	-	-	-	-	
SD125	**230/60/1**	**CAJ9510Z**	**670099 09**	**620057 50**	**620058 81**	**620167 00**	**620167 21**
SD125	**230/50/1**	**CAJ9510Z**	**670099 04**	**620057 46**	**620058 78**	**620167 00**	**620167 21**

SD125 - TABELLA COMPONENTI ELETTRICI - *TABLEAU COMPOSANTS ELECTRIQUE* ELECTRIC COMPONENTS CHART - *ELEKTRISCHEKARTE*							
Modello *Modele* Model *Modell*	Tensione *Volts* Tension *Spannung*	Pompa *Pompe a eau* Water pump *Wasser pumpe*	Motore ventilatore *Moteur ventilateur* Fan motor only *Lufter motor*	Valv. ingr. acqua *V.e.m. arriveé eau* Water inlet valve *Wasserein. ventil*	Valvola gas caldo *V.E.M. gaz chauds* Hot gas valve *Heissgaz ventil*	Timer *Minuterie* Timer *Timer*	Contattore *Contacteur* Contactor *Schaltschutz*
SD125	**115/60/1**	-	-	-	-	-	-
SD125	**230/60/1**	**620415 01**	**620419 04** Fan Motor **620419 35** Fan Blade	**650105 54** (Air/Water)	**620306 48** - Coil **620306 46** - Body	**620441 00**	**630119 00**
SD125	**230/50/1**	**620415 00**	**620419 04** Fan Motor **620419 34** Fan Blade	**650105 54** (Air/Water)	**620306 48** - Coil **620306 46** - Body	**620441 00**	**630119 00**