DESPIECE TECNICO

Fry-tops a gas
Gas fry-tops
Fry-tops à gaz
Gas-griddle-platten
Fry-tops a gas
Fry-tops a gás

GAMA SNACK

Modelos:

FTG6-05
FTG6-10
FTG/C6-05
FTG/C6-10

Junio 2009 June
Revisado Julio 2011 / Revised July 2011

FAGOR

FAGOR INDUSTRIAL

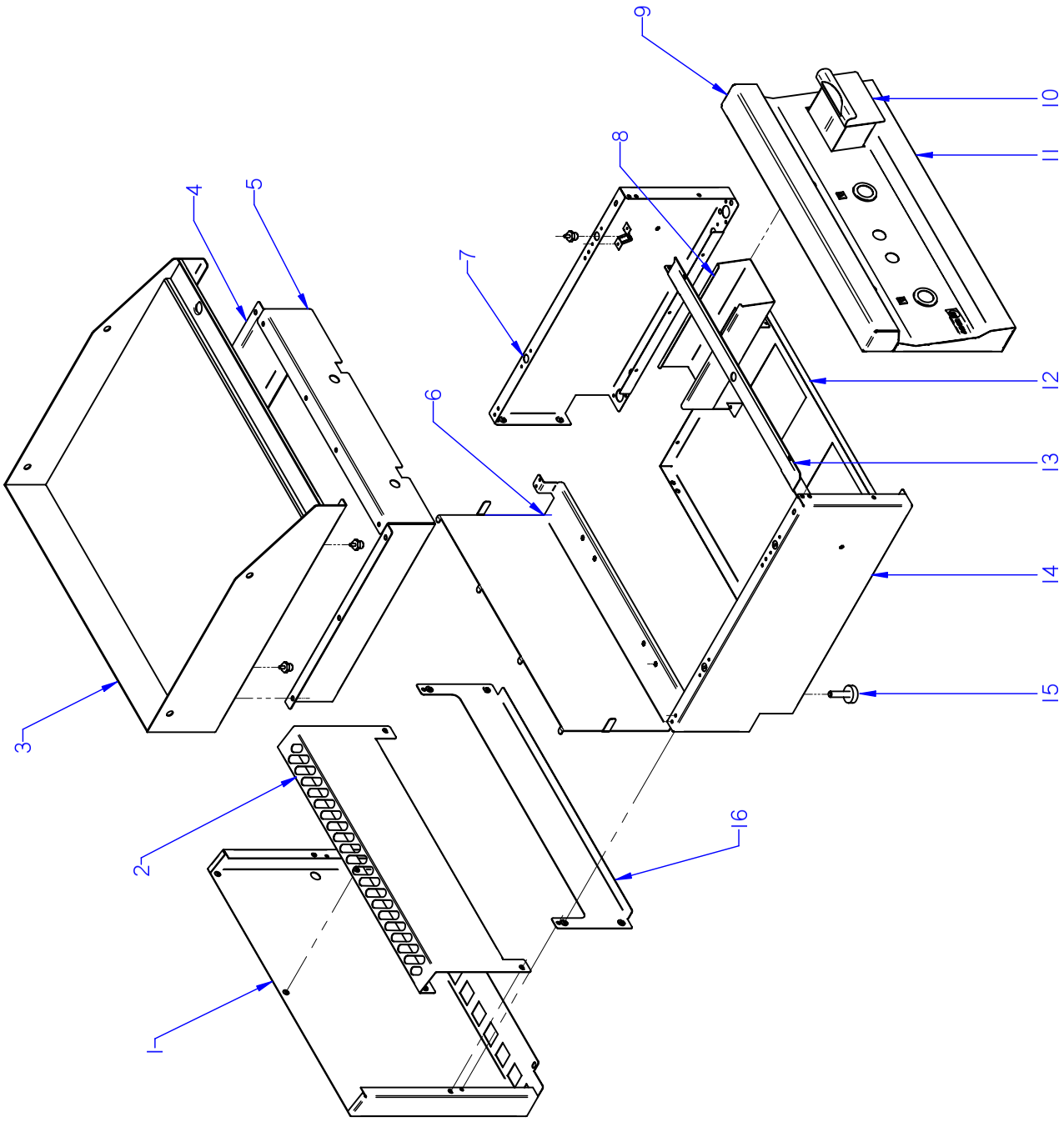

ITEM MARCADO EN COLOR = REPUESTO RECOMENDADO
COLOURED ITEM = RECOMMENDED SPARE PART

N plano	Firma	Fecha	Aparato	MUEBLE	Lamina	
C-2385		2009-06	FRY-TOP FTG6-05; -10; FTG/C6-05; -10		1	Fagor Industrial S.Coop. Onate FAGOR

MOD.	FRY-TOP	ZONA	MUEBLE / UNIT	PLANO	C-2385

ITEM	CODIGO	DENOMINACION	TEXTO	FTG6-05	FTG6-10	FTG/C6-05	FTG/C6-10				NOTAS
1	J142809000	PROTECC. CHIMENEA POST. 400	PROTECTION CHIMEMEY POS.	1	_	1	_				
1	J142812000	PROTECC. CHIMENEA POST. 600	PROTECTION CHIMEMEY POS.	_	1	_	1				
	Q419005000	REMACHE 4X8 ALMG3 / ALUMINIO	RIVET 4X8 ALMG3 / ALUMINIUM	2	2	2	2				
2	J142810000	PROTECCION CHIMENEA ANT. 400	PROTECTION CHIMENEY ANT	1	_	1	_				ELIMINADA 01.04.2010
2	J142829000	PROTECCION CHIMENEA FREID.	PROTECTION CHIMENEY	1	_	1	_				INTRODUC. 01.04.2010
2	J142813000	PROTECCION CHIMENEA ANT. 600	PROTECTION CHIMENEY ANT	_	1	_	1				ELIMINADA 01.04.2010
2	J142830000	PROTECCION CHIMENEA ANT. 600	PROTECTION CHIMENEY ANT	_	1	_	1				INTRODUC. 01.04.2010
	Q012031000	TORNILLO EXAGONAL M5x10 A304	HEXAGONAL BOLT M5x10 A304	4	4	4	4				
	Q302022000	ARANDELA 16x6x1,2 A304	WASHER 16x6x1.2 A304	4	4	4	4				
	Q221342000	REMACHE EXAGONAL M5	HEXAGONAL RIVET M5	3	3	3	3				
3	J105431000	PLANCHA SNACK G 400 L	PLATE SNACK G 400 L	1	_	_	_				
3	J105437000	PLANCHA SNACK G 400 R	PLATE SNACK G 400 R	1	_	_	_				
3	J105439000	PLANCHA SNACK G 600 L	PLATE SNACK G 600 L	_	1	_	_				
3	J105440000	PLANCHA SNACK G 600 R	PLATE SNACK G 600 R	_	1	_	_				
3	J105459000	PLANCHA SNACK G 400 L CD	PLATE SNACK G 400 L CD	_	_	1	_				
3	J105461000	PLANCHA SNACK G 600 L CD	PLATE SNACK G 600 L CD	_	_	_	1				
3	J105463000	PLANCHA SNACK G 600 L+R	PLATE SNACK G 600 L+R	_	_	_	1				
S/Nº	J105436000	APOYO PLANCHA FRY-TOP	PLATE SUPPORT	4	4	4	4				
	Q221342000	REMACHE EXAGONAL M5	HEXAGONAL RIVET M5	6	6	6	6				
4	J102602000	LATERAL CAJA COMBUSTION	COMBUSTION BOX SIDE	2	2	2	2				
	Q012042000	TORNILLO EXAGONAL M6X15	HEXAGONAL BOLT M6X15	6	6	6	6				
	Q302022000	ARANDELA 16X6X1.2 A.304	WASHER 16X6X1.2 A.304	6	6	6	6				
5	J102608000	FRONTAL FTG6-05	FRONT FTG6-05	1	_	_	_				
5	J102603000	FRONTAL FTG6-10	FRONT FTG6-10	_	1	_	_				
5	J102619000	FRONTAL FTG6-05 TERM.	FRONT FTG6-05 TERM.	_	_	1	_				
5	J102609000	FRONTAL FTG6-10 CD TERM.	FRONT FTG6-10 CD TERM.	_	_	_	1				
	Q012042000	TORNILLO EXAGONAL M6X15	HEXAGONAL BOLT M6X15	2	2	2	2				
	Q302022000	ARANDELA 16X6X1.2 A.304	WASHER 16X6X1.2 A.304	2	2	2	2				
6	J102614000	SOPORTE BURNER FTG6-05	SOPOR, BURNER FTG6-05	1	_	1	_				
6	J102615000	SOPORTE BURNER FTG6-10	SOPOR, BURNER FTG6-10	_	1	_	1				
	Q419005000	REMACHE 4X8 ALMG3 / ALUMINIO	RIVET 4X8 ALMG3 / ALUMINIUM	4	4	4	4				

MOD.	FRY-TOP	ZONA	MUEBLE / UNIT	PLANO	C-2385

ITEM	CODIGO	DENOMINACION	TEXTO	FTG6-05	FTG6-10	FTG/C6-05	FTG/C6-10				NOTAS
7	J002802000	PANEL LATERAL DERECHO	RIGHT SIDE PANEL	1	1	1	1				ELIMINADA 01.04.2010
7	J002834000	PANEL LATERAL DERECHO	RIGHT SIDE PANEL	1	1	1	1				INTRODUC. 01.04.2010
	Q221342000	REMACHE EXAGONAL M5	HEXAGONAL RIVET M5	1	1	1	1				
	Q419007000	REMACHE TUBULAR C/V D3.2X6	TUBULAR RIVET C/V D3.2X6	8	8	8	8				
	X010503000	CIERRE MUELLE	LOCK SPRING	4	4	4	4				ELIMINADA 01.04.2010
	Z442918000	CLIP CIERRE	LOCK SPRING	4	4	4	4				INTRODUC. 01.04.2010
8	J112602000	GUIA RECOGEGRASAS FRY-TOP	GREASE COLLECTION GUIDE	1	1	1	1				
	Q419005000	REMACHE 4X8 ALMG3 / ALUMINIO	RIVET 4X8 ALMG3 / ALUMINIUM	4	4	4	4				
9	J105432000	ANTERIOR FRY-TOP 400	FRONT FRY-TOP 400	1	_	1	_				
9	J105434000	ANTERIOR FRY-TOP 600	FRONT FRY-TOP 600	_	1	_	1				
10	J112810000	CAJA RECOGEGRASAS	GREASE COLLECTION TRAY	1	1	1	1				
11	J102802000	PORTAMANDOS COMPL. FTG6-05	CONTROL HOLDER FTG6-05	1	_	_	_				
11	J102804000	PORTAMANDOS COMPL. FTG6-10	CONTROL HOLDER FTG6-10	_	1	_	_				
11	J102824000	PORTAMANDOS COMP. FTG6-05 CD	CONTROL HOLDER FTG6-05 CD	_	_	1	_				
11	J102822000	PORTAMANDOS COMP. FTG6-10 CD	CONTROL HOLDER FTG6-10 CD	_	_	_	1				
	U022836000	ESCUDO FAGOR	FAGOR EMBLEM	1	1	1	1				
	Q221023000	CLIP SUJECIÓN RÁPIDA Ø5	RAPID CONNECT CLIP Ø5	2	2	2	2				
	Q419005000	REMACHE 4x8 ALMG3 / ALUMINIO	RIVET 4X8 ALMG3 / ALUMINIUM	6	6	6	6				
	Q012031000	TORNILLO EXAGONAL M5x10 A304	HEXAGONAL BOLT M5x10 A304	2	2	2	2				
	Q302022000	ARANDELA 16x6x1,2 A304	WASHER 16x6x1.2 A304	2	2	2	2				
12	J102611000	BASE INFERIOR FTG6-05 SNACK	LOWER BASE FTG6-05 SNACK	1	_	1	_				
12	J102612000	BASE INFERIOR FTG6-10 SNACK	LOWER BASE FTG6-10 SNACK	_	1	_	1				
	Q419005000	REMACHE 4X8 ALMG3 / ALUMINIO	RIVET 4X8 ALMG3 / ALUMINIUM	6	6	6	6				
13	J102616000	GUÍA PANEL FRY-TOP 400	GUIDE PANEL FRY-TOP 400	1	_	1	_				
13	J102617000	GUÍA PANEL FRY-TOP 600	GUIDE PANEL FRY-TOP 600	_	1	_	1				
	Q221342000	REMACHE EXAGONAL M5	HEXAGONAL RIVET M5	4	4	4	4				
	Q012031000	TORNILLO EXAGONAL M5x10 A304	HEXAGONAL BOLT M5x10 A304	4	4	4	4				

MOD.	FRY-TOP	ZONA	MUEBLE / UNIT	PLANO	C-2385

ITEM	CODIGO	DENOMINACION	TEXTO	FTG6-05	FTG6-10	FTG/C6-05	FTG/C6-10				NOTAS
14	J002801000	PANEL LATERAL IZQUIERDO	LEFT SIDE PANEL	1	1	1	1				ELIMINADA 01.04.2010
14	J002833000	PANEL LATERAL IZQUIERDO	LEFT SIDE PANEL	1	1	1	1				INTRODUC. 01.04.2010
	Q221342000	REMACHE EXAGONAL M5	HEXAGONAL RIVET M5	1	1	1	1				
	Q419007000	REMACHE TUBULAR C/V D3.2X6	TUBULAR RIVET C/V D3.2X6	8	8	8	8				
	X010503000	CIERRE MUELLE	LOCK SPRING	4	4	4	4				ELIMINADA 01.04.2010
	Z442918000	CLIP CIERRE	LOCK SPRING	4	4	4	4				INTRODUC. 01.04.2010
15	Z200107000	PATA REGULABLE	ADJUSTABLE LEG	4	4	4	4				
16	J112803000	PANEL POSTERIOR FRY-TOP 400	REAR PANEL FRY-TOP 400	1	_	1	_				
16	J112809000	PANEL POSTERIOR FRY-TOP 600	REAR PANEL FRY-TOP 600	_	1	_	1				
	Q419005000	REMACHE 4x8 ALMG3 / ALUMINIO	RIVET 4X8 ALMG3 / ALUMINIUM	4	4	4	4				

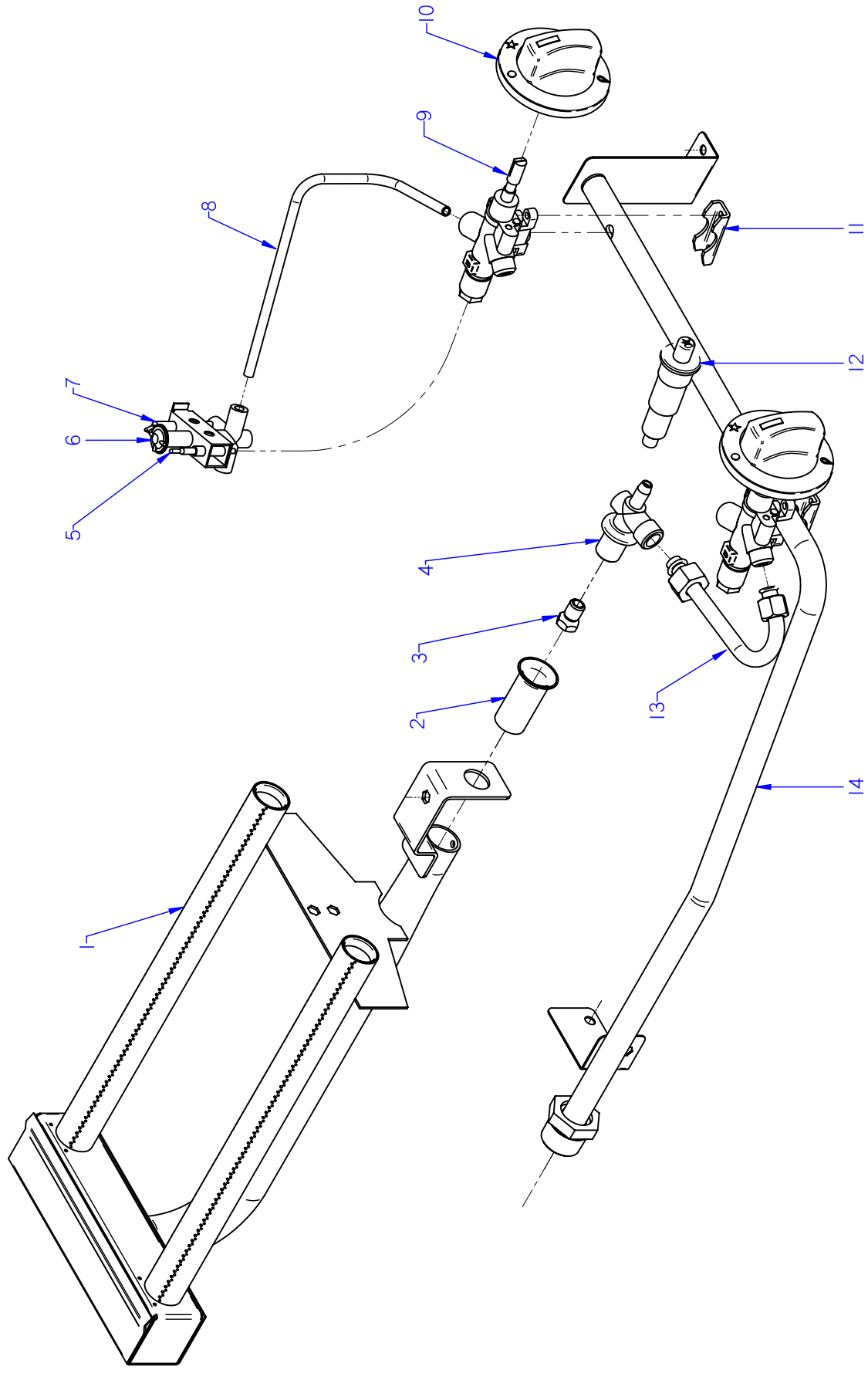

ITEM MARCADO EN COLOR = REPUESTO RECOMENDADO
COLOURED ITEM = RECOMMENDED SPARE PART

N plano	Firma	Fecha	Aparato		Lamina	
C-2386		2009-06	CONJUNTO FUNCIONAL FRY-TOP FTG6-05 / FTG6-10		2	Fagor Industrial S.Coop. Oñate

MOD.	FRY-TOP	ZONA	CONJUNTO FUNCIONAL / FUNCTIONAL UNIT	PLANO	C-2386

ITEM	CODIGO	DENOMINACION	TEXTO	FTG6-05	FTG6-10						
1	J105717000	QUEMADOR FRY-TOP SNACK	COMPLETE BURNER FTG-710	1	2						
	Q221342000	REMACHE EXAGONAL M5	HEXAGONAL RIVET M5	3	6						
	Q012031000	TORNILLO EXAGONAL M5X10 A.304	HEXAGONAL BOLT M5X10 A.304	3	6						
	Q302022000	ARANDELA 16X6X1.2 A.304	WASHER 16X6X1.2 A.304	3	6						
2	U325707000	REGULADOR DE AIRE	AIR REGULATOR	1	2						
	Q012032000	TORNILLO EXAGONAL M5X15 A.304	HEXAGONAL BOLT M5X15 A.304	1	2						
3	U122407000	TOBERA DE Ø 1,05 B.P.	NOZZLE Ø 1,05 B.P.	1	_						
3	R302400000	TOBERA DE Ø 1,65 G.N.	NOZZLE Ø 1,65 G.N.	1	_						
3	J142400000	TOBERA DE Ø 0,90 B.P.	NOZZLE Ø 0,90 B.P.	_	2						
3	R612400000	TOBERA DE Ø 1,35 G.N.	NOZZLE Ø 1,35 G.N.	_	2						
4	U265033000	PORTATOBERAS Ø10	NOZZLE HOLDER Ø10	1	2						
	Q223019000	TUERCA 3/8 GAS LATÓN	NUT 3/8 GAS BRASS	1	2						
	Q301323000	ARANDELA Ø25X17X6	WASHER Ø25X17X6	1	2						
5	U222130000	TERMOPAR L=600	THERMOCOUPLE L=600	1	2						
6	U322118000	PILOTO COMPLETO 100.062	COMPLETE PILOT LIGHT 100.062	1	2						
	Q012031000	TORNILLO EXAGONAL M5X10 A.304	HEXAGONAL BOLT M5X10 A.304	2	4						
7	X022131000	BUJIA	SPARK PLUG	1	2						
S/Nº	R613030000	CABLE BUJIA	SPARK PLUG CABLE	1	2						
S/Nº	U333003000	CABLE MASA ENCENDEDOR	LIGHTER EARTH CABLE	1	2						
8	J105009000	TUBO PILOTO FTG SNACK	PILOT PIPE FTG SNACK	1	2						ELIMINADA 01.10.2009
8	J105019000	TUBO PILOTO FTG SNACK	PILOT PIPE FTG SNACK	1	2						INTRODUC. 01.10.2009
S/Nº	U134323000	RACORD BICONO 6 958.031	BICONE CONNECTION 6 958.031	2	4						
9	J102101000	GRIFO ACAL 20705	TAP ACAL 20705	1	2						
10	J102102000	BOTON DE MANDO FTG SNACK	CONTROL BUTTON FTG SNACK	1	2						
11	Z982018000	BRIDA AMARRE TERMOSTATO	FASTENING FLANGE TERMOST	1	2						
	Q011353000	TORNILLO EXAGONAL M5X30	HEXAGONAL BOLT M5X30	2	4						
12	S113034000	PIEZOELECTRICO	PIEZOELECTRIC	1	2						
13	J105011000	CONDUC. QUEMADOR FTG SNACK	BURNER PIPE FTG SNACK	1	2						ELIMINADA 01.10.2009
13	J105018000	CONDUC. QUEMADOR FTG SNACK	BURNER PIPE FTG SNACK	1	2						INTRODUC. 01.10.2009

MOD.	FRY-TOP	ZONA	CONJUNTO FUNCIONAL / FUNCTIONAL UNIT	PLANO	C-2386

ITEM	CODIGO	DENOMINACION	TEXTO	FTG6-05	FTG6-10						
14	J105002000	CONDUCCION GENERAL FTG6-05	MAIN PIPE FTG6-05	1	_						ELIMINADA 01.10.2009
14	J105014000	CONDUCCION G. FTG6-05 SNACK	MAIN PIPE FTG6-05 SNACK	1	_						INTRODUC. 01.10.2009
14	J105004000	CONDUCCION GENERAL FTG6-10	MAIN PIPE FTG6-10	_	1						ELIMINADA 01.10.2009
14	J105016000	CONDUCCION GENERAL FTG6-10	MAIN PIPE FTG6-10	_	1						INTRODUC. 01.10.2009
	Q012031000	TORNILLO EXAGONAL M5X10 A.304	HEXAGONAL BOLT M5X10 A.304	4	6						
	Q302022000	ARANDELA Ø16X6X1.2 A.304	WASHER 16X6X1.2 A.304	4	4						
	Q221342000	REMACHE EXAGONAL M5	HEXAGONAL RIVET M5	2	2						

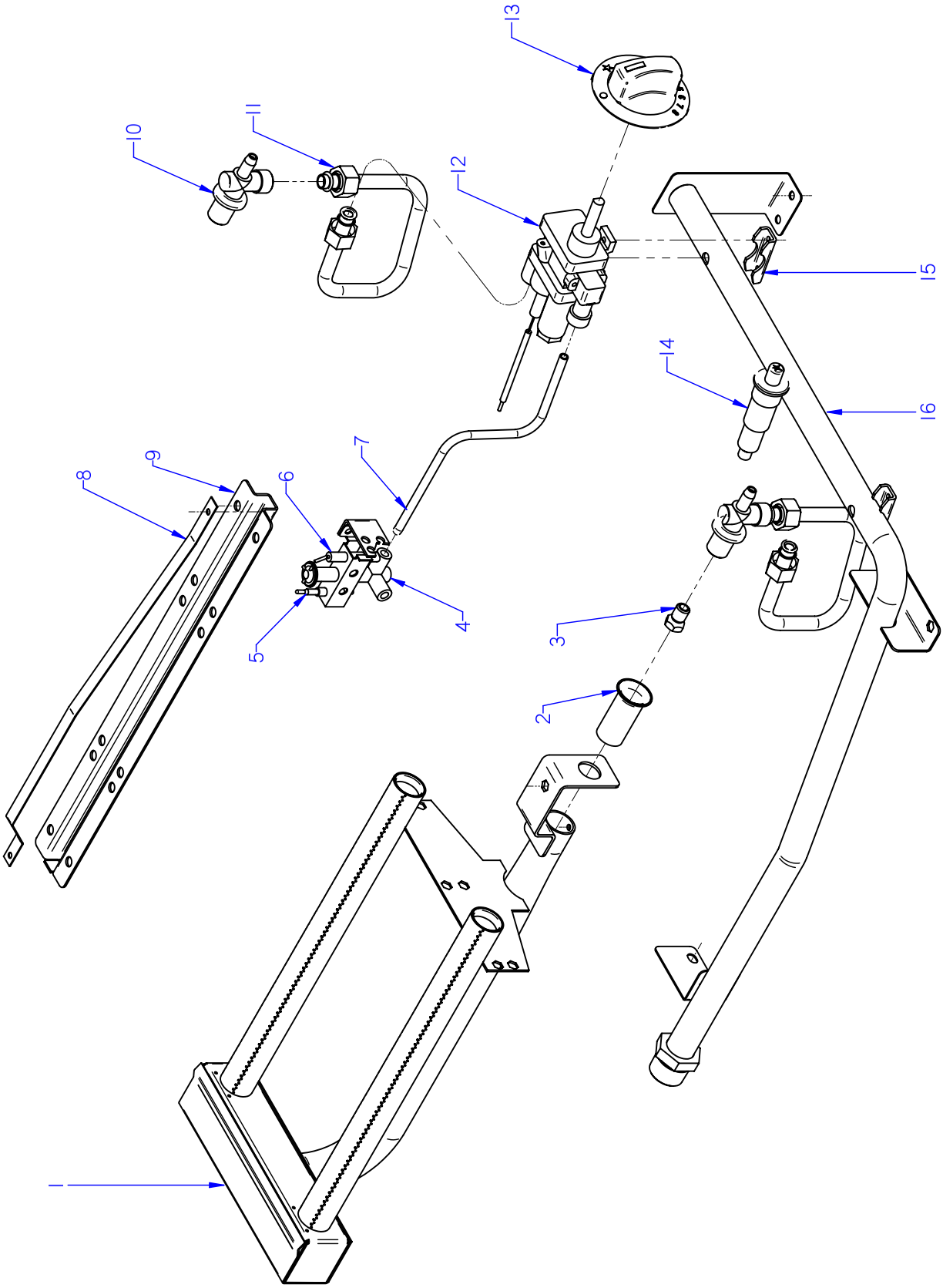

ITEM MARCADO EN COLOR = REPUESTO RECOMENDADO
COLOURED ITEM = RECOMMENDED SPARE PART

N plano	Firma	Fecha	Aparato	CONJUNTO FUNCIONAL	Lamina	
C-2386a		2011-07	FRY-TOP FTG/C6-05; FTG/C6-10		3	Fagor Industrial S.Coop. Onate FAGOR

MOD.	FRY-TOP	ZONA	CONJUNTO FUNCIONAL / FUNCTIONAL UNIT	PLANO	C-2386a

ITEM	CODIGO	DENOMINACION	TEXTO	FTG/C6-05	FTG/C6-10						
1	J105717000	QUEMADOR FRY-TOP SNACK	COMPLETE BURNER FTG-710	1	2						
	Q221342000	REMACHE EXAGONAL M5	HEXAGONAL RIVET M5	3	6						
	Q012031000	TORNILLO EXAGONAL M5X10 A.304	HEXAGONAL BOLT M5X10 A.304	3	6						
	Q302022000	ARANDELA 16X6X1.2 A.304	WASHER 16X6X1.2 A.304	3	6						
2	U325707000	REGULADOR DE AIRE	AIR REGULATOR	1	2						
	Q012032000	TORNILLO EXAGONAL M5X15 A.304	HEXAGONAL BOLT M5X15 A.304	1	2						
3	U122407000	TOBERA DE Ø 1,05 B.P.	NOZZLE Ø 1,05 B.P.	1	_						
3	R302400000	TOBERA DE Ø 1,65 G.N.	NOZZLE Ø 1,65 G.N.	1	_						
3	J142400000	TOBERA DE Ø 0,90 B.P.	NOZZLE Ø 0,90 B.P.	_	2						
3	R612400000	TOBERA DE Ø 1,35 G.N.	NOZZLE Ø 1,35 G.N.	_	2						
4	R202100000	CONJUNTO SOP. PILOTO COMP.	COMP. PILOT SUPP. UNIT	1	2						
5	U222130000	TERMOPAR L=600	THERMOCOUPLE L=600	1	2						
6	X022131000	BUJIA	SPARK PLUG	1	2						
S/Nº	R613030000	CABLE BUJIA	SPARK PLUG CABLE	1	2						
S/Nº	U333003000	CABLE MASA ENCENDEDOR	LIGHTER EARTH CABLE	1	2						
7	J105029000	TUBO PILOTO FTG SNACK	PILOT PIPE FTG SNACK	1	1						
7	J105028000	TUBO PILOTO FTG SNACK	PILOT PIPE FTG SNACK	_	1						
S/Nº	U134323000	RACORD BICONO 6 958.031	BICONE CONNECTION 6 958.031	1	2						
S/Nº	X205028000	BICONO Ø6	BICONE Ø6	1	1						
S/Nº	U195009000	MANGUITO EMPALME	SPLICE SLEEVE	1	1						
8	R162632000	SOPORTE BULBO	BULB HOLDER	1	1						
9	R162631000	BASE SOPORTE BULBO	SUPPORT BASE BULB	1	1						
	Q419005000	REMACHE 4X8 ALMG3 / ALUMINIO	RIVET 4X8 ALMG3 / ALUMINIUM	2	2						
	Q012041000	TORNILLO EXAGONAL M6X10 A.304	HEXAGONAL BOLT M6X10 A.304	4	4						
10	U265033000	PORTATOBERAS Ø10	NOZZLE HOLDER Ø10	1	2						
	Q223019000	TUERCA 3/8 GAS LATÓN	NUT 3/8 GAS BRASS	1	2						
	Q301323000	ARANDELA Ø25X17X6	WASHER Ø25X17X6	1	2						
11	J105025000	CONDUC. QUEMADOR FTG G600	BURNER PIPE FTG G600	1	2						
12	U742130000	TERMOSTATO MTZ-7200-0.5	THERMOSTAT MTZ-7200-0.5	1	2						
S/Nº	J022103000	BY-PASS 0,7 TERMOST MTZ-7200	BY-PASS 0,7 TERMOST MTZ-7200	1	2						
	Q307034000	JUNTA ESTANQUEIDAD	SEALING SEAL	1	2						

MOD.	FRY-TOP	ZONA	CONJUNTO FUNCIONAL / FUNCTIONAL UNIT	PLANO	C-2386a

ITEM	CODIGO	DENOMINACION	TEXTO	FTG/C6-05	FTG/C6-10						
13	J022102000	BOTON DE MANDO	CONTROL BUTTON	1	2						
14	S113034000	PIEZOELECTRICO	PIEZOELECTRIC	1	2						
15	Z982018000	BRIDA AMARRE TERMOSTATO	FASTENING FLANGE TERMOST	1	2						
	Q011353000	TORNILLO EXAGONAL M5X30	HEXAGONAL BOLT M5X30	2	4						
16	J105021000	CONDUCCION GENERAL FTG6-05	MAIN PIPE FTG6-05	1	_						
16	J105027000	CONDUCCION GENERAL FTG6-10	MAIN PIPE FTG6-10	_	1						
	Q012031000	TORNILLO EXAGONAL M5X10 A.304	HEXAGONAL BOLT M5X10 A.304	4	6						
	Q302022000	ARANDELA Ø16X6X1.2 A.304	WASHER 16X6X1.2 A.304	4	4						
	Q221342000	REMACHE EXAGONAL M5	HEXAGONAL RIVET M5	2	2						

MOD.	FRY-TOP	ZONA	VARIOS / MISCELLANEOUS	PLANO	

ITEM	CODIGO	DENOMINACION	TEXTO	FTG6-05	FTG6-10	FTG/C6-05	FTG/C6-10				NOTAS
	J106501000	FOLLETO INSTRUCC. FTG SNACK	INSTRUC. LEAFLET FTG SNACK	1	1	1	1				