Mod./Type: **GWD 40... - GWD 41...**
DWD 51... - DWD 59...

cod./num. 2532219.00

data/date: 29/05/2015

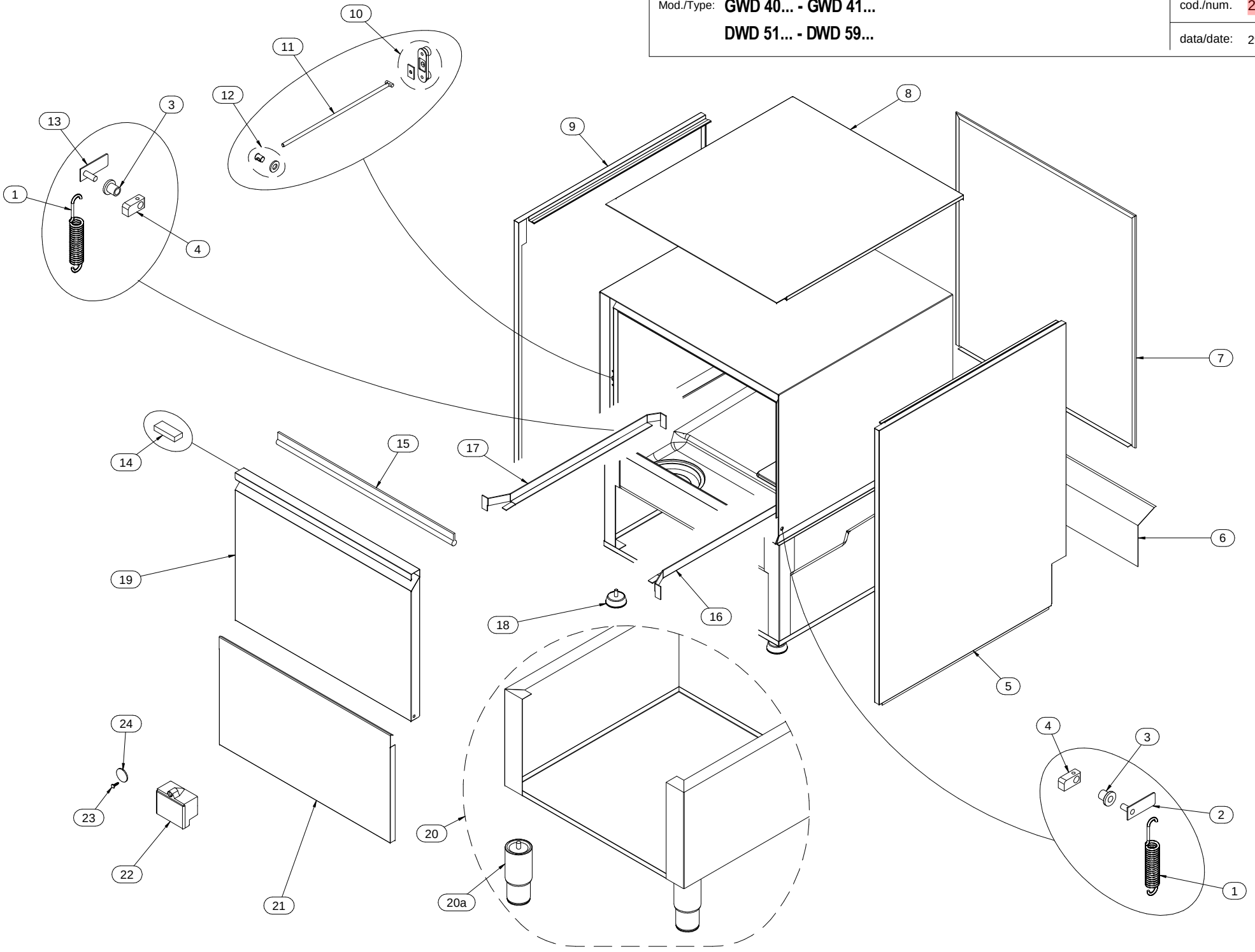

Mod.:	GWD 40… - GWD 41… DWD 51… - DWD 59…			cod. / num. 2532220.00 data / date 29/05/2015 rif. / ref. 2532219.00		RICAMBI CONSIGLIATI - RECOMMENDED SPARE PARTS - PIÈCES DÉTACHÉES RECOMMANDÉES - EMPFOHLENEN ERSATZTEILE	GWD 40…	GWD 41…	DWD 51…	DWD 59…	NOTE
POS.	DESCRIZIONE	DESCRIPTION	DENOMINATION	BENENNUNG	COD.		Q.ty				
1	MOLLA	SPRING	RESSORT	FEDER	260.018.00		1				
					260.017.00			1			
					260.012.00				1	1	
2	PERNO CERNIERA	JOINT STUD	GOUJON DE LA CHARNIÈRE	SCHARNIERBOLZEN	412.037.00		1	1	1	1	
3	BOCCOLA	PLAIN BEARING	PALIER LISSE	BUCHSE	451.099.00		2	2	2	2	
4	SUPPORTO	SUPPORT	SUPPORT	UNTERSTÜTZUNG	451.115.00		2	2	2	2	
5	FIANCO DX	RIGHT SIDE	CÔTÉ DROITE	SEITENWAND RECHTS	421.101.00		1				
					421.103.00			1			
					421.029.00				1		
					421.134.00					1	
6	PROTEZIONE	PROTECTION	PROTECTION	SCHUTZ	421.078.14		1	1			
					421.036.00				1	1	
7	PANNELLO POSTERIORE	BACK PANEL	PANNEAU POSTERIEUR	HINTERBRETT	421.084.14		1	1			
					421.033.00				1		
					421.136.00					1	
8	COPERTURA	COVER	COUVERTURE	ABDECKUNG	421.105.00		1	1			
					421.032.00				1		
					421.157.00					1	
9	FIANCO SX	LEFT SIDE	COTÉ GAUCHE	SEITENWAND LINKS	421.102.00		1				
					421.104.00			1			
					421.030.00				1		
					421.135.00					1	
10	PARACOLPI	BUFFER	PARA-CHOCS	BUMPERS	256.441.00		2	2	2	2	
11	ASTA PORTA	DOOR ROD	TIGE DE SUPPORT PORTE	VERSTEIGERUNG DES TÜR	412.094.00		2	2	2	2	
12	FERMO PORTA	DOORSTOP	ARRETE DE TIGE	TÜRVERRIEGELUNG	256.442.00		2	2	2	2	
13	PERNO CERNIERA	JOINT STUD	GOUJON DE LA CHARNIÈRE	SCHARNIERBOLZEN	412.038.00		1	1	1	1	
14	MAGNETE	MAGNET	MAGNÉTO	MAGNET	461.070.00		1	2	3	4	
15	GUARNIZIONE	SEAL	JOINT	DICHTUNG	453.007.00	*	1	1			
					453.010.00	*			1	1	
16	GUIDA CESTO DX	RIGHT RACK SLIDE	GLISSIÈRE DROITE PANIER	KORBSCHIENEN RECHTS	423.088.24		1	1			
					423.119.22				1	1	
17	GUIDA CESTO SX	LEFT RACK SLIDE	GLISSIÈRE GAUCHE PANIER	KORBSCHIENEN LINKS	423.089.24		1	1			
					423.118.22				1	1	
18	PIEDINO	FOOT	PIED	STELLFUSS	451.071.00		1	1		-	
					451.130.00				1	-	
19	PORTA	DOOR	PORTE	TÜR	411.067.00		1				
					411.066.00			1			
					411.042.00				1		
					411.109.00					1	
20	BASAMENTO	BASE UNIT	BASE	UNTERBAU	410.015.00		-	-	-	1	
20a	PIEDINO	FOOT	PIED	STELLFUSS	912.033.00		-	-	-	4	
21	PANNELLO FRONTALE	FRONTAL PANEL	PANNEAU FRONTAL	FRONTPLATTE	421.106.00		1	1			
					421.161.00				1	1	
22	CONTENITORE BRILLANTANTE	RINSE AGENT DISPENSER	DISTRIBUTEUR PRODUIT DE RINÇAGE	KLARSPÜLMITTELBEHÄLTER	451.072.00		1	1	-	-	
23	PERNO CHIUSURA	LINCHPIN FASTENER	PIVOT DE FERMETURE	VERSCHLUßSTIFT	441.082.00		1	1	-	-	
24	CHIUSURA	LOCK	FERMETURE	SCHLUSS	451.088.00		1	1	-	-	
25											
26											
27											
28											

Mod./Type:	GWD 40... DT - GWD 41... DT DWD 45...DT	cod./num.	2532225.00
		data/date:	27/05/2015

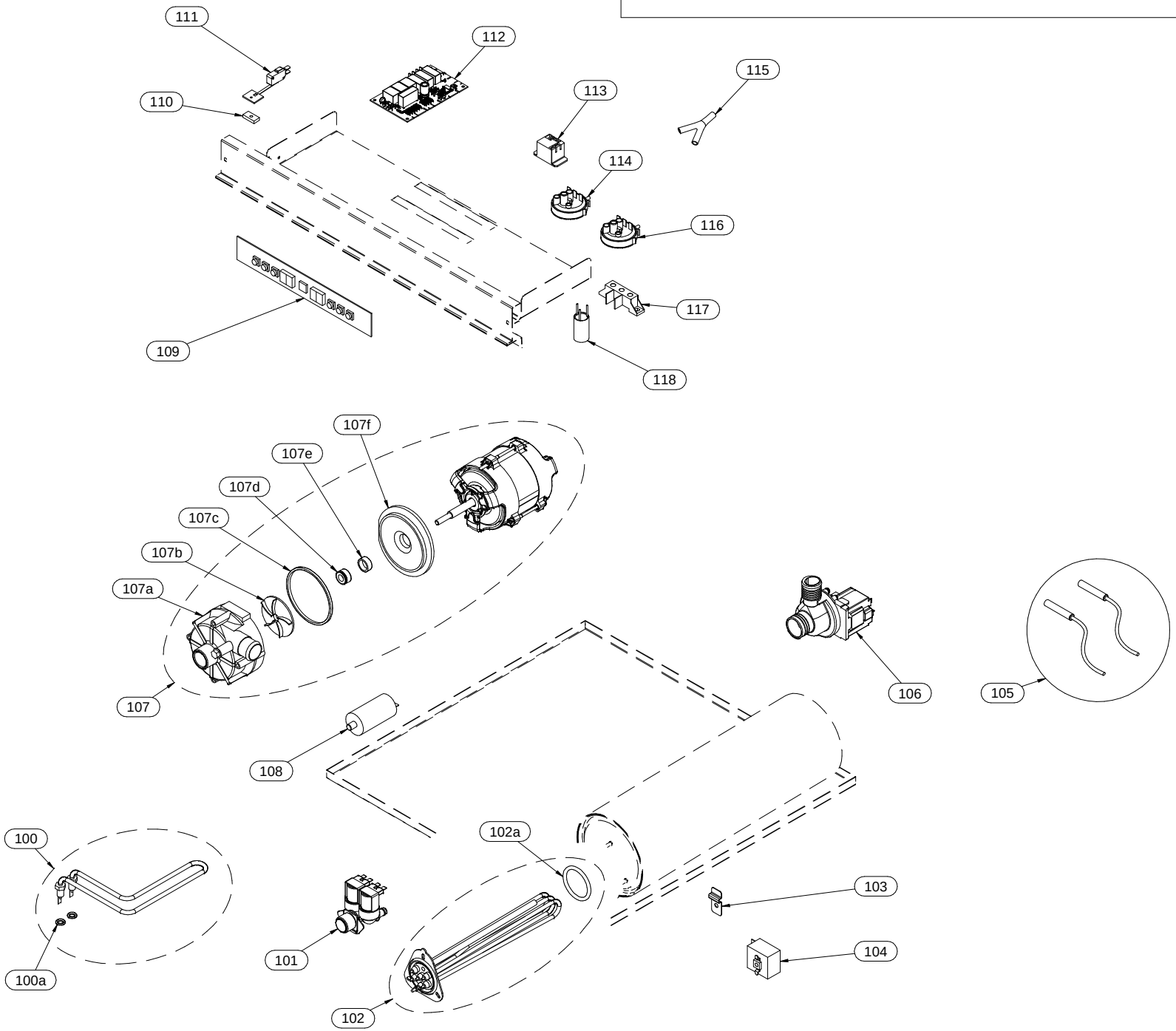

Mod.:	GWD 40…DT - GWD 41…DT DWD 45…DT			cod. / num. 2532226.00 data / date 27/05/2015 rif. / ref. 2532225.00		RICAMBI CONSIGLIATI - RECOMMENDED SPARE PARTS - PIÈCES DETACHÉES RECOMMANDÉES - EMPFOHLENEN ERSATZTEILE	GWD 40 DT	GWD 40 A DT	GWD 40 PS DT	GWD 40 A PS DT	GWD 41 DT	GWD 41 A DT	GWD 41 PS DT	GWD 41 A PS DT	DWD 45 DT	DWD 45 A DT	DWD 45 PS DT	DWD 45 A PS DT	NOTE
POS.	DESCRIZIONE	DESCRIPTION	DENOMINATION	BENENNUNG	COD.		Q. ty												
100	RESITENZA VASCA	SAFETY RELAY CONTACTS	RES. CUVE	TANKHEIZKORPER	465.012.00	*	1	1	1	1	1	1	1	1	1	1	1	1	
100a	GUARNIZIONE RESISTENZA	HEATING ELEMENT GASKET	JOINT DE LA RÉSISTENCE	WIDERSTAND-DICHTUNG	0835.26919.1		2	2	2	2	2	2	2	2	2	2	2	2	
101	ELETTROVALVOLA	SOLENOID VALVE	ELECTROVANNE	ELEKTROVENTIL	462.000.00	*	1	-	1	-	1	-	1	-	1	-	1	-	
					256.371.00	*	-	1	-	1	-	1	-	1	-	1	-	1	
102	RESISTENZA BOILER	BOILER RESISTANCE	RES. CHAUFFE- EAU	BOILERHEIZKORPER	465.011.00	*	1	1	1	1	1	1	1	1	1	1	1	1	
102a	GUARNIZIONE RESISTENZA	HEATING ELEMENT GASKET	JOINT DE LA RÉSISTENCE	WIDERSTAND-DICHTUNG	0835.53470.1		1	1	1	1	1	1	1	1	1	1	1	1	
103	FISSAGGIO SONDA VASCA	TANK PROBE FIXING	FIXATION SONDE CUVE	BEFESTIGUNG DER PROBE AM TANK	423.212.00		1	1	1	1	1	1	1	1	1	1	1	1	
104	TERMOSTATO SICUREZZA	SAFETY THERMOSTAT	THERMOSTAT DE SECURITÉ	SICHERHEITSTHERMOSTAT	461.071.00	*	1	1	1	1	1	1	1	1	1	1	1	1	
105	SONDE	PROBE ASSEMBLY	GROUPE SONDE	SONDEGRUPPE	468.120.00	*	1	1	1	1	1	1	1	1	1	1	1	1	
106	POMPA SCARICO	EXHAUST PUMP	ELECTROPOMPE DE VIDANGE	ABLAUF PUMPE	464.037.00		-	-	1	1	-	-	1	1	-	-	1	1	
107	ELETTROPOMPA	MOTOR PUMP	ELECTROPOMPE	ELEKTROPUMPE	464.082.00		1	1	1	1	1	1	1	1					
					464.113.00										1	1	1	1	
107a	COCLEA	HELIX SCREW	PELLETEUSE HELICOÏDALE	FÖRDERSCHNECKE	464.061.00		1	1	1	1	1	1	1	1					
					464.127.00										1	1	1	1	
107b	GIRANTE	IMPELLER	ROUE	IMPELLER	464.106.00		1	1	1	1	1	1	1	1					
					464.129.00										1	1	1	1	
107c	GUARNIZIONE	SEAL	JOINT	DICHTUNG	464.043.00		1	1	1	1	1	1	1	1					
					464.128.00										1	1	1	1	
107d	TENUTA ROTANTE	ROTATING SEAL	BOURRAGE DE POMPE	DREHDICHTUNG	464.044.00		1	1	1	1	1	1	1	1					
					464.130.00										1	1	1	1	
107e	TENUTA FISSA	FIXED SEAL	ÉTANCHÉITÉ FIXE	FIXE DICHTUNG	464.026.00		1	1	1	1	1	1	1	1	1	1	1	1	
107f	SUPPORTO COCLEA	HELIX SCREW SUPPORT	SUPPORT PELLETEUSE HELICOÏDALE	ABSTÜTZUNG FÜR FÖRDERSCHNECKE	464.060.00		1	1	1	1	1	1	1	1					
					464.131.00										1	1	1	1	
108	CONDENSATORE	CONDENSER	CONDENSEUR	KONDENSATOR	464.042.00		1	1	1	1	1	1	1	1					
					464.016.00										1	1	1	1	
109	USER SCHEDA TIMER	USER TIMER CARD	FICHE MINUTERIE UTILISATEUR	USER ZEITSCHALTER KARTE	256.372.00	*	1	1	1	1	1	1	1	1	1	1	1	1	
110	MAGNETE	MAGNET	MAGNÉTO	MAGNET	461.043.00		1	1	1	1	1	1	1	1	1	1	1	1	
111	MICRO PORTA	DOOR MICROSWITCH	MICROINTERRUPTEUR PORTE	TUERKONTAKT SCHALTER	412.075.00	*	1	1	1	1	1	1	1	1	1	1	1	1	
112	SCHEDA RELÉ	RELAY BOARD	CARTE DE RELAIS	RELAISPLATINE	256.445.00	*	1	1	1	1	1	1	1	1	1	1	1	1	
113	RELÉ	RELAY	RELAY	RELAIS	461.083.00	*	-	-	-	-	-	-	-	-	1	1	1	1	
114	PRESSOSTATO	PRESSURE SWITCH	PRESSOSTAT	NIVEAUSCHALTER	462.003.00	*	1	1	1	1	1	1	1	1	1	1	1	1	
115	RACCORDO A Y	Y PIECE UNION FOR AIR SWITCH	RACCORD À Y	Y ANSCHLUSS	451.116.00		-	-	1	1	-	-	1	1	-	-	1	1	
116	PRESSOSTATO	PRESSURE SWITCH	PRESSOSTAT	NIVEAUSCHALTER	462.013.00	*	-	-	1	1	-	-	1	1	-	-	1	1	
117	MORSETTIERA	TERMINAL BOARD	BORNES	KLEMMENBRETT	463.026.00		1	1	1	1	1	1	1	1	1	1	1	1	
118	FILTRO ANTIDISTURBO	LIMITER FILTER	FILTRE DE BRUIT	ANTIJAMMING FILTER	464.067.00		1	1	1	1	1	1	1	1	1	1	1	1	
119																			
120																			
121																			
122																			
123																			
124																			
125																			
126																			
127																			
128																			
129																			
130																			
131																			
132																			
133																			

Mod./Type: **DWD 45...**
DW 5.... - DWD 51... - DWD 59... - HT 5...

cod./num. 2532183.00

data/date: 25/05/2015

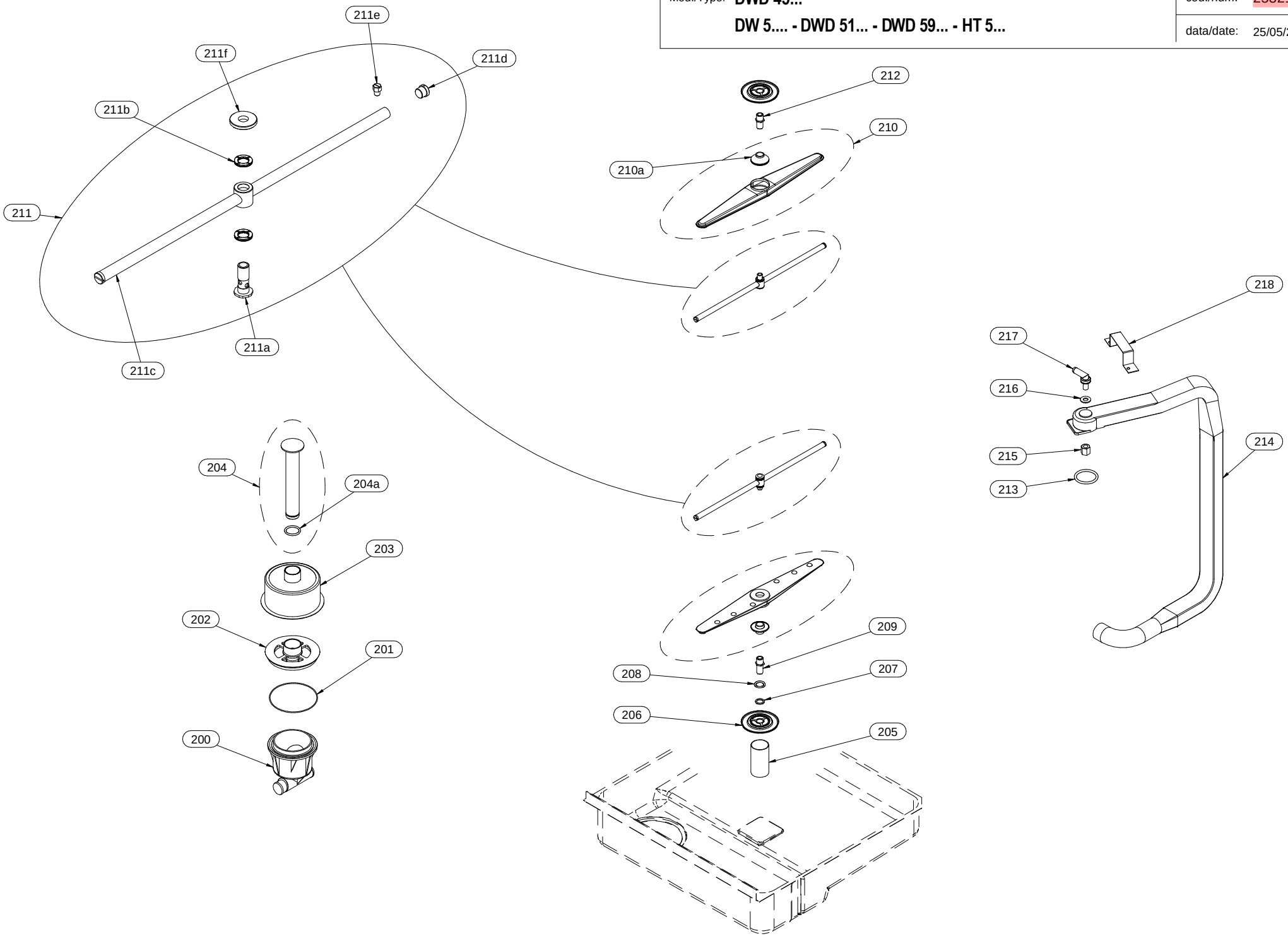

Mod.:	DWD 45 DW 5... - DWD 51... - DWD 59... - HT 5...			cod. / num. 2532184.00 data / date 25/05/2015 rif. / ref. 2532183.00		RICAMBI CONSIGLIATI - RECOMMENDED SPARE PARTS - PIÈCES DÉTACHÉES RECOMMANDÉES - EMPFOHLENEN ERSATZTEILE	DWD 45...	DW 5...	DWD 51...	DWD 59...	HT 5...	NOTE
POS.	DESCRIZIONE	DESCRIPTION	DENOMINATION	BENENNUNG	COD.		Q. ty					
200	SCARICO	DRAIN	VIDANGE	ABLAUF	451.025.00		1	1	1	1	1	
201	GUARNIZIONE	WASHER	GUARNITURE	DICHTUNGSRING	0835.35101.1		1	1	1	1	1	
202	GHIERA	FERRULE	VIROLE	NUTMUTTER	451.022.14		1	1	1	1	1	
203	FILTRO SCARICO	EXHAUST FILTER	FILTRE D'ECHAPPEMENT	ABLAUFFILTER	412.260.00		1					
					412.055.14			1	1	1		
					412.056.14						1	
204	TROPPOPIENO	OVERFLOW PIPE	TROP-PLEIN	ÜBERLAUF	410.282.00		1					
					410.283.00			1	1	1		
					410.284.00						1	
204a	GUARNIZIONE	WASHER	GUARNITURE	DICHTUNGSRING	0835.26266.1	*	1	1	1	1	1	
205	RACCORDO	CONNECTOR	RACCORD	ANSCHLUSS	431.103.00		1					
					431.052.00			1	1	1		
					431.080.00						1	
206	PARZIALIZZATORE	SPLITTER	RONDELLE DE PARTIALISATION	ABZWEIGER	451.132.00		2					
					424.006.00			2	2	2	2	
207	PARZIALIZZATORE	SPLITTER	RONDELLE DE PARTIALISATION	ABZWEIGER	423.193.00		1					
					423.058.00			1	1	1	1	
208	GUARNIZIONE	WASHER	GUARNITURE	DICHTUNGSRING	0835.17124.1		-	-	1	1	1	
209	PERNO LAVAGGIO INF.	LOWER WASHING PIVOT	GOUJON LAVAGE INFÉRIEUR	STIFT UNTERER SPÜLUNG	441.059.00		1					
					441.085.00			1				
					412.033.00				1	1		
					412.079.00						1	
210	GIRANTE LAVAGGIO	WASH ARM	BRAS DE LAVAGE	WASCHARM	256.375.00		2					
					256.373.00			2	2	2		
					256.374.00						2	
210a	SUPPORTO GIRANTE	IMPELLER SUPPORT	SUPPORT BRAS DE LAVAGE	LAUFRADHALTERUNG	451.066.00		2					
					451.021.13			2	2	2	2	
211	GIRANTE RISCIACQUO	RINSE IMPELLER	GROUPE BRAS RINÇAGE	AUSSPÜLUNGSARMGRUPPE	412.275.00		2					
					412.199.00			2	2	2		
					412.200.00						2	
211a	PERNO RISCIACQUO	RINSING PIN	GOUJON RINÇAGE	SPUELSTIFT LB LS	441.057.00		2	2	2	2	2	
211b	RONDELLA RISCIACQUO	RINSING GASKET	RONDELLE RINÇAGE	AUSSPÜLUNGSUNTERLEGSCHEIBE	451.024.00		4	4	4	4	4	
211c	GIRANTE RISCIACQUO	RINSE IMPELLER	GROUPE BRAS RINÇAGE	AUSSPÜLUNGSARMGRUPPE	412.034.00		2	2	2	2		
					412.083.00						2	
211d	TAPPO RISCIACQUO	RINSE PLUG	BOUCHON RINÇAGE	AUSSPÜLUNGSSTÖPSEL	451.028.00		4	4	4	4	4	
211e	UGELLO RISCIACQUO	RINSE INJECTOR	INJECTEUR DE RINCAGE	NACHSPUELDUESE	441.040.00		10	12	12	12	14	
211f	GHIERA	FERRULE	VIROLE	NUTMUTTER	441.044.00		2	2	2	2	2	
212	PERNO LAVAGGIO SUP.	UPPER WASHING PIN	GOUPILLE LAVAGE SUPERIEURE	OBERER STIFT WASCHHVORGANG	441.094.00		1					
					441.041.00			1	1	1	1	
213	GUARNIZIONE	WASHER	GUARNITURE	DICHTUNGSRING	0835.35440.1		1	1	1	1	1	
214	TUBO MANDATA	DELIVERY PIPE	TUYAU DE REFOULEMENT	ZULEITUNGSROHR	412.170.00		1	1	1			
					412.171.00					1		
					412.173.00						1	
215	DADO	NUT	ÈCROU	MUTTER	441.045.00		1	1	1	1	1	
216	GUARNIZIONE	WASHER	GUARNITURE	DICHTUNGSRING	0840.25122.0		1	1	1	1	1	
217	RACCORDO	CONNECTOR	RACCORD	ANSCHLUSS	412.032.15		1	1	1	1	1	
218	FISSAGGIO	FIXING	FIXAGE	BEFESTIGUNG	423.064.00		1	1	1	1	1	
219												
220												
221												
222												
223												
224												

Mod./Type:	**GW 35... - GW 4... - GWD 4... - DWD 45...** **DW 5... - DWD 51... - DWD 59...**	cod./num.	2532185.00
		data/date:	22/06/2015

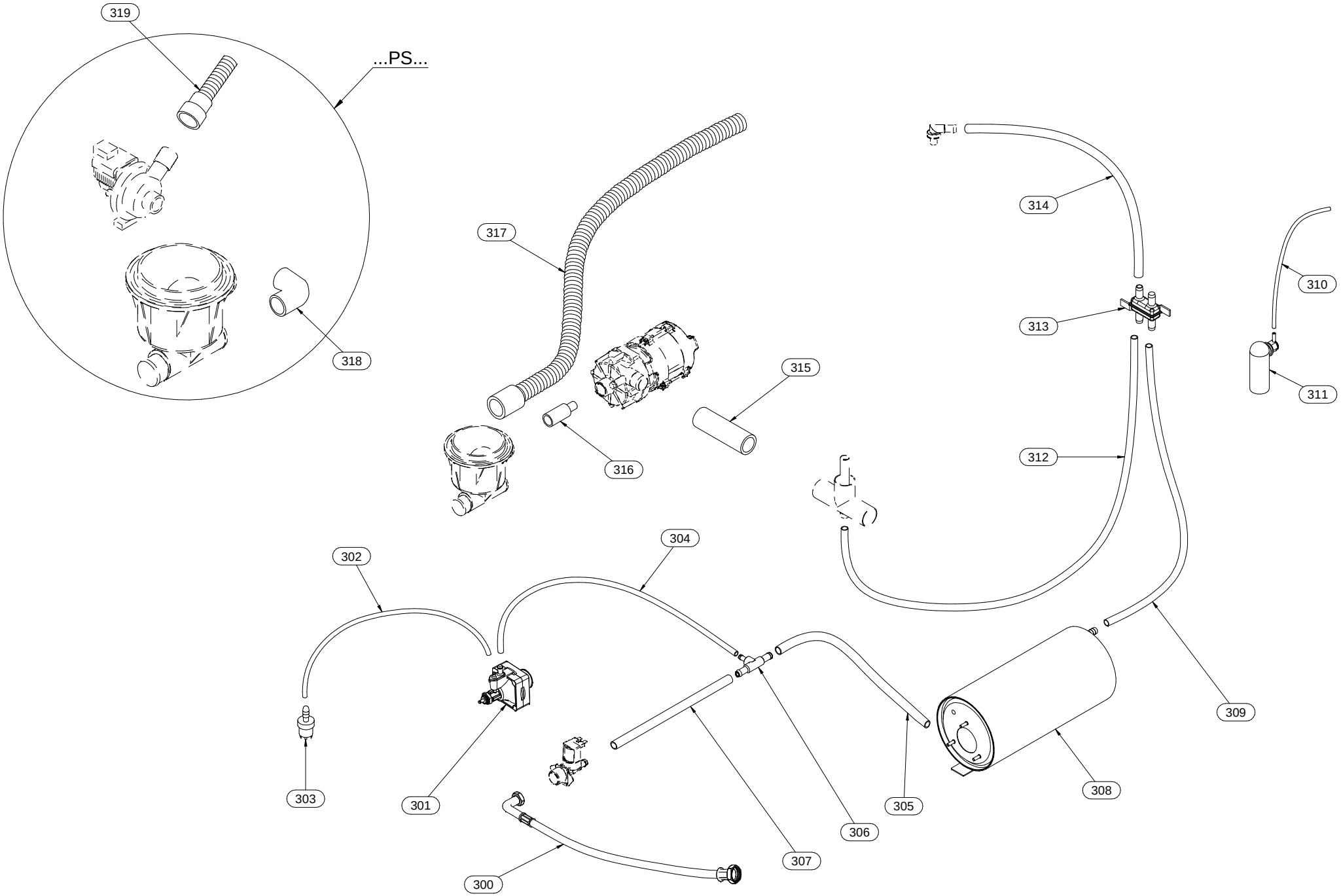

Mod.:	GW 35... - GW 4... - GWD 4... - DWD 45... DW 5... - DWD 51... - DWD 59...			cod. / num. 2532186.00 data / date 22/06/2015 rif. / ref. 2532185.00		RICAMBI CONSIGLIATI - RECOMMENDED SPARE PARTS - PIÈCES DETACHEES RECOMMANDÉES - EMPFOHLENEN ERSATZTEILE	GW 35...	GW 35 PS...	GW 40...	GW 40 PS...	GW 41...	GW 41 PS...	GWD 40...	GWD 40 PS...	GWD 41...	GWD 41 PS...	DWD 45...	DWD 45 PS...	DW 5.....;	DW 5...PS	DWD 51...	DWD 51 PS...	DWD 59....	DWD 59 PS....	NOTE
POS.	DESCRIZIONE	DESCRIPTION	DENOMINATION	BENENNUNG	COD.		Q. ty																	
300	TUBO CARICO	INLET HOSE	TUYAU DE CHARGEMENT	BELASTUNG-ROHR	452.033.00		1	1	1	1	1	1	1	1	1	1	1	1	1	1	1	1	1	1	
301	DOSATORE BRILLANTANTE	RINSE AID ADDITIVE DISPENSER	DOSEUR PRODUIT DE RINÇAGE	NACHSPUELMITTELGERAET	471.011.00	*	1	1	1	1	1	1	1	1	1	1	1	1	1	1	1	1	1	1	
302	TUBO 4x6	PIPE D.4x6	TUYAU 4x6	ROHR 4x6	452.039.00		1	1	1	1	1	1	1	1	1	1	1	1	1	1	1	1	1	1	
303	FILTRO ASPIRAZIONE	SUCTION FILTER	FILTRE ASPIRATION	ANSAUGFILTER	451.048.00		1	1	1	1	1	1	1	1	1	1	1	1	1	1	1	1	1	1	
304	TUBO 8x15	PIPE 8x15	TUYAU 8x15	ROHR 8x15	452.157.00		1	1																	
					452.125.00				1	1	1	1	1	1	1	1									
					452.038.00												1	1	1	1	1	1	1	1	
305	TUBO 12x19	PIPE 12x19	TUYAU 12x19	ROHR 12x19	452.086.00		1	1																	
					452.041.00				1	1	1	1	1	1	1	1									
					452.136.00												1	1	1	1	1	1	1	1	
306	RACCORDO A T	T-FITTING	RACCORD À T	T-STÜCK	451.133.00		1	1	1	1	1	1	1	1	1	1	1	1	1	1	1	1	1	1	
307	TUBO 12x19	PIPE 12x19	TUYAU 12x19	ROHR 12x19	452.160.00		1	1																	
					452.126.00				1	1	1	1	1	1	1	1									
					452.141.00												1	1					1	1	
					452.138.00														1	1	1	1			
308	BOILER	RINSE TANK	GROUPE CHAUDIERE	BOILERGRUPPE	410.387.00		1	1																	
					410.279.00				1	1	1	1	1	1	1	1									
					410.280.00												1	1	1	1	1	1	1	1	
309	TUBO 12x19	PIPE 12x19	TUYAU 12x19	ROHR 12x19	452.076.00		1	1																	
					452.077.00				1	1	1	1	1	1	1	1									
					452.117.00												1	1							
					452.105.00														1	1	1	1	1	1	
310	TUBO 4x8	PIPE 4x8	TUYAU 4x8	ROHR 4x8	452.158.00		1	1																	
					452.054.00				1	1	1	1													
					452.088.00								1	1											
					452.089.00										1	1									
					452.139.00												1	1							
					452.099.00														1	1					
					452.044.00																1	1			
					452.120.00																		1	1	
311	CAMPANA PRESSOSTATO	AIR TRAP	CLOCHE DU PRESSOSTAT	DRUCKWAECHTER	451.059.00		1	1	1	1	1	1	1	1	1	1									
					451.083.00												1	1							
					451.036.00														1	1	1	1	1	1	
312	TUBO 12x19	PIPE 12x19	TUYAU 12x19	ROHR 12x19	452.117.00		1	1																	
					452.041.00				1	1	1	1	1	1	1	1									
					452.142.00												1	1							
					452.040.00														1	1	1	1	1	1	
313	RIPARTITORE	DISTRIBUTOR	RÉPARTITEUR	VERTEILER	451.042.00		1	1	1	1	1	1	1	1	1	1	1	1	1	1	1	1	1	1	
314	TUBO 12x19	PIPE 12x19	TUYAU 12x19	ROHR 12x19	452.161.00		1	1																	
					452.041.00				1	1			1	1			1	1	1	1					
					452.059.00						1	1			1	1							1	1	
					452.136.00																1	1			
315	RACCORDO MANDATA	DELIVERY FITTING	RACCORD DE REFOULEMENT	ZULEITUNGSANSCHLUSS	452.151.00		1	1																	
					452.065.00				1	1	1	1	1	1	1	1									
					452.066.00												1	1							
					452.031.00														1	1	1	1	1	1	
316	RACCORDO ASPIRAZIONE	SUCTION FITTING	RACCORD ASPIRATION	ABSAUGANSCHLUSS	452.159.00		1	1																	
					452.066.00				1	1	1	1	1	1	1	1									
					452.123.00												1	1							
					452.030.00														1	1	1	1	1	1	
317	TUBO SCARICO	EXHAUST PIPE	TUYAU D'ÉCHAPPEMENT	ABLAUFROHR	452.034.00		1	-	1	-	1	-	1	-	1	-	1	-	1	-	1	-	1	-	
318	RACCORDO SCARICO	DISCHARGE CONNECTION	COUPLEUR DE VIDANGE	ABLAUFANSCHLUSS	452.067.00		-	1	-	1	-	1	-	1	-	1	-	1	-	1	-	1	-	1	
319	TUBO SCARICO	EXHAUST PIPE	TUYAU D'ÉCHAPPEMENT	ABLAUFROHR	452.042.00		-	1	-	1	-	1	-	1	-	1	-	1	-	1	-	1	-	1	
320																									
321																									
322																									
323																									
324																									
325																									