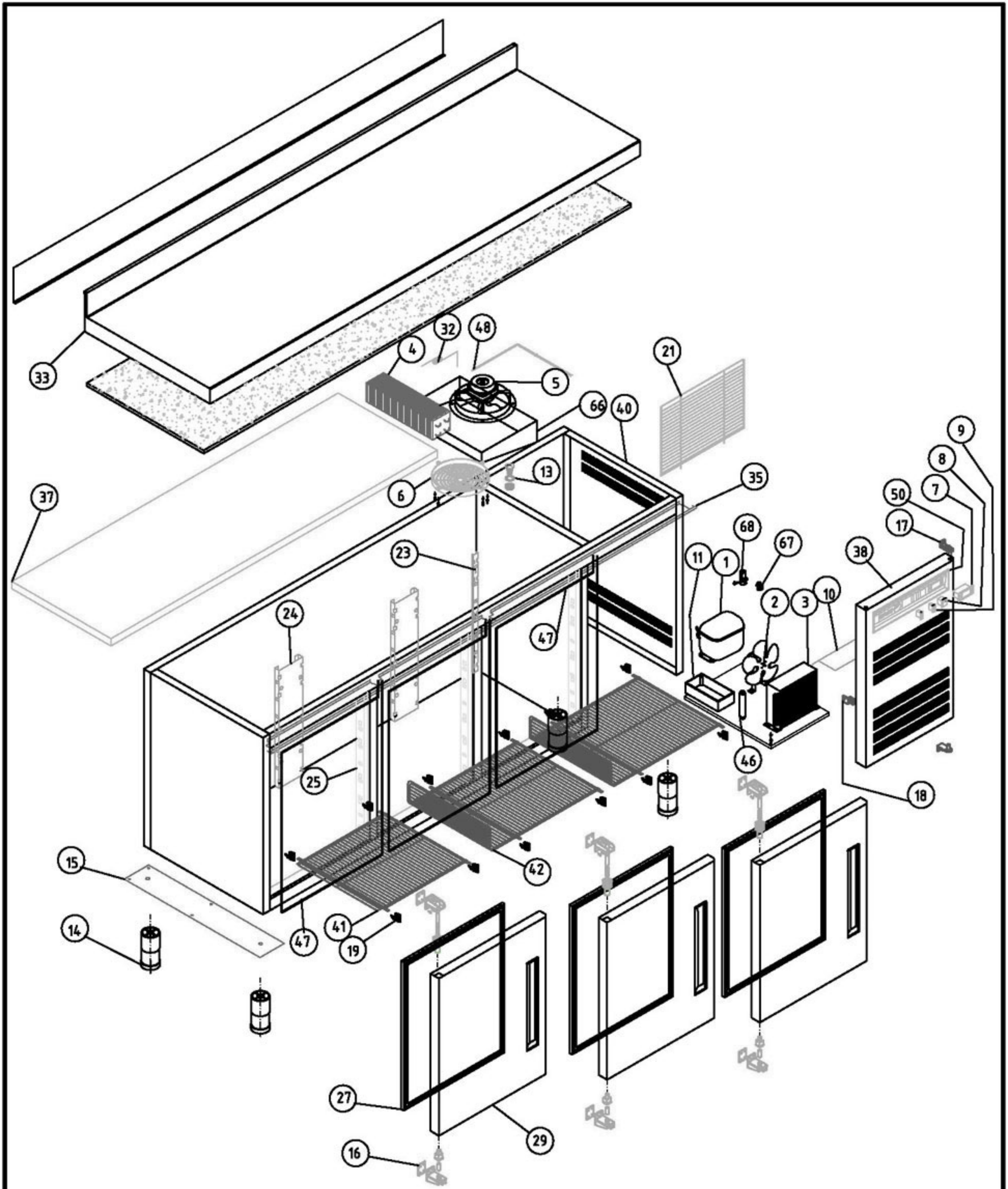


M1 MESAS FRÍAS

COD. PIEZA: **1411111200000**

COTAS SIN TOLERANCIA **DIN 7168-f**

| | GRADO TOLERANCIA | FINO | MEDIO | GRUESO |
|---|---|---|---|---|
| ANGULAR | HASTA 10 mm | ±1° | | ±1° 30' |
| | MAS DE 10 A 50 mm | ±30' | | ±50' |
| | MAS DE 50 A 120 mm | ±20' | | ±25' |
| | MAS DE 120 A 400 mm | ±10' | | ±15' |
| | MAS DE 400 mm | ±5' | | ±10' |

| | GRADO TOLERANCIA | FINO | MEDIO | GRUESO |
|---|---|---|---|---|
| LINEAL | HASTA 3 mm | ±0,05 | ±0,10 | ±0,15 |
| | MAS DE 3 A 6 mm | ±0,05 | ±0,10 | ±0,20 |
| | MAS DE 6 A 30 mm | ±0,10 | ±0,20 | ±0,50 |
| | MAS DE 30 A 120 mm | ±0,15 | ±0,30 | ±0,80 |
| | MAS DE 120 A 400 mm | ±0,20 | ±0,50 | ±1,20 |
| | MAS DE 400 A 1000 mm | ±0,30 | ±0,80 | ±2,00 |
| | MAS DE 1000 A 2000 mm | ±0,50 | ±1,20 | ±3,00 |

Material: **MATERIAL ESPESOR**

Acabado: **ACABADO**

SUSTITUYE A: .

SUSTITUIDO POR: .

COMÚN A

| MODELO | Ud. | MODELO | Ud. | MODELO | Ud. | MODELO | Ud. | MODELO |
|---|---|---|---|---|---|---|---|---|
| MSN-200 | 1 | | | | | | | |
| | | | | | | | | |
| | | | | | | | | |

| A4 | Nombre | Fecha |
|---|---|---|
| Dibujado | MJGG | 3-3-03 |
| Modificado | . | . |

FAGOR
FAGOFRI s.a.

Escala 1:22

# RECAMBIOS MSN

Código máquina: CODIGO

# RECAMBIOS MESAS FRÍAS

revisión 01-03-2003

FAGOR

FAGOFRI S.A.

| Nº | CÓDIGO | DESCRIPCIÓN | MODELOS SNACK | MSN-150 | MSN-200 | MSN-250 | MSN-300 | MSN-117-R | MSN-169-R | MSN-222-R | MSN-274-R |
|---|---|---|---|---|---|---|---|---|---|---|---|
| 1 | 6021010001 | COMPR.SC-12-CL R404A | | 1 | | | | | | | |
| 1 | 6021010002 | COMPR.SC-15-CL R404A | | | 1 | 1 | 1 | | | | |
| 2 | 6021050002 | VENTILADOR 10W PATA PALA 220V | | 1 | 1 | 1 | 1 | | | | |
| 3 | 6029020005 | CONDENSADOR 10x4 TECHO | | 1 | 1 | 1 | 1 | | | | |
| 4 | 6029010037 | BAT.FC61B BAJO6T4R300A6S(PINTA | | 1 | 1 | 1 | 1 | | 1 | 1 | 1 |
| 5 | 6021050001 | VENTIL.EVAPOR.5W ARO/TIRO FORZ | | 1 | 1 | 1 | 1 | 1 | 1 | 1 | 1 |
| 6 | 6003010035 | REJILLA PROTECCION VENTILADOR | | 1 | 1 | 1 | 1 | 1 | 1 | 1 | 1 |
| 7 | 6021350019 | TERMOS.CONGELAC.ID 974 F 220V | | 1 | 1 | 1 | 1 | 1 | 1 | 1 | 1 |
| 7 | 6021350015 | TERMOSTATO TERM.REFRIG ID 961F | | | | | | 1 | | 1 | 1 |
| 8 | 6021130001 | INTERRUPTOR BIPOL.AMB.ON/OFF | | 1 | 1 | 1 | 1 | 1 | 1 | 1 | 1 |
| 9 | 6021130010 | PILOTO RECTAN.AMBAR SEÑAL LUM. | | 1 | 1 | 1 | 1 | 1 | 1 | 1 | 1 |
| 10 | M109050157 | CHAPA PROT.MANDOS MESAS FRIAS | | 1 | 1 | 1 | 1 | | | | |
| 11 | 6003010023 | BANDEJA EVAPORACION AUTOMÁTICA | | 1 | 1 | 1 | 1 | | | | |
| 13 | 6003010034 | DESAGÜE SAN MIGUEL | | 1 | 1 | 1 | 1 | 1 | 1 | 1 | 1 |
| 14 | 6007050015 | PATA REGUL. 50X95 BAJOS | | 4 | 4 | 4 | 4 | 4 | 4 | 4 | 4 |
| 15 | M161250004 | BASE PATAS MSP,FMP,MMC PINTADO | | 1 | 1 | 1 | 1 | 1 | 1 | 1 | 1 |
| 16 | V169090001 | BISAGRA SISTEMA GIRO A IZDA | | 2 | 3 | 4 | 5 | 2 | 3 | 4 | 5 |
| 17 | 6003010048 | SOPORTE PUERTA REJILLA | | 2 | 2 | 2 | 2 | | | | |
| 18 | 6003010032 | ESCUADRA AMARRE REJILLA | | 1 | 1 | 1 | 1 | | | | |
| 19 | 6003010020 | SOPORTE PARRILLA | | 8 | 12 | 16 | 20 | 8 | 12 | 16 | 20 |
| 21 | 6003010181 | REJ.RESP.GRUPO 387X280POLICARB | | 1 | 1 | 1 | 1 | | | | |
| 23 | M109050080 | CREMALL. LAT. POST. MSP | | 2 | 2 | 2 | 2 | 2 | 2 | 2 | 2 |
| 24 | M109050081 | CREMALLERA CENTRAL MSP | | 1 | 2 | 3 | 4 | 1 | 1 | 1 | 1 |
| 25 | M109050153 | CREMALLERA MFP-MSP 576X66 MM | | 4 | 6 | 8 | 10 | 4 | 6 | 8 | 10 |
| 27 | 6045010009 | BURLETE 475X605 MSP | | 2 | 3 | 4 | 5 | 2 | 3 | 4 | 5 |
| 29 | M169010011 | PUERTA MSN/MPN IZDA TIR.ABS | | 2 | 3 | 4 | 5 | 2 | 3 | 4 | 5 |
| 32 | M107020003 | CAPILAR 1.25x2900 | | 1 | 1 | 1 | 1 | | | | |
| 33 | M181010008 | ENCIMERA MSP/FMP274 | | | | | | | | | 1 |
| 33 | M181010007 | ENCIMERA MSP/FMP222 | | | | | | | | 1 | |
| 33 | M181010005 | ENCIMERA MSP/FMP117 | | | | | | 1 | | | |
| 33 | M181010004 | ENCIMERA MSP/FMP300 | | | | | 1 | | | | |
| 33 | M181010003 | ENCIMERA MSP/FMP250 | | | | 1 | | | | | |
| 33 | M181010001 | ENCIMERA MSP/FMP150 | | 1 | | | | | | | |
| 33 | M181010002 | ENCIMERA MSP/FMP200 | | | 1 | | | | | | |
| 33 | M181010006 | ENCIMERA MSP/FMP169 | | | | | | | 1 | | |
| 35 | M109250026 | PROTECT. ENCIM. 150 | | 1 | | | | 1 | 1 | 1 | 1 |
| 35 | M109250027 | PROTECT. ENCIM. 200 | | | 1 | | | | | | |
| 35 | M109250028 | PROTECT. ENCIM. 250 | | | | 1 | 1 | | | | |
| 35 | M109250030 | PROTECT. ENCIM. SUPLE. 300 | | | | | 1 | | | | |
| 36 | 6001050034 | AGLOM.3060X550X13 ENC. MSP-300 | | | | | 1 | | | | |
| 36 | 6001050033 | AGLOM.2540X550X13 ENC. MSP-250 | | | | 1 | | | | | |
| 36 | 6001050021 | AGLOM.1490X550X13 ENC. MSP-150 | | 1 | 1 | | | 1 | 1 | 1 | 1 |
| 37 | 6013050003 | PL.POLIEST.1535X466X30 TIPO IV | | 1 | 1 | 1 | 1 | 1 | 1 | 1 | 1 |
| 38 | M109010343 | REJILLA CUADRO ABS GRIS MSN | | 1 | 1 | 1 | 1 | | | | |
| 38 | M109010335 | CUADRO DE MANDOS MSN-R R7 | | | | | | 1 | 1 | 1 | 1 |
| 40 | M109010134 | COST EXT LAD GRUP MSP | | 1 | 1 | 1 | 1 | | | | |
| 40 | M109010237 | COST.EXT.LAD.GRUP.REMOTO MSP | | | | | | 1 | 1 | 1 | 1 |
| 41 | 6027010002 | PARRILLA PLANA 433x442 | | 1 | 1 | 1 | 1 | 1 | 1 | 1 | 1 |
| 42 | 6027010001 | PARRILLA MSP C/P 513x442 | | 1 | 2 | 3 | 4 | 1 | 2 | 3 | 4 |
| 45 | 6033110002 | JGO.SOPORTE ENSALADERA MEP-135/180 | | | | | | | 1 | 1 | 1 |
| 46 | 6047010003 | FILTRO DESHIDRAT.40GR 1/4X1/4 | | 1 | 1 | 1 | 1 | | | | |
| 47 | 6021250002 | RESIST.MARCO SNACK-2, 21W | | 1 | 2 | 3 | 4 | 1 | 2 | 3 | 4 |
| 47 | 6021250001 | RESIST.MARCO SNACK-1, 21W | | 1 | 1 | 1 | 1 | 1 | 1 | 1 | 1 |
| 48 | 6021350013 | SONDA TERMOST.REF NTC 15KOhm | | 1 | 1 | 1 | 1 | 1 | 1 | 1 | 1 |
| 50 | 6003010105 | CUADRO ABS GRIS | | 1 | 1 | 1 | 1 | | | | |
| 55 | 6037050003 | SOPORTE COST.RODAP.MSP 230X500 | | | | | | 1 | 1 | 1 | 1 |
| 66 | 6003050002 | GAVETA TIRO FORZADO SNACK | | 1 | 1 | 1 | 1 | 1 | 1 | 1 | 1 |
| 67 | 6021010043 | RELE ARRANQUE COMPRESOR SC-15 CL 6019 | | | 1 | 1 | 1 | | | | |
| 67 | 6021010042 | RELE ARRANQUE COMPRESOR SC-12 CL 6005 | | 1 | | | | | | | |
| 68 | 6021010035 | CONDENS.ARRANQUE SC 117U5017 | | 1 | 1 | 1 | 1 | | | | |