CELULAS /BLAST CHILLER CELLS
21-07-14 V0.0

MODEL

Nº	CODE CÓDIGO	RECOM.	DESCRIPTION	DESCRIPCIÓN	CMP-201
1	12069110		FRONT ROOF CM-201	FRONTAL TECHO CM-201	1
2	12069107		BACK ROOF CM-201	RESPALDO TECHO CELULAS CM-201	1
3	12069112		SIDE ROOF CM-201	LATERAL TECHO CM-201	2
4	12093292		DEFLECTOR LEFT BLAST CHILLER	DEFLECTOR IZDO CELULA	2
5	12068090		BOLT FIXING COVER 051	PERNO FIJ.REJILLA 051	8
6	12069406		SUPPORT HEART PROBE	SOPORTE SONDA PINCHO	1
7	12093299		DEFLECTOR RIGHT BLAST CHILLER	DEFLECTOR DCHO CELULA	2
8	12083961		CONTROL PANEL BLAST CHILLER	C.MANDOS CELULAS	1
9	12069475		LEFT SUPPORT CONTROL PANEL	SOPORTE IZDO CUADRO DE MANDOS	1
10	12069476		RIGHT SUPPORT CONTROL PANEL	SOPORTE DCHO CUADRO DE MANDOS	1
11	12103256		EVAP.56T5R440A4.5S CMP-201	BAT.56T5R440A4.5S CMP-201	1
12	12069756		COVER LEFT ELBOW CMP-201	CUBRECODOS IZDO CMP-201	1
13	12069704		COVER RIGHT ELBOW CM-201	CUBRECODOS DCHO CM-201	1
14	12069755		FAN SUPPORT CMP-201	SOPORTE VENTILADOR CMP-201	1
15	12069706		EVAPORATOR SUPPORT CM-201	SOPORTE EVAPORADOR CM-201	6
16	12069711		COVER BOX EVAPORATOR CM-201	TAPA CAJA EVAPORADOR CM-201	1
17	12069712		DRAIN TRAY EVAP.CM-201	BANDEJA DESAGUE EVAP.CM-201	1
18	12067630		VALVE TES5 ROSC 1/2-5/8 BLAST CHILLER	VALVULA TES5 ROSC 1/2-5/8 CELU	1
19	12067631		HOLE TES5 Nº1 BLAST CHILLER	ORIFICIO TES5 Nº1 CELULAS	1
20	12037488		PRENSAESTOPAS PG11E GRIS	PRENSAESTOPAS PLAST.CON TUERCA PG-11	1
21	12067536		FAN D=400 HRB/4-400+REJILLA	VENTILADOR D=400 HRB/4-400+REJILLA	3
22	12069700		FAN BAFLE D=400	BAFLE VENTILADOR D=400 C/PESTAÑ.	3
23	12068285		STEEL HINGE 40X40X1	BISAGRA INOX 40X40X1(4TALADRO)	5
24	12037489		DRAIN 3/4	DESAG COMPL 3/4 GRIS+TUERCA	1
25	12068106		NUT THREAD SAE 5/8"	"TUERCA CON ROSCA SAE 5/8"""	1
26	12068101		NUT SAE 1/2	TUERCA SAE 1/2	1
27	12068102		NUT SAE 1/4	TUERCA SAE 1/4	1
28	12066767		ELBOW H CUH-01	CODO H CUH-01 TUB.MET22-28/40	1
29	12093617		ELEMENT THERMOSTAT VALVE TES5	ELEM.TER.VALV.TES5	1
30	12068656		FRONT BUMPER BLAST CHILLER	PARAGOLPES FRONTAL CELULA	2
31	12068313		BUMPER FIXING BLAST CHILLER	CASQUIL FIJ.PARAGOLPES CELULAS	4
32	12067634		INTERCAMBIADOR HE 4.0	INTERCAMBIADOR HE 4.0	1
33	12027512		SOLENOID VALVE 1/2	VALVUL.SOLE.1/2 ODS 220V 50/60	1
34	12069980		SOLENOID VALVE SUPPORT	SOPORTE VALV.SOLENOIDE	1
35	12069722		EVAPORATOR DECORATIVE TUBES CM-201	DECORATIVO TUBOS EVAPOR CM-201	1
36	12067545		FUSE 1A 5x20	FUSIBLE 1A 5x20 ATM-102	1
37	12067547		FUSE HOLDER 5x20	PORTAFUSIB.PANEL5x20 R03.500-1	1
38	12067790		ELECTRICAL INSTALLATION CHAMBER CM-201	INSTAL.ELECTR.CAMARA CM-201	1
39	12067791		ELECTRICAL INSTALLATION MANG. CM-201	INSTALACION MANGUERA CM-201	1
40	12069907		TOP ELECTRICAL ELEMENTS	TAPA ELEMENTOS ELECT.	1
41	12069995		ELECTRICAL INSTALLATION BOX BLAST CHILLER	CAJA INSTALACION ELEC. CELULAS	1
42	12115938		PROGRAM PCO SPARE BLAST CHILLER	PCO PROGRAMADA CELULAS RECAMB.	1
43	12040126		CONNECTOR BOARD PCOXS	CONECT TOR.TAR.PCOXS	1
44	12027150		DISPLAY 132X64 PGD1	DISPLAY 132X64 PGD1	1
45	12027982		HEAT HEART PROBE ATM	SONDA NTC CALEFACTADA ATM	1
46	12045530		SONDA NTC 2,5 MTS (NTC025HP00)	SONDA NTC 2,5 MTS (NTC025HP00)	2
47	12031414		TRANSFORMER.25VA PCOxs	TRANSFOR.25VA PCOxs ATM-031	1
48	12040070		BOTON AD.FAGOR 670x160	BOTON AD.FAGOR 670x160	1
49	12040085		CABLE CONNECTION .pCOxs-DYSPLAY	CABLE CONEX.pCOxs-DYSPLAY	1
50	12067541		BUZZER	ZUMBADOR C.CABLE 511-7636	1
51	12067692		PRENSAESTOPAS PG16E GRIS	PRENSAESTOPAS PG16E GRIS	3
52	12067759		PRENSAESTO AG32-GR M32	PRENSAESTO AG32-GR M32	3
53	12067554		BREAKER SWITCH 25A	INTERRUPTOR CORTE 25A III VO	1
54	12067587		RAIL TERMINAL UT2.5	BORNE CARRIL DE PASO UT2.5	27
55	12067588		RAIL TERMINAL UT6PE	BORNE CARRIL PASO TIERRA UT6PE	1
56	12034668		RELAY RPW508730 220V 2CT	CONT.WEIDM. RPW508730 220V 2CT	1
57	12069992		RAIL TERMINAL SUPPORT	SOPORTE BORNES CARRIL ELEC.CM	1
58	12069993		BREAKER SWITCH SUPPORT	SOPORTE INT.DE CORTE CM	1
59	12067563		HANDLE KCF1PZ PARA IN.CORTE VO	MANETA KCF1PZ PARA IN.CORTE VO	1
60	12092161		RAIL TERMINAL PHOUT 2.5 BU BLUE	BORNE CARRIL PHOUT 2.5 BU AZUL	7
61	12069746		BUMPER SIDE FIXING CM-201	FIJAC.LATERAL PARAGOLP.CM-201	2
62	12066787		BUMPER SIDE CM-201	PARAGOLPES LATERAL CM-201	2
63	12066786		BUMPER BACK BLAST CHILLER	PARAGOLPES TRASERO 201	2
64	12024066		TIE BREAKER MAGNETIC	AMARRE INTERRUPTOR MAGNETICO	1
65	12024477		MAGNETIC SWICHT	INTERRUPTOR MAGNETICO	1
66	12069113		MAGNETIC COVER	CUBRE-IMAN MICRO-PUERTA CELULA	1
67	12024384		MAGNETIC	IMAN	1
68	CONJ03		COMPLETE HANDLE BLAST CHILLER	TIRADOR COMPLETO PUERTA CELULA	1
69	RE185080C		DOOR RESISTANCE BLAST CHILLER	RESISTENCIA MARCO PUERTA CELULA	1
70	B1185080		TRIANGULAR GASKET BLAST CHILLER	BURLETE TRIANGULAR PUERTA CELULA	1
71	B2185080		GASKET DOOR LOW BLAST CHILLER	BURLETE BAJO PUERTA CELULA	1
72	V		PRESSURE BALANCING VALVE	VALVULA EQUILIBRADORA DE PRESIONES CELULA	1
73	BISA14		HINGE CHILL BLAST CHILLER	BISAGRA PUERTA CELULA	2

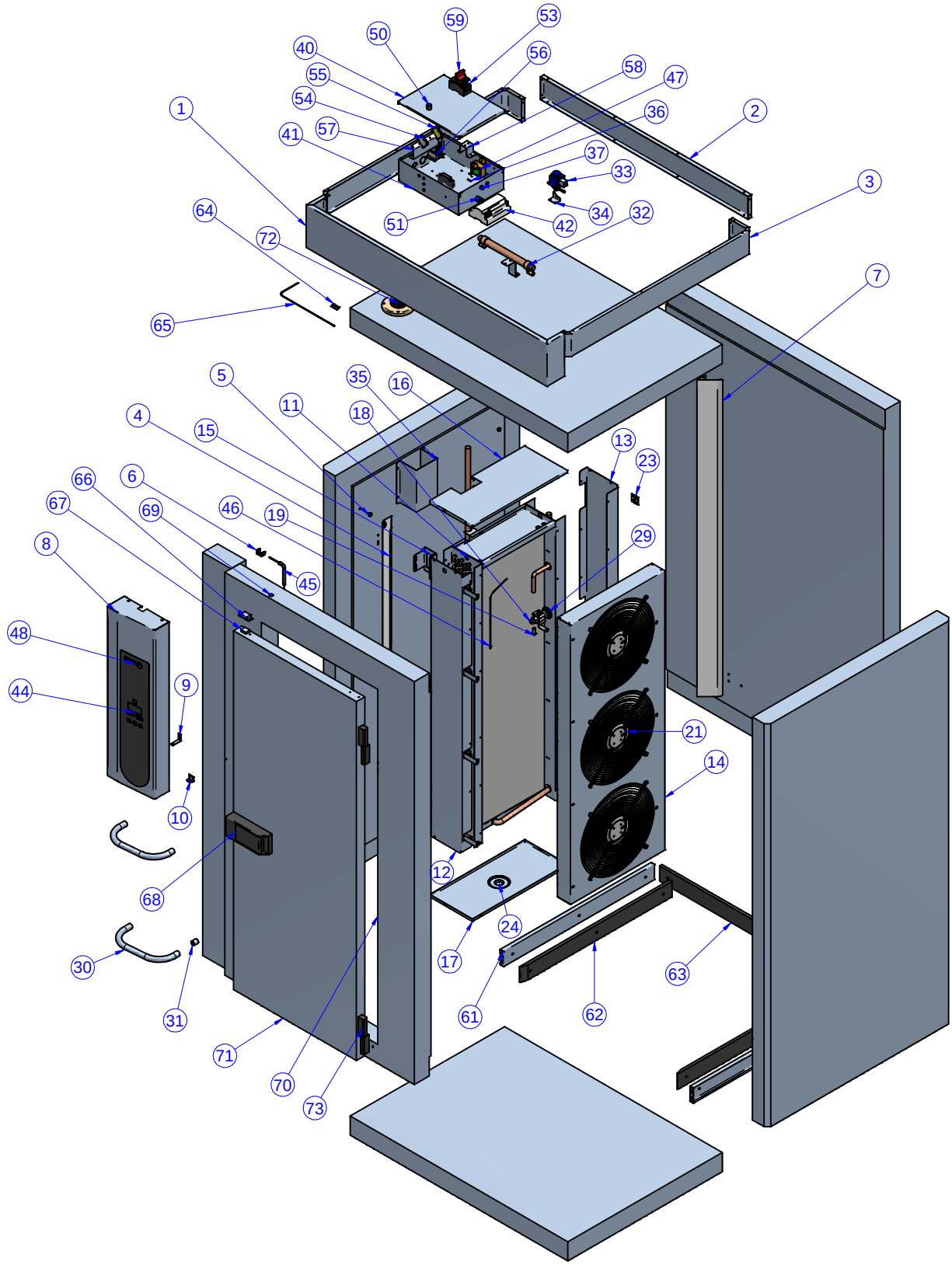

CNC:

-	SPARE PARTS CMP-201	-		-	
Nº	TITLE	QTY	CODE	MATERIAL	TREATMENT

GENERAL TOLERANCES: ISO 2768-1 Very Coarse

LINEAR

	Fine	Medium	Coarse	Very Coarse
<3mm	±0.05	±0.10	±0.15	
3-6mm	±0.05	±0.10	±0.20	
6-30mm	±0.10	±0.20	±0.50	
30-120mm	±0.15	±0.30	±0.80	
120-400mm	±0.20	±0.50	±1.20	
400-1000mm	±0.30	±0.80	±2.00	
1000-2000mm	±0.50	±1.20	±3.00	

ANGULAR

	Fine	Medium	Coarse	Very Coarse
<10mm	±1º		±1º30'	±3º
10-50mm	±30'		±1º	±2º
50-120mm	±20'		±30'	±1º
120-400mm	±10'		±15'	±30'
>400mm	±5'		±10'	±20'

GENERAL TOLERANCE FOR FORM AND POSITION: ISO 2768-2

DESIGNED BY	VALIDATED BY	DATE
J.A.PULIDO		21-02-2014

SHEET FORMAT:	A4
DESING CENTER:	LCN
MAT STATUS:	
DOC STATUS:	
SHEET:	1 / 1
SCALE:	1:25

VERSION		REVISION	

PROPOSED BY:		ISSUE DATE:	