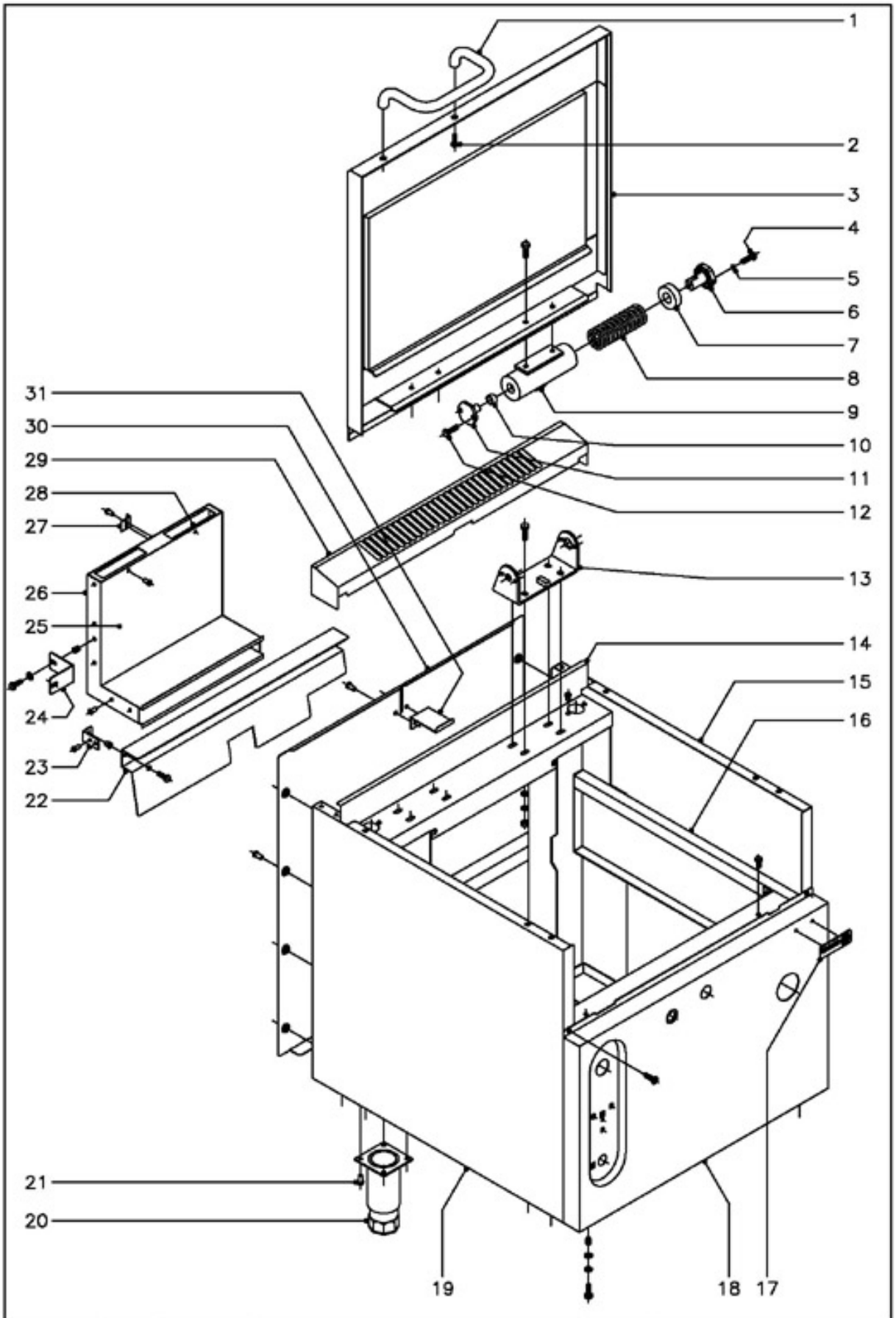

1	S036123
2	X152809
3	X262817
4	Q012042
5	Q262040
6	S116120
7	S116118
8	S116121
9	X156101
	Q012051
10	S116126
11	S116119
12	Q012041
13	X286102
	Q012053
	Q232050
	Q262050
	Q162050
14	X262657
	Q419005
15	X262813
	Q012042
	Q262040
	Q302022
16	X270110
17	U262806
	Q221023
18	X262814
18	X272801

	Q221343
	Q012042
	Q262040
	Q302022
	Q152004
19	X262812
	Q221343
	Q012042
	Q262040
	Q302022
20	X260151
21	Q411304
22	X262656
	Q012031
	Q232030
	Q221342
23	X152679
	Q419005
24	X262658
	Q012031
	Q302022
	Q221342
25	X262655
26	X262654
27	R202607
28	X262661
	Q419005
29	U745425
30	U742804
	Q419005
31	R955405
	Q419005

N plano	Firma	Fecha	Aparato	Lamina	
C-1204		6-2002	MUEBLE SARTEN BASCULANTE SBG-710 Y SBE-710	1	Fagor Industrial S.Coop. Oñate

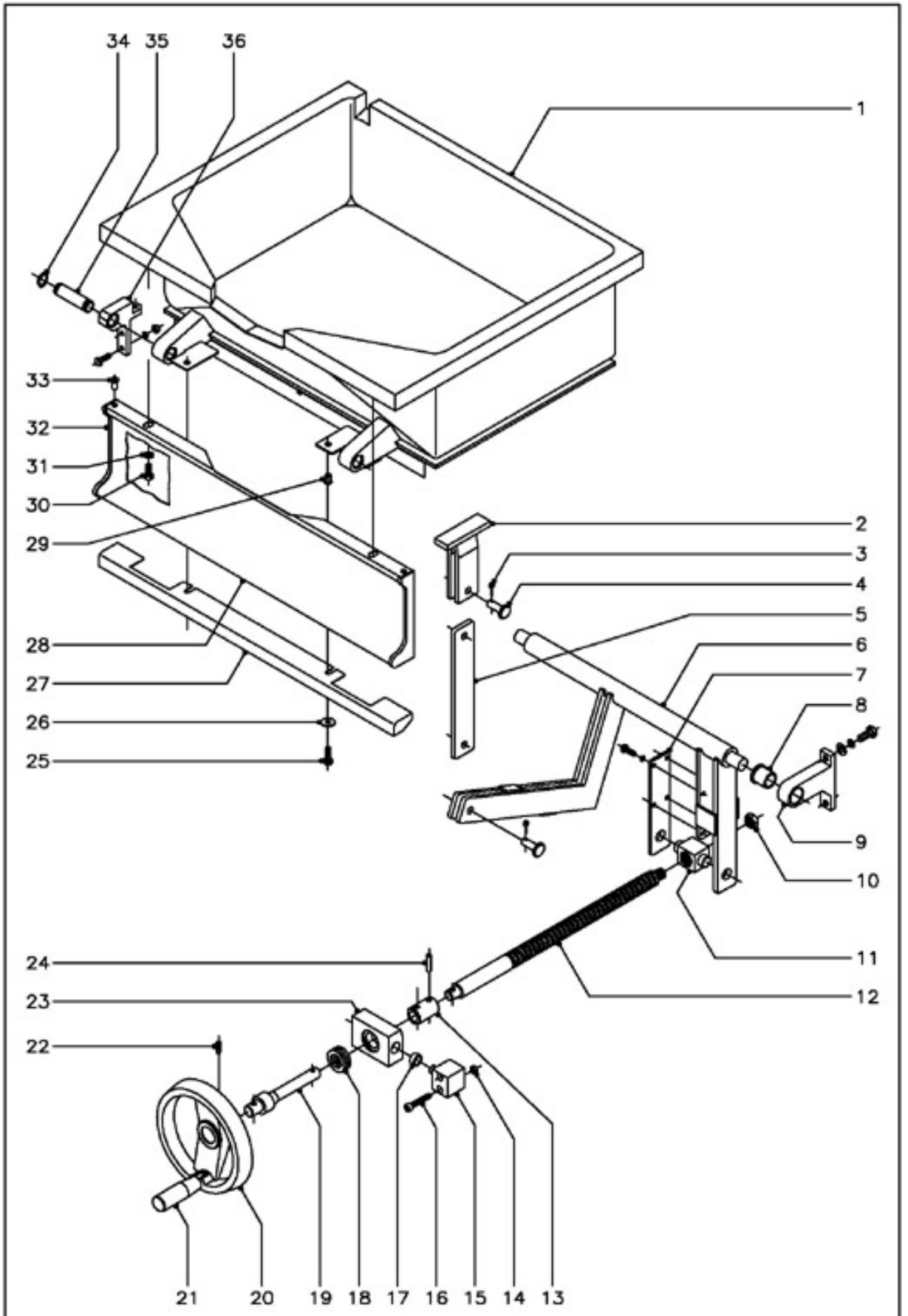

1	X266110
1	X276102
2	-
3	Q352024
4	X156123
5	X266116
6	X266112
7	X156149
	Q012042
	Q262040
8	X109550
9	X150108
	Q232060
	Q261060
	Q012063
10	Q222015
11	X156154
12	X266111
13	X156115
14	Q162040
15	X156113
16	Q052046
17	S116126
18	X156125
19	X156153
20	X156139
21	X156135
22	Q131552
23	X156114
24	Q371027
25	Q012032
26	Q301304
27	X272617
28	X262811
29	Q221342
30	Q012042
31	Q302022
	Q221343
32	U452805
s/n	U452804
33	Q419005
34	Q301020
35	X109511
36	X156145
	Q012043
	Q262040
	Q162040

N plano	Firma	Fecha	Aparato	CUBA	Lamina	Fagor Industrial S.Coop. FAGOR
C-1205		6-2002	SARTEN BASCULANTE SBC-710 Y SBE-710		2	Onate

1	Q306024
2	Q221302
3	S115013
4	S112151
5	Q012042
6	Q221343
7	X265014
8	X265004
9	Q306024
10	X156140
11	Q232030
12	Q152004

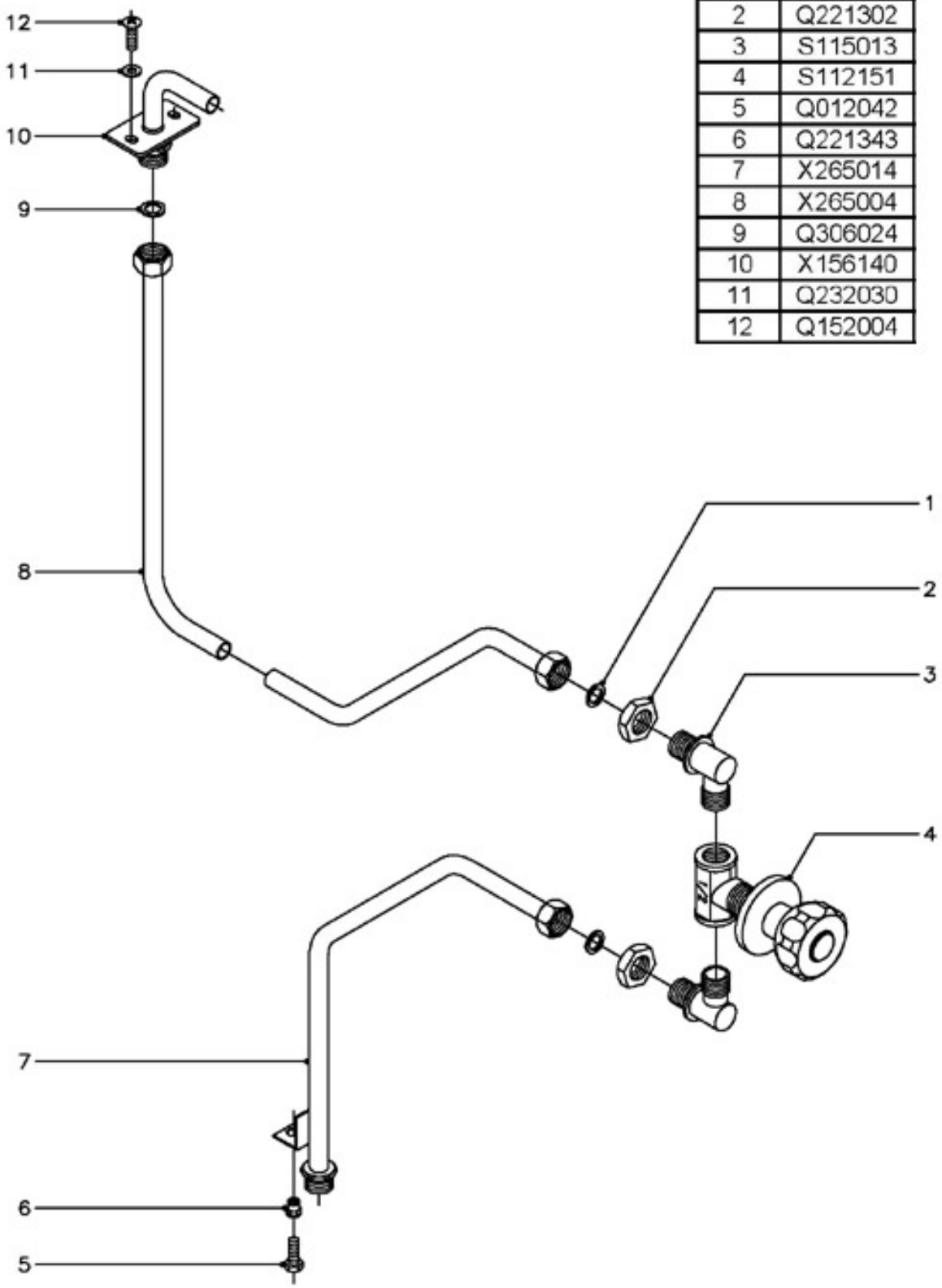

Nº plano	Firma	Fecha	Aparato		Lamina	
C-1206		6-2002	TOMA DE AGUA SARTEN BASCULANTE SBG-710 Y SBE-710		3	Fagor Industrial S.Coop. Oñate

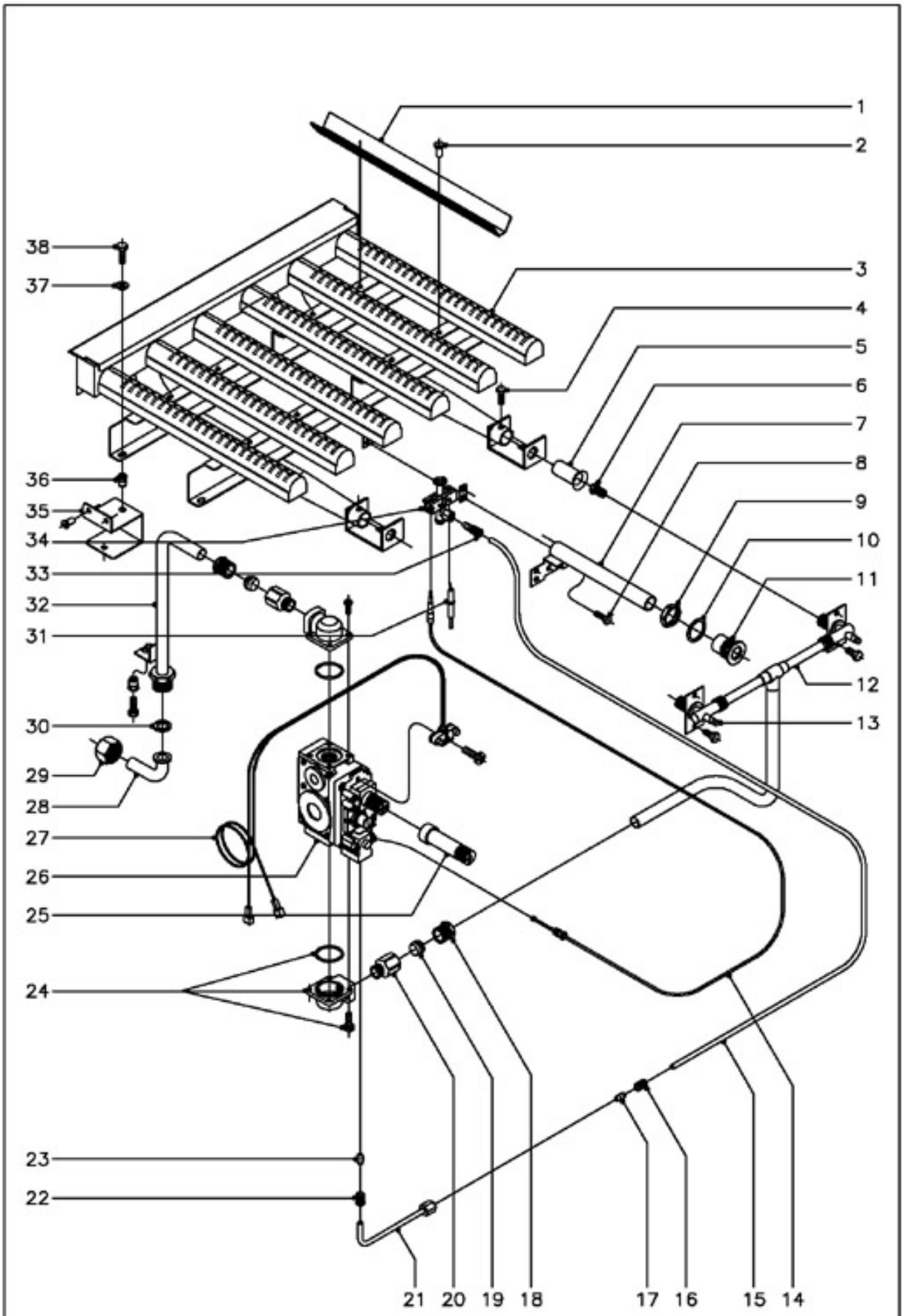

1	X265709
2	Q419005
3	X265711
4	Q012031
5	U325707
6	U052402
6	9429500
6	X102403
7	X155035
8	Q012031
9	Q221324
10	Q306027
11	S112804
12	X265010
	Q012031
13	Q153002
14	U562130
15	X265016
16	U195009
17	X205028
18	X012104
19	X012105
20	X162101
21	X155043
22	U195009
23	X205028
24	X153004
25	X262100
26	X163000
	X163020
27	R275027
28	U565007
29	U725006
30	Q306052
31	X012101
32	X265012
	Q012042
	Q221343
33	U134323
34	U322118
	U442138
	U442137
35	X262659
	Q419005
36	Q221342
37	Q302022
38	Q012031

N plano	Firma	Fecha	Aparato		Lamina	
C-1207		6-2002	PARTE FUNCIONAL GAS SARTEN BASCULANTE SBG-710		4	Fagor Industrial S.Coop. Oñate

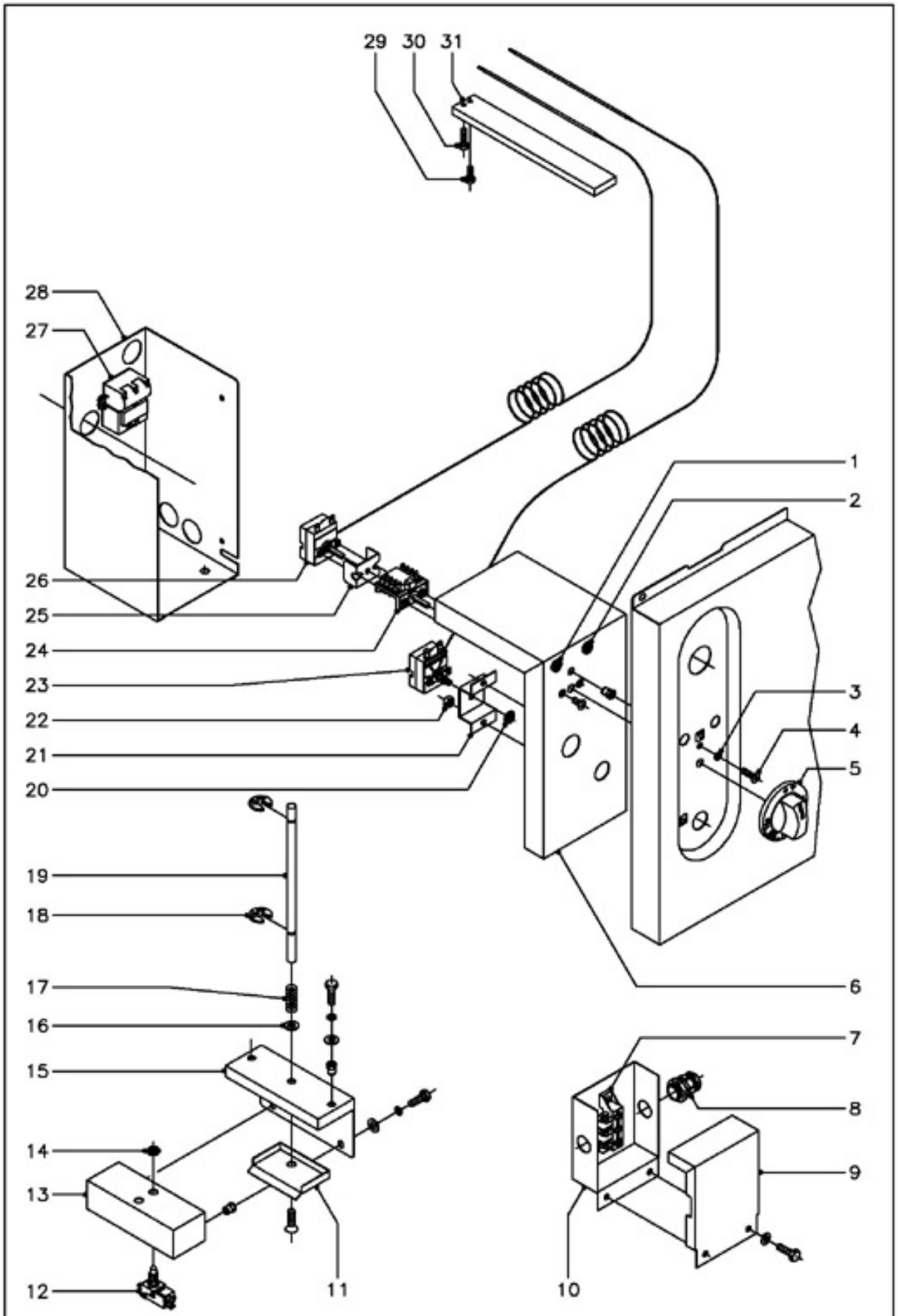

1	X143017
2	X143018
3	Q262030
4	Q152004
	Q221342
5	X152111
	Q281000
6	X152667
7	U183046
8	R073004
9	X342600
	Q302022
	Q012042
10	X342601
11	X152646
	Q152024
12	X343015
13	X152681
	Q221342
	Q302022
	Q262030
	Q012031
14	Q222005
15	X152680
	Q221342
	Q302022
	Q262030
	Q012031
16	Q232050
17	Z700603
18	Q271033
19	X152682
20	Q223022
21	X152661
22	Q162030
23	R612103
24	X163007
	Q151320
25	X313001
26	X153000
27	R073007
28	X152656
29	Q012032
30	Q012033
31	-

N plano	Firma	Fecha	Aparato	Lamina	
C-1208		6-2002	PARTE FUNCIONAL ELECTRICA SARTEN BASCULANTE SBG-710	5	Fagor Industrial S.Coop. FAGOR Onate