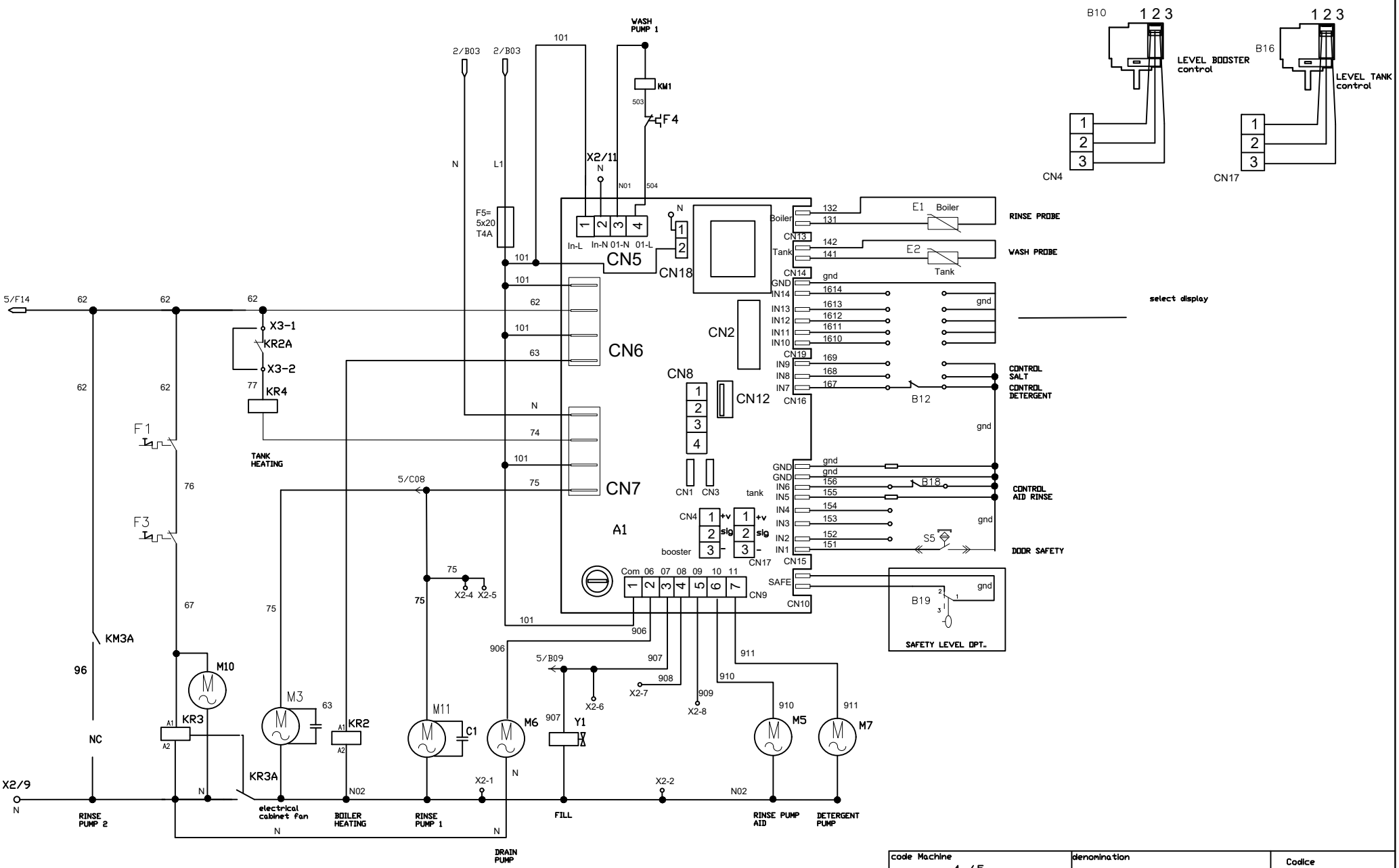

DESCRIZIONE	SOSTITUISCE	DATA
-1 agglunta ventola M10		
-2		

code Machine .4 /.5		denomination WIRING DIAGRAMM	Codice 82194
re-examined	data/date 05/04/18		
inspected by	date	Dishwashers	n°/file 82196 mod --
validated by	date/date	total blat 6 / N° blat 1 / Next blat -2	

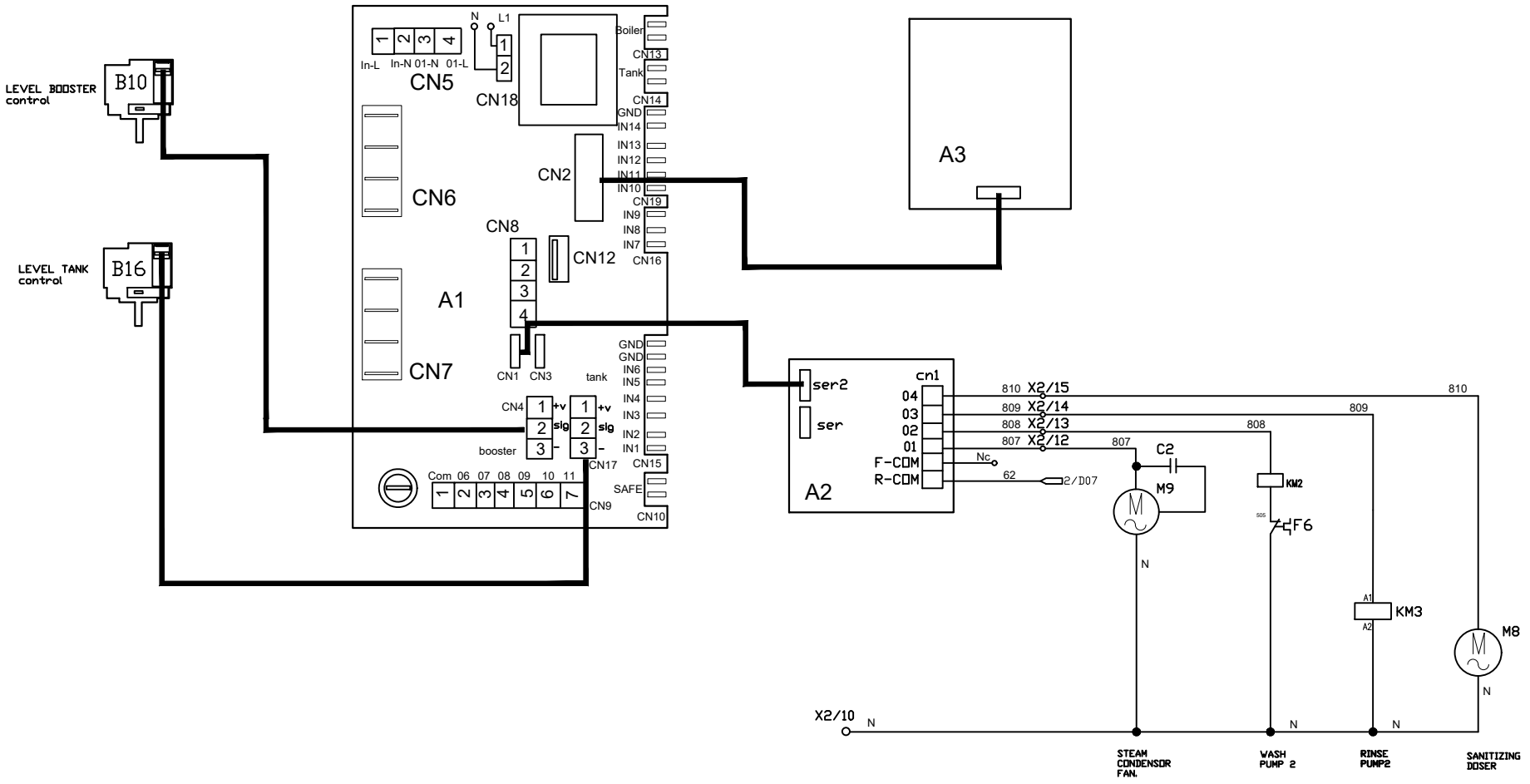

OPTIONAL

	DESCRIZIONE	SOSTITUISCE	DATA
-3			
-2			

code Machine		denomination	Codice
re-examined	data/date 05/04/18	WIRING DIAGRAMM	82194
inspected by	date	Dishwashers	n°/file mod
validated by	date/date	total blat 6 / N° blat 2 / Next blat -3	82196 --

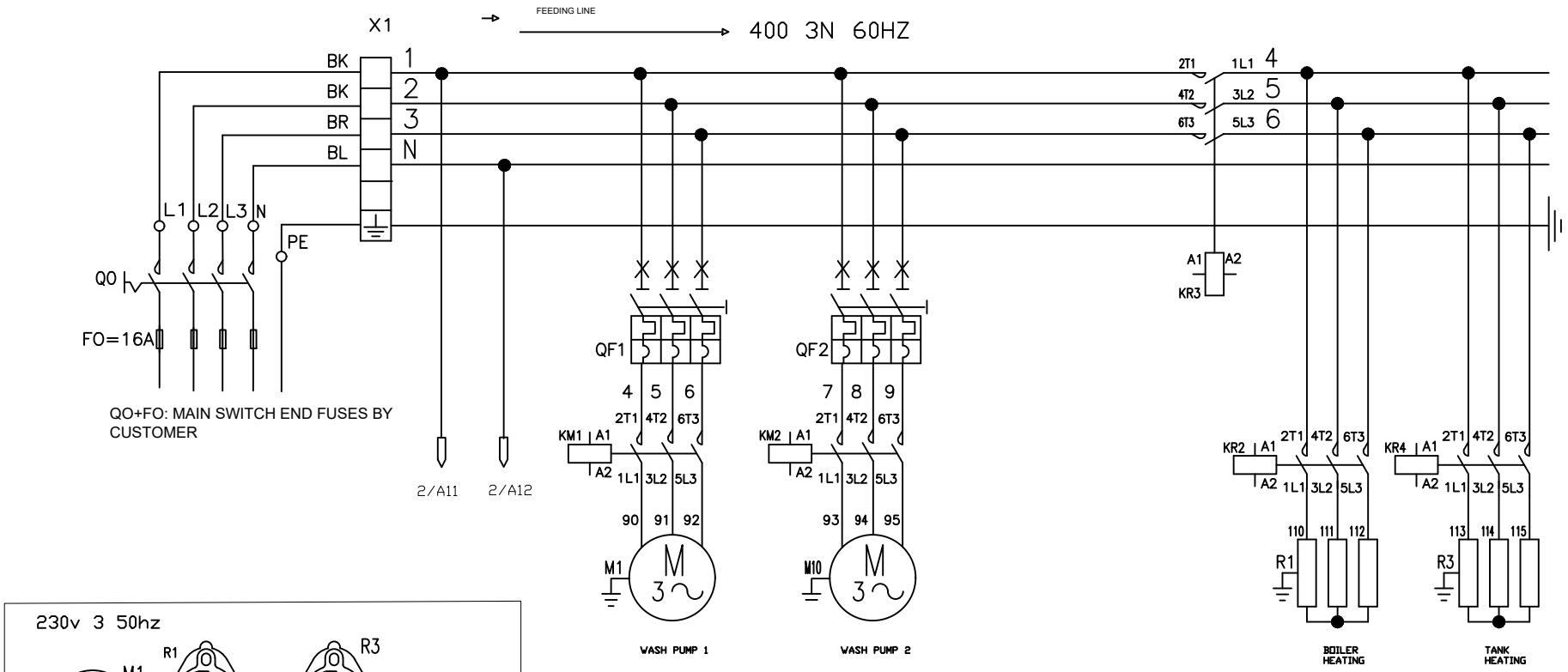

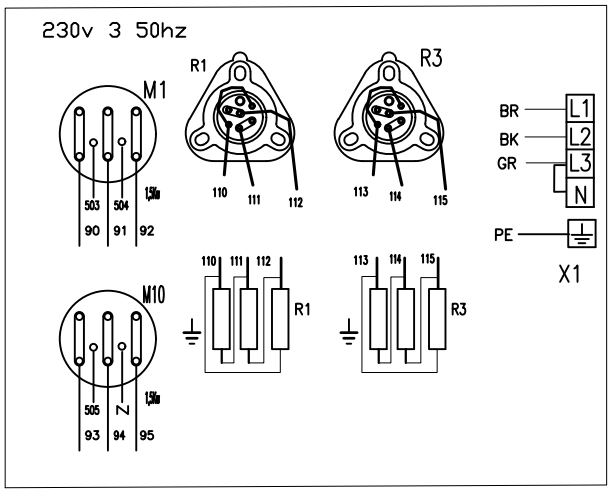

OPTIONAL

	DESCRIZIONE	SOSTITUISCE	DATA
-3			
-2			

code Machine		denomination	Codice
re-examined	data/date 05/04/18	WIRING DIAGRAMM	82194
inspected by	date	Dishwashers	n°/file 82196 mod --
validated by	date/date	total blat 6 / N° blat 3 / Next blat -4	

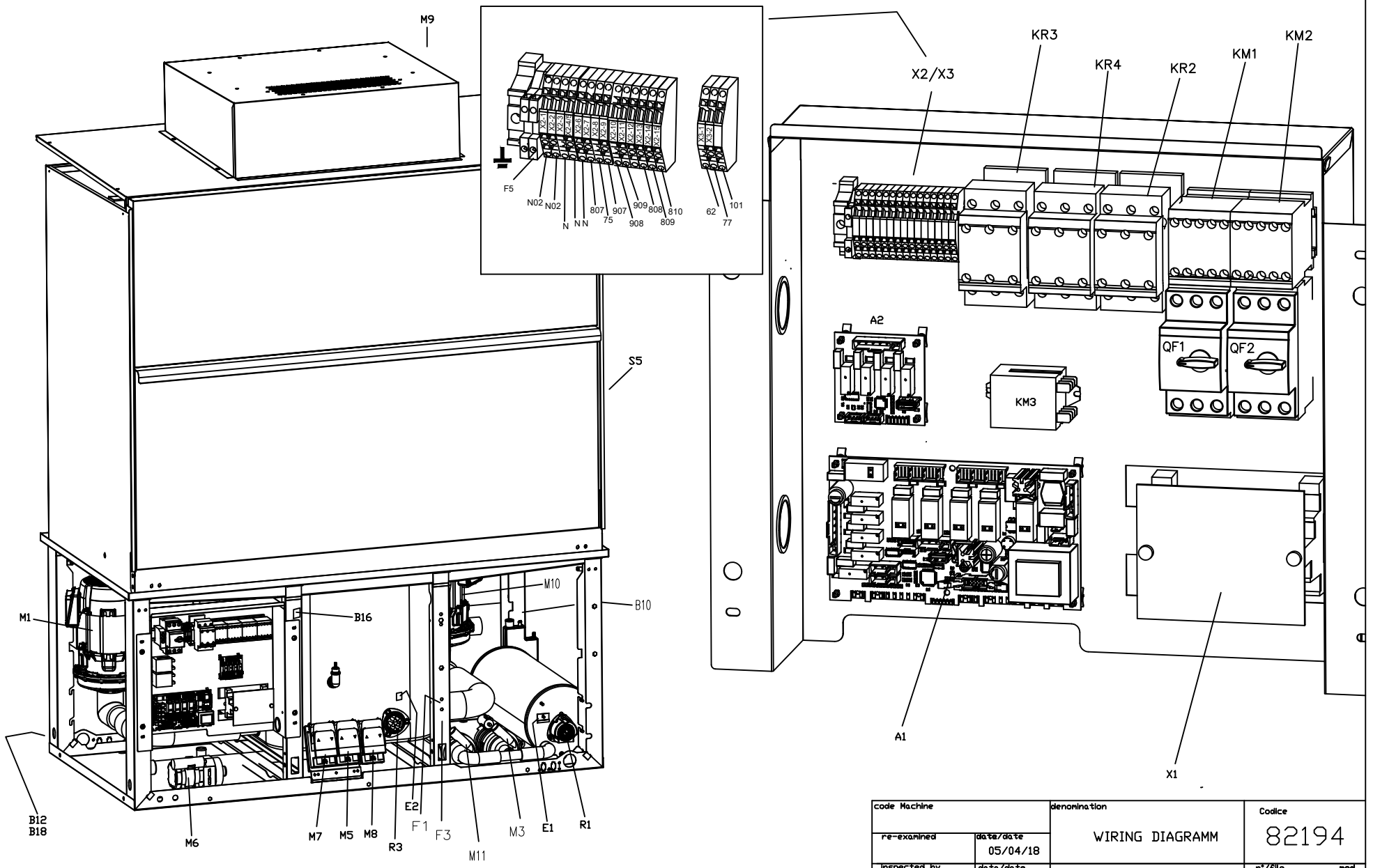

code Machine		denonination	Codice
re-examined	date/date 05/04/18	WIRING DIAGRAMM	82194
inspected by	data/date	Dishwashers	n°/file mod
validated by	data/date	total blat 6 / N° blat 4 / Next blat -5	82196 --

DESCRIZIONE	SOSTITUISCE	DATA

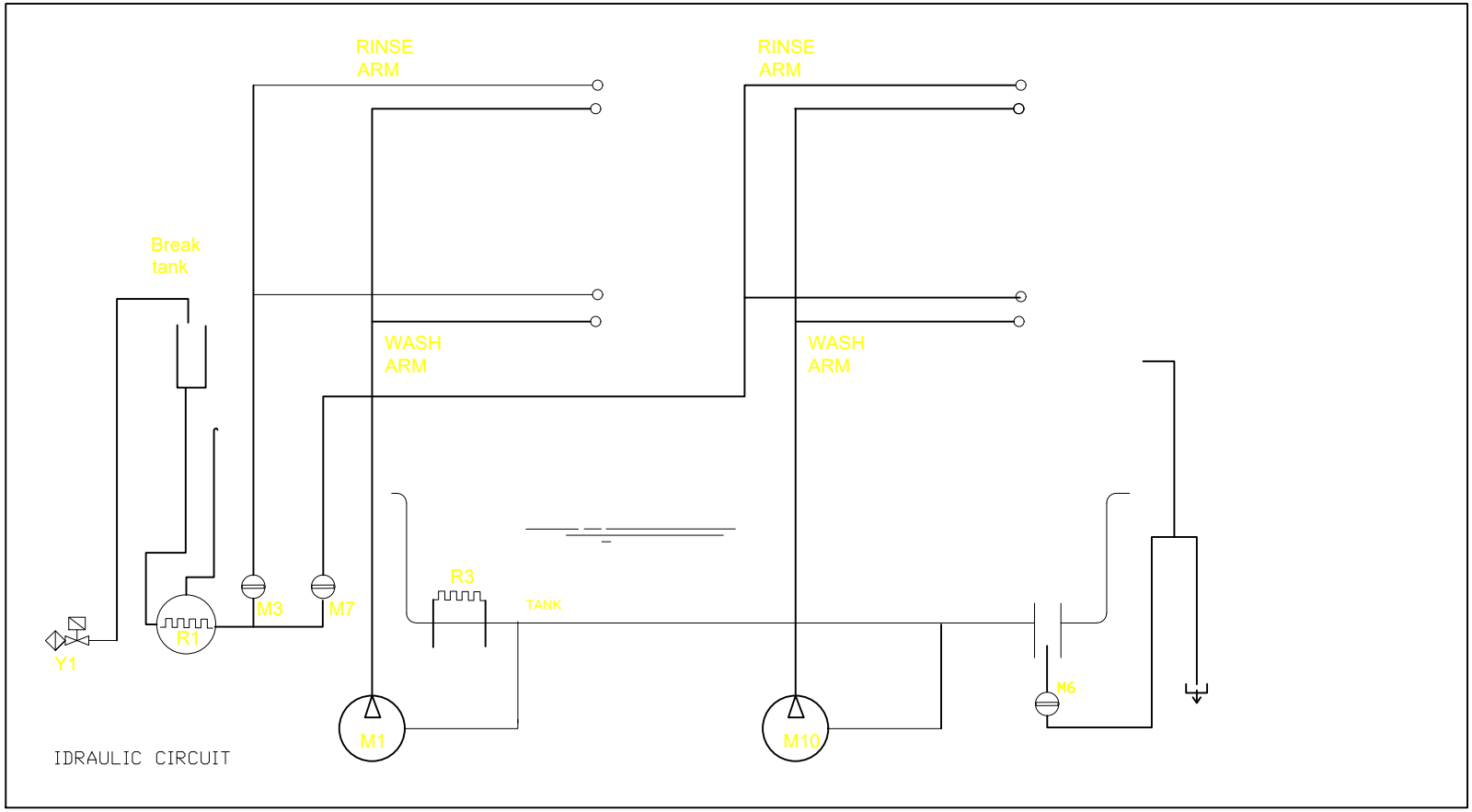

DESCRIZIONE	SOSTITUISCE	DATA

code Machine		denomination		Codice	
re-examined	date/date 05/04/18	WIRING DIAGRAMM		82194	
inspected by	data/date	Dishwashers		n°/file	mod
validated by	data/date	total blat 6	N° blat 5	Next blat -6	82196 — —

QF1/QF2	PROTEZIONE TERMICA POMPA LAVAGGIO THERMAL PROTECTION	PROTECTION THERMIQUE WARMESCHUTZ
KR3A/KR3B	CONTATTO AUSILIARIO KR3 AUXILIARY CONTACT KR3	RELAIS DE POMPE DE RINCAGE KR3 HILFSKONTAKT KR3
KR3	RELE ATTIVAZIONE POMPE RISCIAQUO RINSE PUMPS RELAY	RELAIS DE POMPE DE RINCAGE SPULPUMPENRELAIS SPULEN
M9	VENTOLA CONDENSA VAPORI STEAM CONDENSOR FAN	VENTILATEUR DE CONDENSEUR DE VAPEUR DAMPFKONDENSATORLUFTER
S5	MICROINTERRUTTORE MAGNETICO MAGNETIC SAFETY MICROSWITCH	MICROINTERRUPTEUR MAGNETIQUE MAGNETISCHER SICHERHITSSCHALTER
F1	TERMOSTATO SICUREZZA BOILER SAFETY BOOSTER HEATER THERMOSTAT	THERMOSTAT DE SICURITE DU BOYLER SICHERHEITZUNG
F3	TERMOSTATO SICUREZZA VASCA SAFETY TANK HEATER THERMOSTAT	THERMOSTAT DE SICURITE CUVE SICHERHEITS– TANKTHERMOSTAT
R3	RESISTENZA VASCA LAVAGGIO WASH TANK HEATING ELEMENT	RESISTANCE CUVE DE LAVAGE WASCHTANKHEIZUNG
R1	RESISTENZA BOILER BOOSTER HEATER HEATING ELEMENT	RESISTANCE BOYLER BOILERHEIZUNG
M5	ELETTRODOSATORE TENSIOATTIVO EL. RINSEAID INJECTOR	DOSEUR EL. PRODUIT RINCAGE NACHSPUELMITTELDOSIERGERAET
M6	ELETTROPOMPA DI SCARICO DRAIN PUMP	MOTEUR POMPE VIDANGE MOTOR LAUGENPUMPE
M3/M11	ELETTROPOMPA AUMENTO PRESSIONE RINSE BOOSTER PUMP	ELECTROPOMPE AUGMENT PRESSION DRUCKSTEIGERUNGSPUMPE
M7/M8	ELETTRODOSATORE DETERSIVO EL. DETERGENT INJECTOR	DOSEUR EL. DETERGENT SPUEL MITTELDOSIERGERAET
M1/M10	ELETTROPOMPA LAVAGGIO WASH ELECTRIC PUMP	ELECTROPOMPE LAVAGE ELEKTRISCHE UMAELZPUMPE
KR3	TELERUTTORE SICUREZZA LINEA SAFETY/LINE CONTACTOR	CONTACTEUR DE SECURITE DE LIGNE NETZSICHERHEITSSCHUTZ
KR4	TELERUTTORE RESISTENZA VASCA TANK HEATER CONTACTOR	CHASSIS DE RÉSISTANCE DE RÉSERVOIR TANK WIDERSTAND CHASSIS
KR2	TELERUTTORE RESISTENZA BOILER BOOSTER HEATER CONTACTOR	CONTACTEUR RESISTANCE BOYLER LUFTSCHUETZ F. BOILERHEITZUNG
KM1/KM2	TELERUTTORE ELETTROPOMPA LAVAGGIO WASCH PUMP CONTACTEUR	CONTACTEUR ELECTROPOMPE LAVAGE SCHUETZ F. UMWAELPUMPE
F4/F6	PROTEZIONE TERMICA ELETTROPOMPA EL. WASH PUMP THERMAL PROTECTION	PROT. THERMIQUE MOTEUR EL. POMPE THERMISHER MOTORSCHULTZ
Y1	ELETTROVALVOLA CARICAMENTO FILL SOLENOID VALVE	ELECTROVANNE DE RINCAGE MAGNETVENT FUER NACHSPUELUNG
B19	PRESSOSTATO LIVELLO DI SICUREZZA SAFETY LEVEL PRESSOSTAT	PRESSOSTAT DE NIVEAU DE SECURITE SICHERHEITSNIVEAU DRUCKSCHALTER
E2	SONDA CONTROLLO VASCA PROBE TANK HEATER	THERMOSTAT RESISTANCE CUVE THANKHEIZUNGTHERMOSTAT
E1	SONDA CONTROLLO BOILER BOOSTER HEATER THERMOSTAT	THERMOSTAT RESISTANCE BOYLER BOILERHEIZUNG
C1/C2/C3	CONDESATORE CAPACITOUR	CONDENSEUR KONDENSATOR
B10	PRESSOSTATO LIVELLO BOILER BOILER PRESSURE SWITCH	PRESSOSTAT NIVEAU SURCHAUFFER NACHSPULBOILER NIVEAUSCHALTER
B18	CONTROLLO LIVELLO BRILLANTANTE RINSE AID CONTROL LEVEL	CONTROLE NIVEAU PRODUIT DE RINCAGE STUFE GLANZMITTEL
B12	CONTROLLO LIVELLO DETERGENTE DETERGENT LEVEL	CONTROLE NIVEAU DETERGENT SPULMITTELNIVEAUSCHALTER
B16	PRESSOSTATO LIVELLO VASCA TANK PRESSURE SWITCH	PRESSOSTAT NIVEAU AIRGAP TANKDRUCKSCHALTER–NIVEAUREGLER
A1/A2/A3	SCHEDA CONTROLLO ELECTRONIC CONTROL UNIT	FICHE DE CONTROLEELECTRONIQUE ELEKTRONISCHE BEDIENUNGSKARTE
F5	FUSIBILE FUSE	FUSIBLE SICHERUNG
SIMB.	DESCRIZIONE DESCRIPTION	DESCRIPTION BESCHREIBUNG

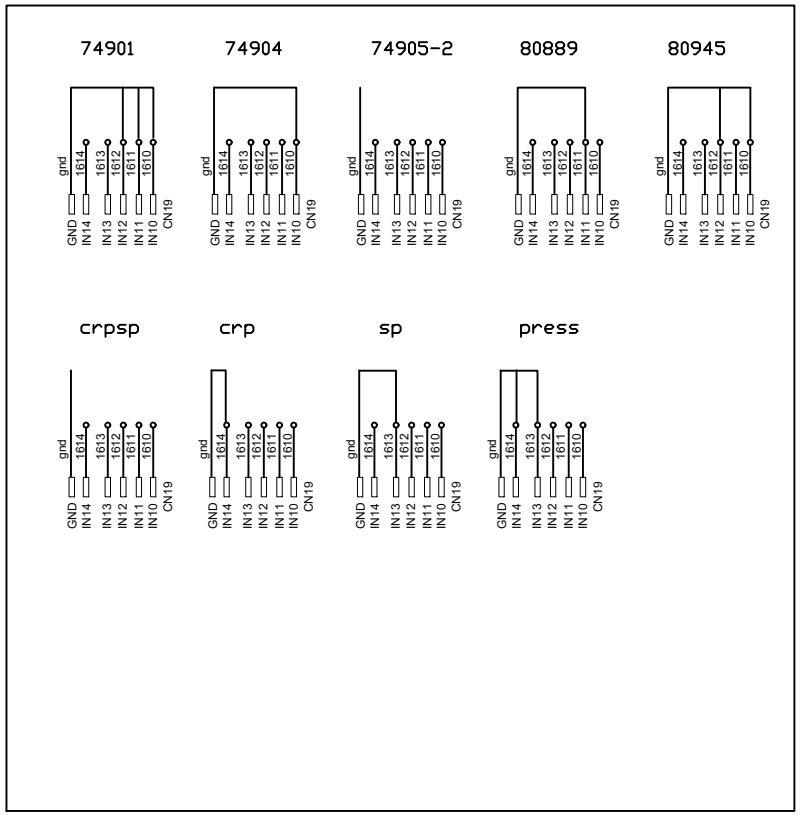

DESCRIZIONE	SOSTITUISCE	DATA
-3		
-2		

code Machine		denomination		Code
re-examined	date 05/04/18	WIRING DIAGRAMM		82194
inspected by	date	Dishwashers		n°/file mod
validated by	date	total blat 6	N° blat 6	Next blat 82196 --