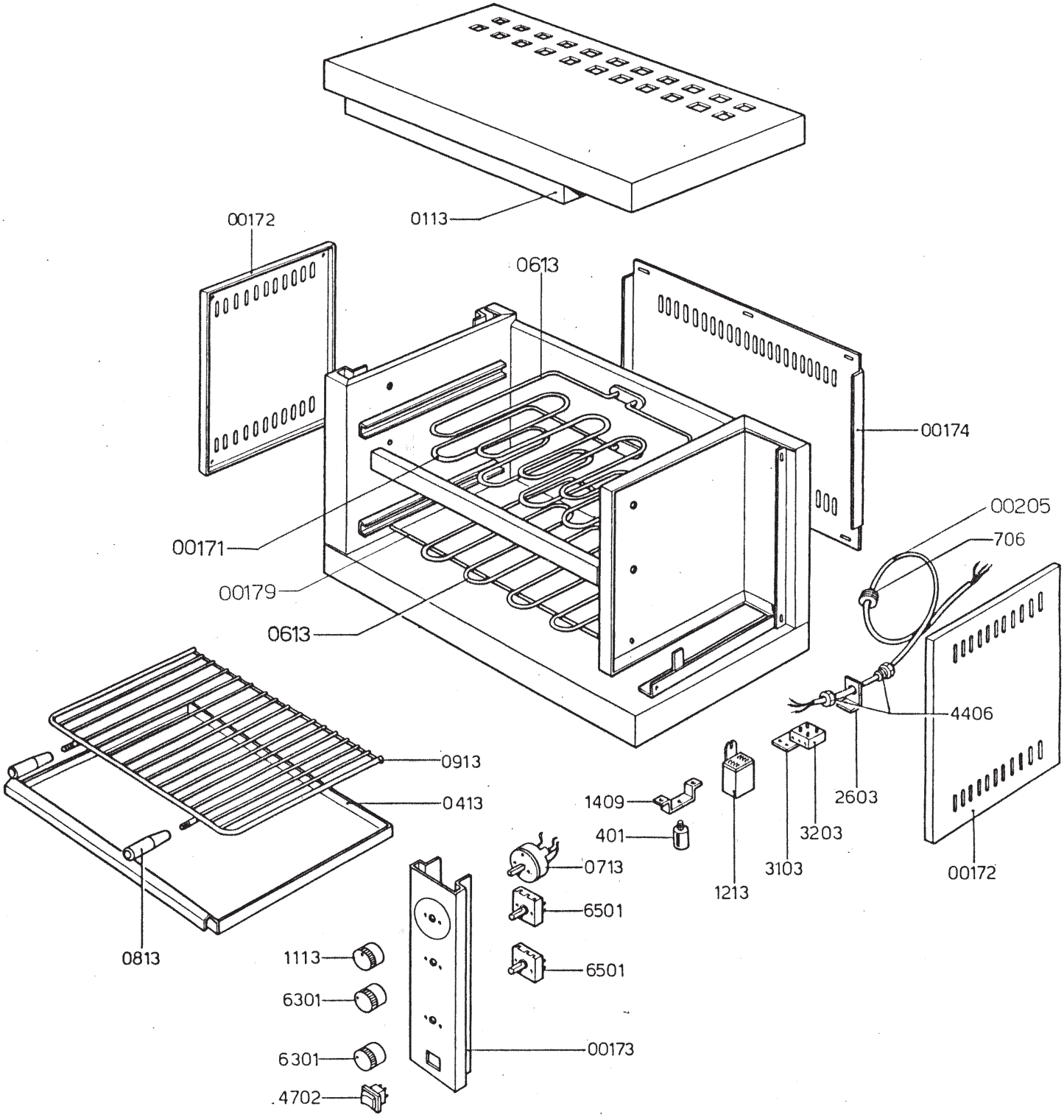
0113
00172
0613
00174
00171
00179
0613
00205
706
4406
2603
3203
3103
1213
00172
0913
0413
0813
1409
401
0713
6501
6501
1113
6301
6301
4702
00173

CODICI RICAMBIO PER FINITO / SPARE PARTS FOR THE FINISHED PRODUCT

Aggiornato al/Updated to 27/11/17

Artic./Item	Descrizione/Description	Modello/Model
060190	**TOASTER** **TOASTER**	**TSP/1**

Cons./Recom.	Pos./Posit.	Ricambio/Replacement			Prezzo/Price List
	00000113	RC00000113	CIELO ESTERNO TOASTER	EXTERNAL UPPER PANEL TS	77,46
	00000401	RC00000401	PIEDINO IN GOMMA SEF-TS-IR	RUBBER FOOT	4,08
	00000413	RC00000413	BACINELLA TOASTER	DRIP TRAY	48,00
*	00000613	RC00000613	RESISTENZA ELETT. 1.5KW 230V	HEATING ELEMENT	49,65
	00000706	RC00000706	PASSACAVO	CABLE GLAND	3,97
*	00000713	RC00000713	TIMER	TIMER	28,14
	00000813	RC00000813	IMPUGNATURA	HANDLE	8,38
	00000913	RC00000913	GRIGLIA CROMATA TOASTER	CHROMIUM-PLATED GRID TS	37,51
	00001113	RC00001113	MANOPOLA PER TIMER TOASTER	KNOB FOR TIMER TS	6,62
*	00001213	RC00001213	RELAIS 16A 220V TOASTER	RELAY	45,34
*	00004702	RC00004702	INTERRUTTORE TS-IR	SWITCH	13,57
	00006301	RC00006301	MANOPOLA SIMMOSTATO	KNOB FOR ENERGY REGULATOR TS-SE-SEF-SEL	5,74
*	00006501	RC00006501	SIMMOSTATO	ENERGY REGULATOR	23,94
*	00171000	RC00171000	RESISTENZA ELETTRICA 1KW 230V	HEATING ELEMENT	48,88
	00172000	RC00172000	PANNELLO LATERALE TSP	SIDE PANEL TSP	24,25
	00173000	RC00173000	CRUSCOTTO TSP	CONTROL PANEL TSP	23,23
	00174000	RC00174000	SCHIENALE TSP	BACK PANEL TSP	20,30
	00179000	RC00179000	TONDINO SUPPORTO RESISTENZE TS	HEATING ELEMENT SUPPORT BAR TS	7,42
	00304000	RC00304000	MORSETTO EQUIPOTENZIALE COMPLETO	EQUIPOTENTIAL CONNECTING BLOCK	6,62

L'azienda si riserva il diritto di apportare ulteriori aggiornamenti senza preavviso. / The data may be updated without prior warning