UNTIL 05-2007

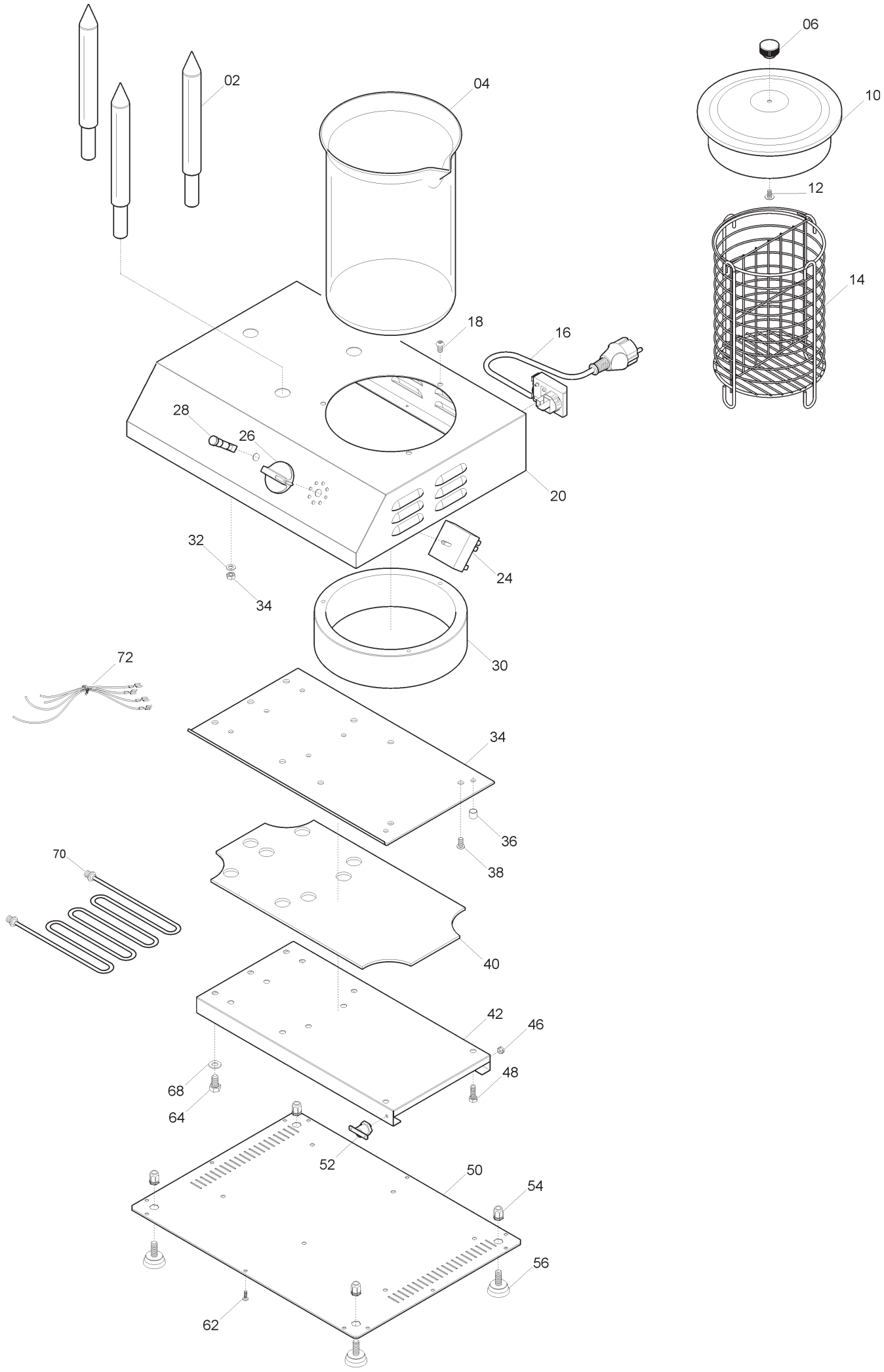

Hot Dog 3 Y06 - until 2007.05

Rife	Nome prodotto	Codice
2	PUNTATORE ANOD. HOT DOG Y06	GM2200010
4	BICCHIERE HOT DOG Y09	GM3556350
6	POMEL. cass. PD-CRT-LEI-TPO-Q	IGS333
10	COPERCHIO HOT DOG Y06	GM2200020
14	CESTELLO HOT DOG Y06	GM3047000
16	CAVO SHUKO 3X1 + KADO 1/3	GM5506040
20	CARCASSA 3 CHIODI HOT DOG Y06	GM2486601
24	REGOLAT.DI ENERGIA SALAMAND.PRO G	IB5256500
26	MANOP.X REG.DI ENERG.SALAM.PRO G	IB4206412
28	LAMPADA SPIA	IB5846400
30	ANELLO ALLUMINIO HD Y06	GM2100020
34	PIANO DISSIPATORE ALL. HOT DOG Y06	GM2486604
40	CARTENE HD Y06	GM6206500
42	OMEGA HOT DOG Y06	GM2486603
50	FONDELLO HOT DOG Y06	GM2486605
52	TERMOSTATO DI SICUREZZA HD Y06	GM5866100
56	Piedino PD-CRT-LEI-TPO	IGS360
70	Resist.sup. sx/dx 220 CRT L/R	IGS402C
72	CABLAGGIO HD Y06	GM5556100