DESPIECE TECNICO

Lavavajillas de capota
Lave-vaisselle d' capot
Pass-through dishwasher
Durchschub geschirrspüler
Lavastoviglie a cappuccio
Lava-louças de capota

Modelos:

FI-80 W

Junio 2010 June

Revisado Septiembre 2013 September Revised

FAGOR

FAGOR INDUSTRIAL

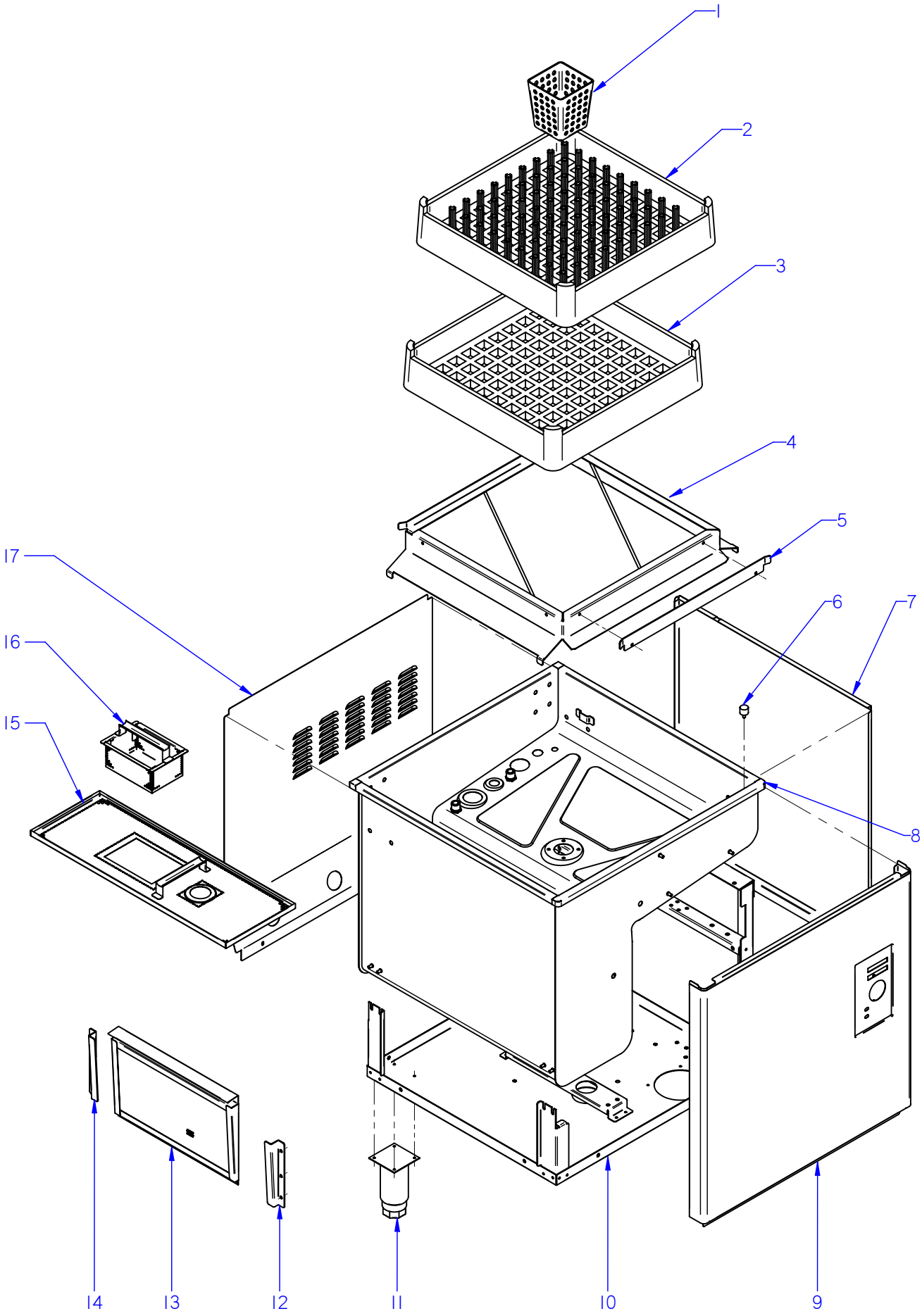

ITEM MARCADO EN COLOR = REPUESTO RECOMENDADO
COLOURED ITEM = RECOMMENDED SPARE PART

N plano	Firma	Fecha	Aparato		Lamina	
C-2659		2010-06	MUEBLE / FITTING LAVAVAJILLAS FI-80 W		1	Fagor Industrial S.Coop. Oñate

MOD.	LAVAVAJILLAS DE CAPOTA PASS THROUGH DISHWASHER	ZONA / ZONE	MUEBLE / FITTING	PLANO DIAGRAM	C-2659

ITEM	CODIGO CODE	DENOMINACION	NAME	FI-80 W							NOTAS
1	Z655314000	CESTILLO CUBIERTOS	CUTLERY BASKET	2							
2	Z655302000	CESTILLO PLATOS CP-16-18	PLATE BASKET CP-16-18	1							
3	Z655301000	CESTILLO BASE CT-10	BASE BASKET CT-10	1							
4	Z710377000	BASE CESTILLO COMPLETA	COMPLETE BASKET BASE	1							
5	Z710326000	GUIA CESTILLO	BASKET GUIDE	1							
	Q152004000	TORNILLO APLAST. M5x13 A304	MUSHROOM HEAD BOLT M5x13 A	2							
	Q162030000	TUERCA EXAGONAL M5	HEXAGONAL NUT M5	2							
	Q308000000	ARANDELA DUBO A.8	DUBO A.8 WASHER	14							
6	Z710316000	AMORTIGUADOR	DAMPER	2							
	Q262040000	ARANDELA GROW. A6 A.304	WASHER GROW. A6 A.304	2							
	Q162040000	TUERCA EXAGONAL M6	HEXAGONAL NUT M6	2							
	Q012073000	TORNILLO EXAGONAL M12x20	HEXAGONAL BOLT M12x20	3							
	Q306024000	JUNTA 18x12.2x1.5	SEAL 18x12.2x1.5	3							
	Q162070000	TUERCA EXAGONAL M12	HEXAGONAL NUT M12	3							
7	Z749311000	PANEL LATERAL DCHO	RIGHT SIDE PANEL	1							
S/Nº	Z749312000	PANEL LATERAL IZDO.	LEFT SIDE PANEL	1							
8	Z748902000	CUBA COMPLETA W 80	COMPLETE TUB FI-80	1							ELIMINADO 27.07.10
8	Z748417000	CUBA COMPLETA FI-80 W	COMPLETE TUB FI-80	1							INTRODUCIDO 27.07.10
	Q232040000	ARANDELA A6	WASHER A6	4							
	Q302022000	ARANDELA 16x6x1.2 A.304	WASHER 16X6X1.2 A.304	4							
	Q262040000	ARANDELA GROW. A6 A.304	WASHER GROW. A6 A.304	8							
	Q162040000	TUERCA EXAGONAL M6	HEXAGONAL NUT M6	8							
9	Z712926000	PANEL FRONTAL W	FRONT PANEL W	1							ELIMINADO 29.01.2013
9	12048218	PANEL FRONTAL FI FAGOR COMP.	FRONT PANEL FI FAGOR COMP.	1							INTRODUCIDO 29.01.2013
S/Nº	Z206135000	CHECK LIST LAVAVAJILLAS FAGOR	CHECK LIST	1							INTRODUCIDO 19.07.10
10	Z749303000	ARMAZON COMPLETO FI-80	COMPLETE FRAME FI-80	1							
11	X260151000	PATA REGULABLE	ADJUSTABLE LEG	4							
	Q411304000	REMACHE AVIBULB Ø 4,8	AVIBULB RIVET Ø4.8	16							
12	Z710309000	GUIA FILTRO ANTERIOR	FRONT FILTER GUIDE	1							
	Q232040000	ARANDELA A6	WASHER A6	2							
	Q162040000	TUERCA EXAGONAL M6	HEXAGONAL NUT M6	2							

MOD.	LAVAVAJILLAS DE CAPOTA PASS THROUGH DISHWASHER	ZONA / ZONE	MUEBLE / FITTING	PLANO DIAGRAM	C-2659

ITEM	CODIGO CODE	DENOMINACION	NAME	FI-80 W							NOTAS
13	Z710907000	FILTRO COMPLETO	COMPLETE FILTER	1							ELIMINADO 18.02.2013
13	12048626	FILTRO	FILTER	1							INTRODUCIDO 18.02.2013
14	Z710310000	GUIA FILTRO POSTERIOR	REAR FILTER GUIDE	1							
	Q232040000	ARANDELA A6	WASHER A6	2							
	Q162040000	TUERCA EXAGONAL M6	HEXAGONAL NUT M6	2							
15	Z710801000	BANDEJA COMPLETA	COMPLETE TRAY	1							
16	Z710804000	RECOGEDOR DESPERDICIOS	WASTE COLLECTION	1							
17	Z742905000	PANEL POSTERIOR FI-80	REAR PANEL FI-80	1							
	3713500000	PERFIL CUBREARISTAS PLASTICO	PLASTIC EDGE COVER PROFILE	2							
	Q152004000	TORNIL, APLASTADO M5x13 A304	FLAT HEADED BOLT M5x13 A304	2							
	Z712911000	TOPE 80x80x20	BUFFER 80x80x20	6							

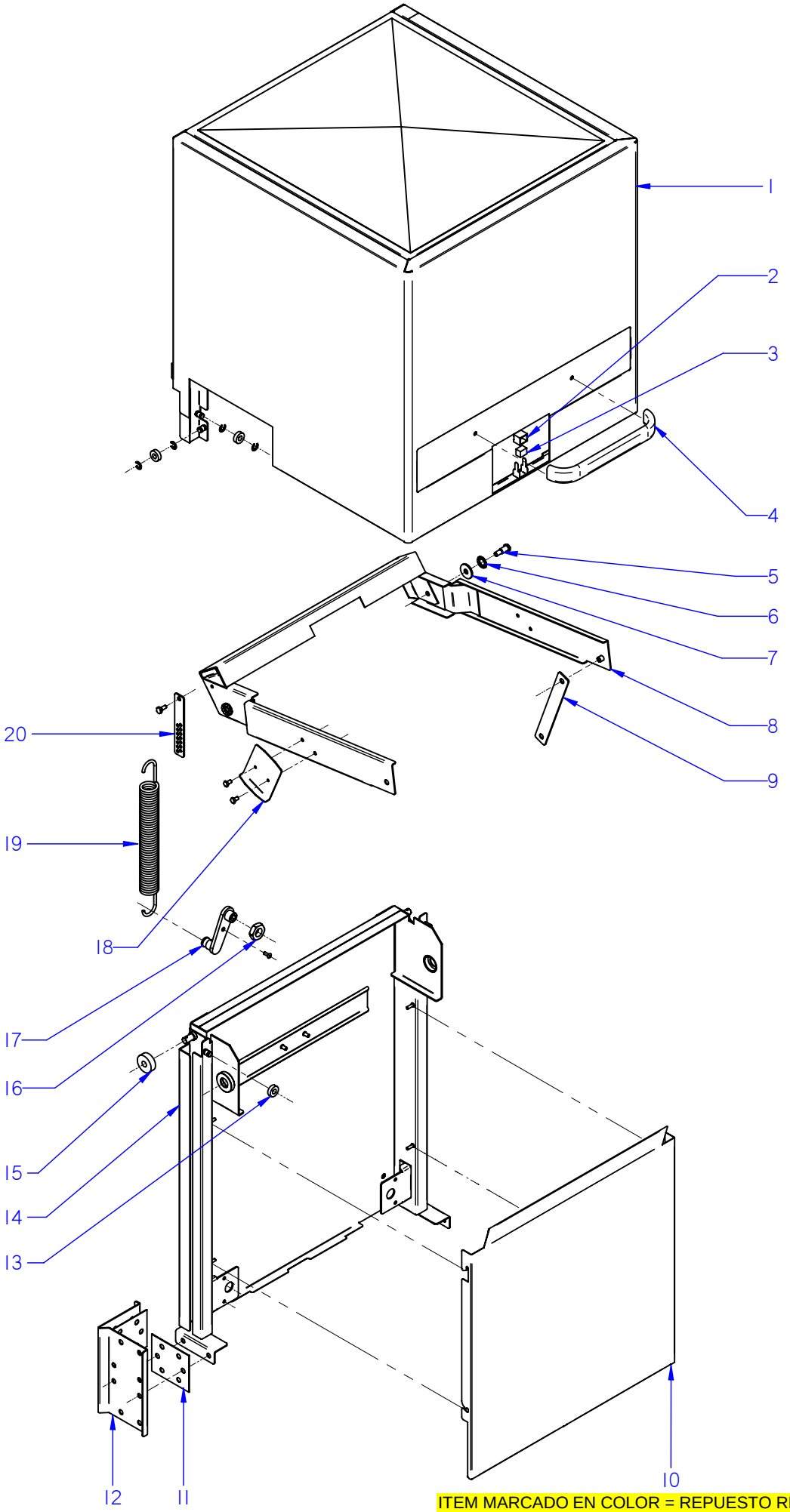

ITEM MARCADO EN COLOR = REPUESTO RECOMENDADO
COLOURED ITEM = RECOMMENDED SPARE PART

N plano	Firma	Fecha	Aparato	CAPO / HOOD	Lamina	
C-2660		2010-06	LAVAVAJILLAS FI-80 W		2	Fagor Industrial S.Coop. FAGOR Oñate

MOD.	LAVAVAJILLAS DE CAPOTA PASS THROUGH DISHWASHER	ZONA / ZONE	CAPO / HOOD	PLANO DIAGRAM	C-2660

ITEM	CODIGO CODE	DENOMINACION	NAME	FI-80 W							NOTAS
1	Z710557000	CAPO COMPLETO	COMPLETE STRAIGHT HOOD	1							
	Z710515000	CASQUILLO RODANTE	REVOLVING BUSHING	4							
	Q271006000	ARANDELA DE SEGURIDAD 8	SAFETY WASHER 8	8							
2	Z200507000	PROTECTOR IMAN	MAGNET	1							
3	Z200506000	IMAN	MAGNET PROTECTOR	1							
4	Z400542000	ASA LVS.	AD HOOD HANDLE	1							
	Q032041000	TORNILLO ALOMADO M6x10	CURVED SCREW M6x10	2							
	Q308002000	ARANDELA DUBO A6 NYLON	WASHER DUBO A6 NYLON	2							
5	Z710542000	EJE DE GIRO	ROTARY SHAFT	2							
6	Z710541000	RODAMIENTO 6200-2RS1	BEARING 6200-2RS1	2							
7	Q308012000	ARANDELA 30x10x3	WASHER 30x10x3	2							
8	Z710517000	BALANCIN COMPLETO	COMPLETE ROCKER ARM	1							
	Q232050000	ARANDELA A8	WASHER A8	2							
	Q262050000	ARANDELA GROW. A8 A.304	WASHER GROW. A8 A.304	2							
	Q162050000	TUERCA EXAGONAL M8x1 INOX.	HEXAGONAL NUT M8x1 INOX.	2							
9	Z710523000	BIELA	ROD	2							
	Q308012000	ARANDELA 30x10x3	WASHER 30x10x3	8							
	Q232040000	ARANDELA A6	WASHER A6	4							
	Q262040000	ARANDELA GROW. A6 A.304	WASHER GROW. A6 A.304	4							
	Q012041000	TORNILLO EXAGON. M6x10 A.304	HEXAGONAL BOLT. M6x10 A.304	4							
10	Z718932000	CUBIERTA RESORTES	SPRING COVER	1							
11	Z710547000	JUNTA SOPORTE CAPO	HOOD SUPPORT SEAL	4							
	Q012053000	TORNILLO EXAGON. M8x20 A.304	HEXAGONAL BOLT. M8x20 A.304	10							
	Q013153000	TORNILLO EX M-8x20 LATON CRO.	HEX BOLT M-8x20 CHR. BRASS	4							
	Q232050000	ARANDELA A8	WASHER A8	14							
	Q262050000	ARANDELA GROW. A8 A.304	WASHER GROW. A8 A.304	14							
	Q162050000	TUERCA EXAG. M8x1 INOX.	HEXAG. SCREW M8x1 STAINLES	10							
12	Z710539000	SOPORTE GUIA CAPO	HOOD GUIDE SUPPORT	2							
13	Z710515000	CASQUILLO RODANTE	REVOLVING BUSHING	2							
	Q271006000	ARANDELA DE SEGURIDAD 8	SAFETY WASHER 8	4							

MOD.	LAVAVAJILLAS DE CAPOTA PASS THROUGH DISHWASHER	ZONA / ZONE	CAPO / HOOD	PLANO DIAGRAM	C-2660

ITEM	CODIGO CODE	DENOMINACION	NAME	FI-80 W							NOTAS
14	Z710524000	GUIA CAPO COMPLETA	COMPLETE HOOD GUIDE	1							
	Q352024000	PASADOR DE ALETA 4x25	WING PIN 4x25	2							
15	Z710546000	CASQUILLO	BUSHING	2							
16	Q222016000	TUERCA EXAGONAL M20	HEXAGONAL BOLT M20	2							
17	Z710529000	TENSOR MUELLE	TENSIONING SPRING	2							
	Q152004000	TORNILLO APLAST. M5x13 A 304	MUSHROOM HEAD BOLT M5x13	2							
18	Z710548000	ESCUADRA TOPE	BUFFER BRACKET	2							
	Q012041000	TORN.EXA. M6X10 A.304	HEXAGONAL BOLT. M6X10 A.304	4							
	Q242040000	ARANDELA ABANICO	FAN WASHER	4							
19	Z710528000	RESORTE 29230	SPRING 29230	2							
20	Z710543000	ENGANCHE MUELLE	SPRING HOOK	2							
	Z710544000	EJE ENGANCHE MUELLE	SPRING HOOK SHAFT	2							
	Q232040000	ARANDELA A6	WASHER A6	2							
	Q222012000	TUERCA AUTOB. M6	SELF-LOCK NUT M6	2							

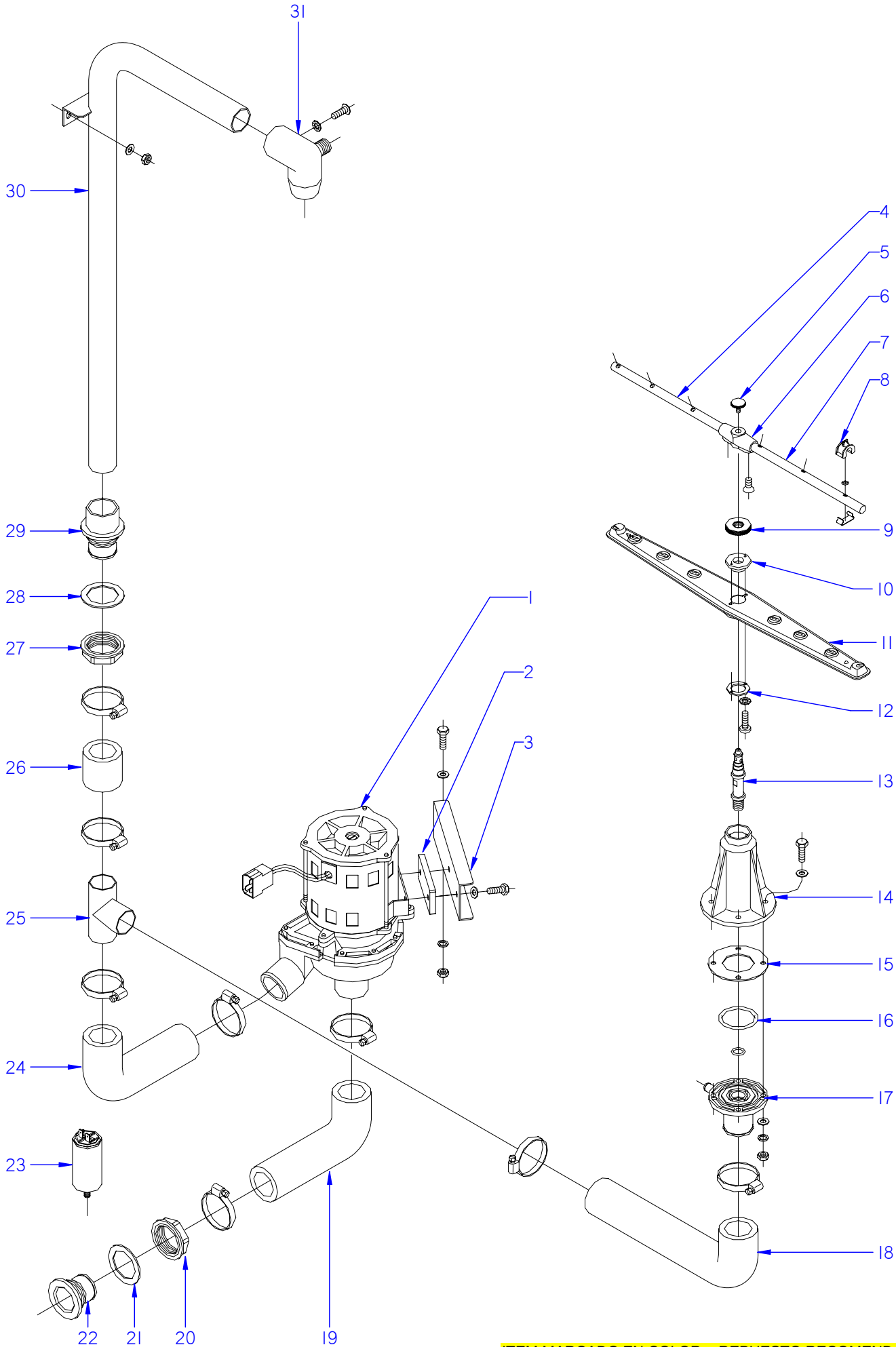

ITEM MARCADO EN COLOR = REPUESTO RECOMENDADO
COLOURED ITEM = RECOMMENDED SPARE PART

N plano	Firma	Fecha	Aparato	Lamina
C-2661		2010-06	PARTE FUNCIONAL LAVADO / WASH FUNCTIONAL PART LAVAVAJILLAS FI-80 W	3

Fagor Industrial S.Coop. FAGOR
Onate

MOD.	LAVAVAJILLAS DE CAPOTA PASS THROUGH DISHWASHER	ZONA / ZONE	PARTE FUNCIONAL LAVADO WASH FUNCTIONAL PART	PLANO DIAGRAM	C-2661

ITEM	CODIGO CODE	DENOMINACION	NAME	FI-80 W							NOTAS
1	Z203511000	BOMBA DE LAVADO 60 HZ.	WASH PUMP 60 Hz.	1							
	Z201083000	TURBINA 60 HZ.78 MM	TURBINE 60 HZ.78 MM	1							
	Z201081000	CONJUNTO JUNTA Y RETEN	JOINT BOARD AND SEAL	1							
2	Z201003000	BASE BOMBA LAVADO 1003016	WASH PUMP BASE 1003016	1							
	Q232040000	ARANDELA A6	WASHER A6	2							
	Q012042000	TORNILLO EXAGONAL M6x15	HEXAGONAL BOLT M6x15	2							
3	Z711002000	SOPORTE MOTOBOMBA POSTER.	REAR MOTOR PUMP SUPPORT	1							
	Q012042000	TORNILLO EXAGONAL M6x15	HEXAGONAL BOLT M6x15	2							
	Q232040000	ARANDELA A6	WASHER A6	2							
	Q262040000	ARANDELA GROW. A6 A.304	WASHER GROW. A6 A.304	2							
	Q162040000	TUERCA EXAGONAL M6	HEXAGONAL NUT M6	2							
4	Z208712000	RAMA ACLARADO IZQUIERDA	LEFT RINSE BRANCH	2							
5	Q152016000	TORNILLO ESPECIAL M.5x0.8	SPECIAL BOLT M.5X0.8	2							
6	Z201903000	SOPORTE RAMA ACLARADO COM.	COM. RINSE BRANCH SUPPORT	2							
	Q042021000	TORNILLO AVELLAN. M4x10 A304	COUNTERSUNK BOLT M4x10 A30	4							
7	Z208713000	RAMA ACLARADO DERECHA	RIGHT RINSE BRANCH	2							
8	Z201905000	TOBERA ACLARADO	RINSE NOZZLE	12							
	Q307036000	JUNTA TOR. 5.28X8.84X1.78	O-RING 5,25X8,84X1,78	12							
	Z201906000	ENGANCHE TOB. ACLA.19728	ANCHORAGE NOZZLE	12							
9	Z200705000	TUERCA ESPECIAL	SPECIAL NUT	2							
10	Z650704000	ENGANCHE DISTRIBUIDOR	DISTRIBUTOR CATCH	2							ELIMINADO 11.02.2013
10	12045103	ENGANCHE DISTRIBUIDOR	DISTRIBUTOR CATCH	2							INTRODUCIDO 11.02.2013
11	Z650716000	DISTRIBUIDOR MONTADO	COMPLETE DISTRIBUTOR	2							
12	Z650711000	AMARRE ENGANCHE DISTRIBUID.	ANCHORAGE DISTRIBUTOR	2							
	Q152015000	TORNILLO ALOMADO M3x6	CURVED SCREW M3X10	4							
	Q242010000	ARANDELA ABANICO A3 A.304	FAN WASHER A3 A.304	4							
13	Z200704000	EJE CENTRAL	CENTRAL SHAFT	2							
14	Z740705000	SOPORTE DISTRIBUIDOR INFERI.	LOWER DISTRIBUTION SUPPORT	1							
15	Z710714000	JUNTA DE GOMA	RUBBER SEAL	1							
16	Q307057000	JUNTA TORICA 47.22x54.28x3.53	O-RING 47.22x54.28x3.53	1							
	Q307050000	JUNTA TORICA 13.94x19.18x2.6	O-RING 13.94x19.18x2.6	1							

MOD.	LAVAVAJILLAS DE CAPOTA PASS THROUGH DISHWASHER	ZONA / ZONE	PARTE FUNCIONAL LAVADO WASH FUNCTIONAL PART	PLANO DIAGRAM	C-2661

ITEM	CODIGO CODE	DENOMINACION	NAME	FI-80 W							NOTAS
17	Z710706000	PASAMUROS	BUSHING	1							
	Q012044000	TORNILLO EXAGONAL M6x25	HEXAGONAL BOLT M6x25	4							
	Q306050000	ARANDELA 6x12x1.5	WASHER 6x12x1.5	4							
	Q232040000	ARANDELA A6	WASHER A6	4							
	Q262040000	ARANDELA GROW. A6 A.304	WASHER GROW. A6 A.304	4							
	Q162040000	TUERCA EXAGONAL M6	HEXAGONAL NUT M6	4							
18	Z740903000	CONDUCTO INFERIOR	LOWER PIPE	1							
	Q881307000	ABRAZADERA 40-60	CLAMP 40-60	2							
19	Z710904000	CONDUCTO ASPIRACION	EXTRACTOR PIPE	1							
	Q881307000	ABRAZADERA 40-60	CLAMP 40-60	2							
20	Z710708000	TUERCA PASAMUROS	WALL BUSHING NUT	1							
21	Q307058000	ARANDELA 60x44x2	WASHER 60x44x2	2							
22	Z710903000	PASAMUROS ASPIRACION	EXTRACTOR BUSHING	1							
23	V321300000	CONDENSADOR 10 M,F,	CONDENSER 10 M,F,	1							
	Q162050000	TUERCA EXAGONAL M8x1 INOX,	HEXAGONAL NUT M8x1 INOX.	2							
24	Z740901000	CONDUCTO IMPULSION	IMPULSE PIPE	1							
	Q881307000	ABRAZADERA 40-60	CLAMP 40-60	2							
25	Z740905000	TE IMPULSION	IMPULSE T	1							
26	Z740902000	CONDUCTO SUPERIOR	UPPER PIPE	1							
	Q881307000	ABRAZADERA 40-60	CLAMP 40-60	2							
27	Z710708000	TUERCA PASAMUROS	WALL BUSHING NUT	1							
28	Q307058000	ARANDELA 60x44x2	WASHER 60x44x2	1							
29	Z740701000	PASAMUROS ARBOL LAVADO	WASH CAM BUSHING	1							
30	Z710709000	ARBOL LAVADO COMPLETO	COMPLETE WASH CAM	1							
	Q232040000	ARANDELA A6	WASHER A6	2							
	Q162040000	TUERCA EXAGONAL M6	HEXAGONAL NUT M6	2							
31	Z740703000	SOPORTE DISTRIBUIDOR SUPER.	UPPER DISTRIBUTION SUPPORT	1							
	Q152004000	TORNILLO APLAST. M5x13 A.304	MUSHROOM HEAD BOLT M5x13 A	1							
	Q242030000	ARANDELA ABANICO A5 A.304	FAN WASHER A5 A.304	1							

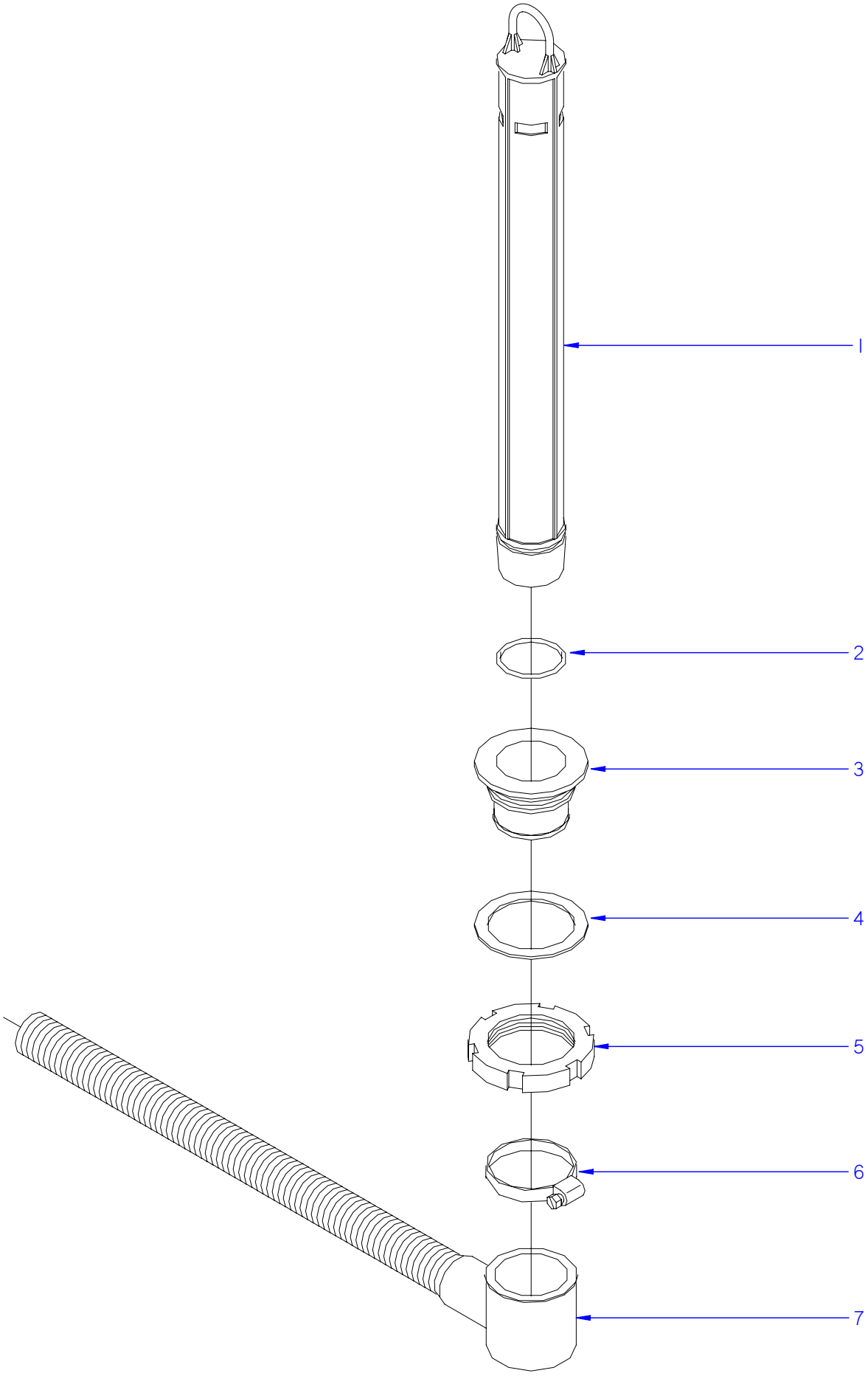

ITEM MARCADO EN COLOR = REPUESTO RECOMENDADO
COLOURED ITEM = RECOMMENDED SPARE PART

N plano	Firma	Fecha	Aparato	Lamina	
C-2662		2010-06	PARTE FUNCIONAL DESAGÜE / DRAINAGE FUNCTIONAL PART LAVAVAJILLAS FI-80 W	4	Fagor Industrial S.Coop. FAGOR Oñate

MOD.	LAVAVAJILLAS DE CAPOTA PASS THROUGH DISHWASHER	ZONA / ZONE	PARTE FUNCIONAL DESAGÜE DRAINAGE FUNCTIONAL PART	PLANO DIAGRAM	C-2662

ITEM	CODIGO CODE	DENOMINACION	NAME	FI-80 W							NOTAS
1	Z710901000	ALIVIADERO	OVERFLOW	1							
2	Q307051000	JUNTA TOR.36.17X41.41X2.6	O-RING 36.17X41.41X2.6	1							
3	Z710902000	PASAMUROS DESAGUE	DRAINAGE BUSHING	1							
4	Q307059000	JUNTA 72x56x2	SEAL 72x56x2	1							
5	Q220001000	TUERCA RANURADA	GROOVED NUT	1							
6	Q881307000	ABRAZADERA 40-60	CLAMP 40-60	1							
7	Z200910000	MANGUERA DESAGUE	DRAINAGE HOSE	1							

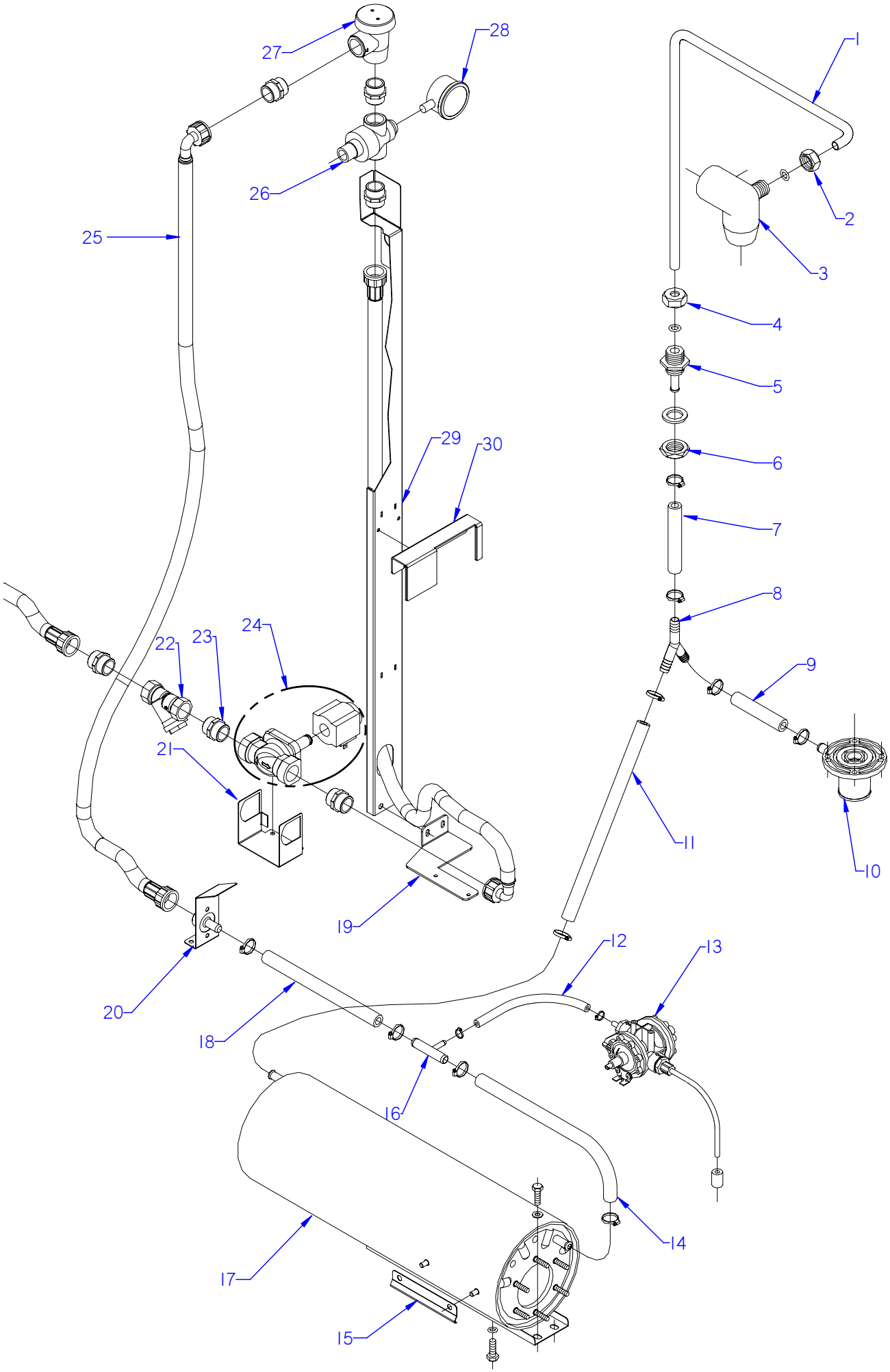

ITEM MARCADO EN COLOR = REPUESTO RECOMENDADO
COLOURED ITEM = RECOMMENDED SPARE PART

N plano	Firma	Fecha	Aparato	Lamina	
C-2663		2010-06	PARTE FUNCIONAL ACLARADO / RINSE FUNCTIONAL PART LAVAVAJILLAS FI-80 W	5	Fagor Industrial S.Coop. FAGOR Oñate

MOD.	LAVAVAJILLAS DE CAPOTA PASS THROUGH DISHWASHER	ZONA / ZONE	PARTE FUNCIONAL ACLARADO RINSE FUNCTIONAL PART	PLANO DIAGRAM	C-2663

ITEM	CODIGO CODE	DENOMINACION	NAME	FI-80 W							NOTAS
1	Z711903000	CONDUCCION ACLARADO COMP.	COMP. RINSE PIPE	1							
2	Q223107000	TUERCA M.20x2.5	NUT M.20X2.5	1							
	Q307048000	JUNTA TORICA Ø9.12X16.18X3.53	O-RING Ø9.12X16.18X3.53	1							
3	Z740703000	SOPORTE DISTRIBUIDOR SUPER.	UPPER DISTRIBUTION SUPPORT	1							
	Q152004000	TORNILLO APLAST. M5x13 A.304	MUSHROOM HEAD BOLT M5x13 A	1							
	Q242030000	ARANDELA ABANICO A5 A.304	FAN WASHER A5 A.304	1							
4	Q223107000	TUERCA M.20x2.5	NUT M.20X2.5	1							
	Q307048000	JUNTA TORICA Ø9.12X16.18X3.53	O-RING Ø9.12X16.18X3.53	1							
5	Z711904000	PASAMUROS ACLARADO	RINSE BUSHING	1							
	Q307032000	JUNTA Ø 32X21X3	SEAL Ø 32X21X3	1							
6	Q223023000	TUERCA EXAGONAL 5-8 LATON	HEX NUT 5-8 BRASS	1							
7	3676900000	TUBO GOMA NEGRA Ø 17*10	BLACK RUBBER PIPE Ø 17*10	1							
	Q881302000	ABRAZADERA 12-20	CLAMP 12-20	2							
8	Z201106000	RACORD EN Y	Y-CONNECTION	1							
9	3676900000	TUBO GOMA NEGRA Ø 17*10	BLACK RUBBER PIPE Ø 17*10	1							
	Q881302000	ABRAZADERA 12-20	CLAMP 12-20	2							
10	Z710706000	PASAMUROS	BUSHING	1							
	Q012044000	TORNILLO EXAGONAL M6x25	HEXAGONAL BOLT M6x25	4							
	Q306050000	ARANDELA 6x12x1.5	WASHER 6x12x1.5	4							
	Q262040000	ARANDELA GROW. A6 A.304	WASHER GROW. A6 A.304	4							
	Q162040000	TUERCA EXAGONAL M6	HEXAGONAL NUT M6	4							
11	3676900000	TUBO GOMA NEGRA Ø 17*10	BLACK RUBBER PIPE Ø 17*10	1							
	Q881302000	ABRAZADERA 12-20	CLAMP 12-20	2							
12	3704000000	TUBO GOMA NEGRO Ø10,5*5	BLACK RUBBER PIPE Ø 10.5*5	1							
	Q881308000	ABRAZADERA 8-14L	CLAMP 8-14L	2							
13	Z211109000	DOSIFICADOR TENSOACTIVO N-6	SURFACE ACT. DISP. N-6	1							ELIMINADO 18.06.2012
13	12045206	DOSIFICADOR_ABRILLANTADOR_A(	RINSE AID DISPENSER	1							INTRODUCIDO 18.06.2012
S/Nº	Z448618000	CONDUCTO ABRILLANTADOR	RINSE AID PIPE	1							
S/Nº	Z701152000	PESO FILTRO	FILTER WEIGHT	1							
14	3676900000	TUBO GOMA NEGRA Ø 17*10	BLACK RUBBER PIPE Ø 17*10	1							
	Q881302000	ABRAZADERA 12-20	CLAMP 12-20	2							

MOD.	LAVAVAJILLAS DE CAPOTA PASS THROUGH DISHWASHER	ZONA / ZONE	PARTE FUNCIONAL ACLARADO RINSE FUNCTIONAL PART	PLANO DIAGRAM	C-2663

ITEM	CODIGO CODE	DENOMINACION	NAME	FI-80 W							NOTAS
15	Z748008000	SOPORTE BULBO TERMOSTATO	THERMOSTAT BULB SUPPORT	1							
	Q232040000	ARANDELA A-6	WASHER A6	1							
	Q162040000	TUERCA EXAGONAL M-6	HEXAGONAL NUT M6	1							
	Q262040000	ARANDELA GROW. A6 A.304	WASHER GROW. A6 A.304	1							
16	Z601157000	TOMA PRESION	PRESSURE INTAKE	1							
17	Z201710000	CALDERIN COMPLETO	COMPLETE DRUM	1							ELIMINADO 15.10.2012
17	12046893	CALDERIN COMPLETO AF. LC. W	COMPLETE DRUM AF. LC. W	1							INTRODUCIDO 15.10.2012
	Q012031000	TORNIL. EXAGONAL M5x10 A.304	HEXAGONAL BOLT M5X10 A.304	2							
	Q232030000	ARANDELA A5	WASHER A5	2							
	Q012063000	TORNIL. EXAGONAL M10x20 A.304	HEXAGONAL BOLT M10x20 A.304	1							
	Q307048000	JUNTA TORICA Ø9.12X16.18X3.53	O-RING Ø9.12X16.18X3.53	1							
18	3676900000	TUBO GOMA NEGRA Ø 17*10	BLACK RUBBER PIPE Ø 17*10	1							
	Q881302000	ABRAZADERA 12-20	CLAMP 12-20	2							
19	Z718448000	SOPORTE W INF AR	W INF AR SUPPORT	1							
	Q411304000	REMACHE AVIBULB.Ø4,8	AVIBULB.Ø4,8 RIVET	4							
	Q152004000	TORNILLO APLAST. M5x13 A.304	FLAT HEADED BOLT M5x13	2							
20	Z718414000	EMPALME COMPLETO 3/4	CONNECTION 3/4	1							
21	Z718449000	SOPORTE EV W	EV W SUPPORT	1							
22	Z102308000	FILTRO 3/4	FILTER 3/4	1							
23	Z102301000	MANGUITO 3/4"	HOSE 3/4"	6							
24	Z718415000	ELECTROVALVULA USA	ELECTROVALVE USA	1							
	Z718445000	BOBINA USA	BOBBIN USA	1							
25	Z602121000	MANGUERA ENTRADA AGUA	WATER INTAKE HOSE	3							
	Q012031000	TORNIL. EXAGONAL M5x10 A.304	HEXAGONAL BOLT M5X10 A.304	2							
	Q232030000	ARANDELA A5	WASHER A5	2							
26	Z102307000	REDUCTOR PRESION	PRESSURE REDUCER	1							
27	Z718418000	VALVULA ANTIRRETORNO W	CHECK VALVE W	1							
28	Z271125000	MANOMETRO W NSF	MANOMETER W NSF	1							
29	Z718447000	SOPORTE W ANTIRRETORNO	W CHECK SUPPORT	1							
	3713500000	PERFIL CUBREARISTAS PLASTICO	PLASTIC EDGE COVER PROFILE	1							
30	Z718440000	SEPARADOR CONDUCCION W	W DRIVING SPACER	1							

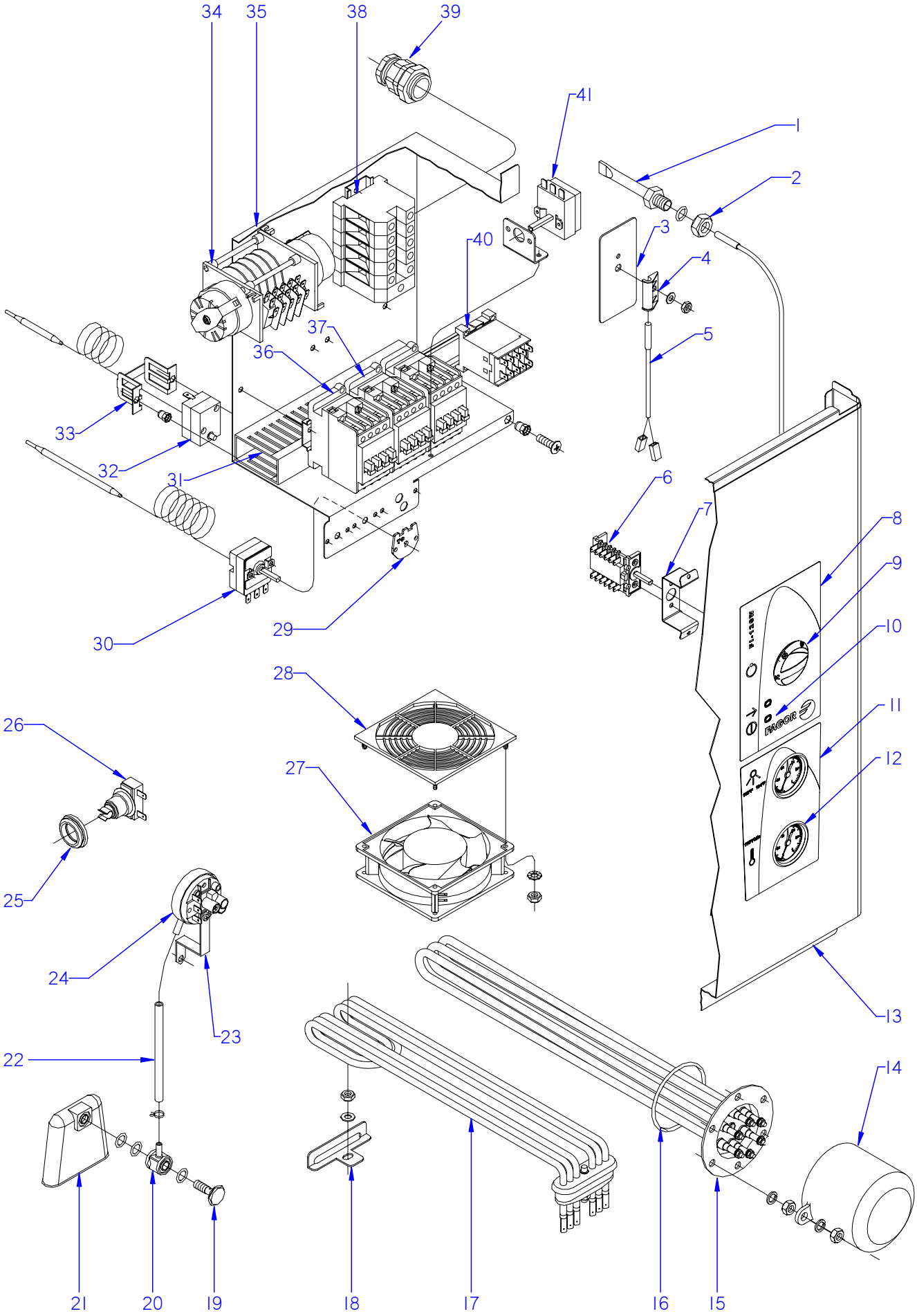

ITEM MARCADO EN COLOR = REPUESTO RECOMENDADO
COLOURED ITEM = RECOMMENDED SPARE PART

N plano	Firma	Fecha	Aparato	Lamina	
C-2664		2010-06	PARTE FUNCIONAL ELECTRICA / ELECTRICS FUNCTIONAL PART LAVAVAJILLAS FI-80 W	6	Fagor Industrial S.Coop. FAGOR Onate

MOD.	LAVAVAJILLAS DE CAPOTA PASS THROUGH DISHWASHER	ZONA / ZONE	PARTE FUNCIONAL ELECTRICA ELECTRICS FUNCTIONAL PART	PLANO DIAGRAM	C-2664

ITEM	CODIGO CODE	DENOMINACION	NAME	FI-80 W							NOTAS
1	Z263002000	VAINA INDICADOR COMPLETA	COMPLETE INDICATOR SHELL	1							
	Q307048000	JUNTA TORICA Ø16,18xØ9,12xØ3,53	O-RING 18x12.5x1.5	1							
2	Q162070000	TUERCA EXAGONAL M-12	HEXAGONAL NUT M12	1							
3	Z101211000	APOYO INTERRUPTOR	SWITCH SUPPORT	1							
4	Z203010000	AMARRE INTERRUPTOR MAGNET.	MAGNETIC SWITCH FASTENER	1							
	Q232040000	ARANDELA A-6	WASHER A-6	1							
	Q162040000	TUERCA EXAGONAL M-6	HEXAGONAL NUT M-6	1							
5	Z203009000	INTERRUPTOR MAGNETICO	MAGNETIC SWITCH	1							
6	Z273005000	CONMUTADOR DE FUNCIONES	SWITCH FUNCTIONS	1							
	Q041324000	TORNILLO AVELLANADO M-4x25	HEXAGONAL COUNTERSUNK M4	2							
	Q221341000	REMACHE EXAGONAL M4	HEXAGONAL RIVET M4	2							
7	Z712932000	SOPOR. CONMUTADOR CAPOTA	HOOD BRACKET SWITCH	1							
	Q419005000	REMACHE 4x8 ALMG3 / ALUMINIO	RIVET 4x8 ALMG3 / ALUMINIO	2							
8	Z748413000	EMBELLECEDOR ADHESIV. FI-80W	ADHESIVE TRIM FI-80W	1							
	Q152004000	TORNILLO APLAST. M5x13 A 304	FLAT HEADED BOLT M5x13	2							
9	Z743017000	BOTON DE MANDO 80	CONTROL BUTTON 80	1							
10	Z203079000	PILOTO AMBAR Ø 10	AMBER PILOT Ø 10	2							
11	Z728442000	EMBELLECEDOR FI W	TRIM FI-80W	1							
	Q152004000	TORNILLO APLAST. M5x13 A 304	FLAT HEADED BOLT M5x13	1							
12	Z273060000	TERMOMETRO W	W THERMOMETER	2							
13	Z712926000	PANEL FRONTAL W	FRONT PANEL W	1							ELIMINADO 29.01.2013
13	12048218	PANEL FRONTAL FI FAGOR COMP.	FRONT PANEL FI FAGOR COMP.	1							INTRODUCIDO 29.01.2013
14	Z651731000	CAPERUZA RESISTEN. CALDERIN	DRUM RESIST. CAP	1							
	Q163140000	TUERCA EXAGONAL M6 LATON	HEXAGONAL NUT M6 BRASS	2							
	Q012031000	TORNIL. EXAGONAL M5x10 A.304	HEXAGONAL BOLT M5X10 A.304	2							
15	Z241703000	RESISTENCIA CALDERIN W	DRUM RESISTOR W	1							
	Q221305000	TUERCA EX, AUTO. M4 ZINCADA	HEX NUT , AUTO. M4 ZINC-COAT	6							
	Q163140000	TUERCA EXAGONAL M6 LATON	HEXAGONAL NUT M6 BRASS	6							
	Q262040000	ARANDELA GROW. A6 A,304	WASHER GROW. A6 A.304	6							
16	Q307035000	JUNTA TORICA AN-36 282333	O-RING AN-36 282333	1							
17	Z743601000	RESISTENCIA TANQUE	TANK RESISTOR	1							

MOD.	LAVAVAJILLAS DE CAPOTA PASS THROUGH DISHWASHER	ZONA / ZONE	PARTE FUNCIONAL ELECTRICA ELECTRICS FUNCTIONAL PART	PLANO DIAGRAM	C-2664

ITEM	CODIGO CODE	DENOMINACION	NAME	FI-80 W							NOTAS
18	Z743602000	SOPORTE RESISTENCIA TANQUE	TANK RESISTOR SUPPORT	1							
	Q232040000	ARANDELA A,6	WASHER A,6	1							
	Q162040000	TUERCA EXAGONAL M6	HEXAGONAL NUT M6	1							
19	Z203013000	TORNILLO PRESOSTATO	PRESSURE SWITCH BOLT	1							
20	12024157	EMPALME PRESOSTATO	PRESSURE SWITCH CONNEX	1							
	Q307003000	JUNTA TOR.16,01x10,77x2,62	O-RING 16.01X10.77X2.62	3							
21	Z203011000	CAMARA PRESOSTATO	PRESSURE SWITCH	1							
22	3702400000	TUBO DE GOMA D8*4	BLACK RUBBER PIPE Ø 8*4	1							
	P102154000	BRIDA ELASTICA TUBO	ELASTIC PIPE FLANGE	2							
23	Z602923000	SOPORTE PRESOSTATO	PRESSURE SWITCH SUPPORT	1							
	Q082032000	TORNILLO ALOMADO BZ-3,5x9,5	CURVED SCREW BZ-3.5x9.5	1							
	Q162040000	TUERCA EXAGONAL M6	HEXAGONAL NUT M6	1							
	Q232040000	ARANDELA A6	WASHER A6	1							
24	Z713002000	PRESOSTATO SIMPLE	SIMPLE PRESSURE SWITCH	1							
25	N503017000	SOPORTE TERMOSTATO 1001713	THERMOSTAT SUPPORT 100171	2							
26	R213004000	TERMOSTATO REARME MANUAL	MANUAL RESET THERMOSTAT	1							
27	Z103066000	VENTILADOR 230V,50/60 HZ	FAN 230V,50/60 HZ	1							
28	Z713015000	PROTECCION VENTILADOR ABS	FAN PROTECTION	1							
	Q042022000	TORNILLO AVELLANADO M4x15	COUNTERSUNK BOLT M4x15	8							
	Q162020000	TUERCA EXAGONAL M4	HEXAGONAL NUT M4	12							
	Q242020000	ARANDELA ABANICO A-4 A304	FAN WASHER A-4 A304	8							
29	Z718446000	CHAPA W 85ºC	PLATE W 85ºC	1							ELIMINADO 31.10.2012
30	Z393005000	TERMOSTATO CALDERIN	WASH DRUM THERMOSTAT	1							
	Q152024000	TORNILLO AVELLANADO M4x8	COUNTERSUNK BOLT M4x8	2							
31	3715520000	CANALETA UNEX 60,30,77	PIPING UNEX 60.30.77	3							
	Q419005000	REMACHE 4x8 ALMG3 / ALUMINIO	RIVET 4X8 ALMG3 / ALUMINIUM	2							
	Q221342000	REMACHE EXAGONAL M5	HEXAGONAL RIVET M5	1							
	Q232040000	ARANDELA A6	WASHER A6	2							
	Q162040000	TUERCA EXAGONAL M6	HEXAGONAL NUT M6	2							
	Q152004000	TORNILL, APLASTADO M5x13 A304	FLAT HEADED BOLT M5x13 A304	1							
32	Z213014000	LIMITADOR TECASA P.	LIMITER TECASA P.	1							

MOD.	LAVAVAJILLAS DE CAPOTA PASS THROUGH DISHWASHER	ZONA / ZONE	PARTE FUNCIONAL ELECTRICA ELECTRICS FUNCTIONAL PART	PLANO DIAGRAM	C-2664

ITEM	CODIGO CODE	DENOMINACION	NAME	FI-80 W							NOTAS
33	Z203060000	AMARRE LIMITADOR TECASA	LIMITER FASTENING TECASA	1							
	Q221341000	REMACHE EXAGONAL M4	HEXAGONAL RIVET M4	2							
	Q152024000	TORNILLO AVELLANADO M4x8	COUNTERSUNK BOLT M4X8	2							
34	Z258412000	PROGRAMADOR 60Hz.T.stop	CYCLE PROGRAMMER 60Hz.T.st	1							
35	Z713037000	CAJA CUADRO ELECTRICO	SWITCHBOARD BOX	1							
36	Z203050000	CONTAC. SIRIUS 3R 230V.50-60	CONTACTOR SIRIUS 3R 230V50-	1							
37	Z743009000	CONTAC. SIRIUS 3R 230V.50-60	CONTACTOR SIRIUS 3R 230V50-	2							
38	Z683069000	BORNA 16	TERMINAL 16	2							
	R673010000	BORNA PASO AZUL 35 MM.	STEP BORN BLUE 35 MM.	1							
	Z683070000	BORNA A TIERRA WEIDMULLER	TERMINAL TO EARTH WEIDMULL	1							
	Z683068000	SEÑALIZ.DEK-6WEIDMULLER	SIGNS DEK-6WEIDMULLER	1							
	R263003000	BORNA PASO 35 MM.	STEP BORN 35 MM.	1							
39	R023013000	PRENSA ESTOPAS	STUFFING BOX	1							
40	Z683087000	CONTACTOR 3TF20 01-3AL2 230	CONTACTOR 3TF20 01-3AL2 2	1							
41	R343100000	TERMOSTATO CONDUCC. VAPOR	DRIVER STEAM THERMOSTAT	2							ELIMINADO 03.12.2012
41	12040858	TERMOSTATO 16A 85ºC 6MM 801v	THERMOSTAT16A 85ºC 6MM 80	1							INTRODUCIDO 03.12.2012
	R343039000	SOPORTE TERMOSTATO VAPOR	BRACKET VAPOR THERMOST.	1							
	Q419005000	REMACHE 4x8 ALMG3 / ALUMINIO	RIVET 4x8 ALMG3 / ALUMINIO	2							

MOD.	LAVAVAJILLAS DE CAPOTA PASS THROUGH DISHWASHER	ZONA / ZONE	VARIOS / MISCELLANEOUS	PLANO DIAGRAM	

ITEM	CODIGO CODE	DENOMINACION	NAME	FI-80 W							
	Z718435000	FOLLETO DE INSTRUCCIONES	INSTRUCTION LEAFLET	1							
	Z748407000	ESQUEMA TEORICO	INSTRUCTION LEAFLET	1							PLANO HC-17389
	Z743014000	PLANO DE MONTAJE FI-80	ASSEMBLY PLAN FI-80	1							PLANO HC-17726
	Z713036000	LEYENDA CAPOTA	HOOD LEGEND	1							PLANO HC-17400
	Z743015000	CABLEADO FI-80	FI-80 WIRING	1							
	Z723003000	INSTALAC. ELECTRICA BASE 120	ELEC. INSTALATION BASE 120	1							
	Z728444000	CABLEADO TERMOSTOP Y DOSIF.	TERMOSTOP AND DISP WIRING	1							
	Z723013000	CABLE TENSOR	TENSIONER WIRING	1							INTRODUCIDO 28.01.2013

FI - 80 W

208 - 220 - 240 V. 3Ph

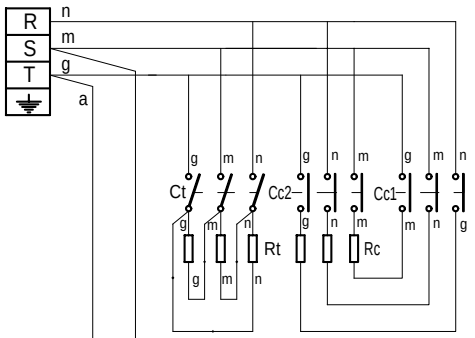

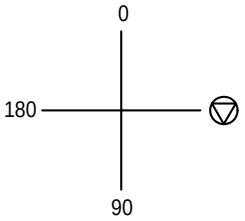

	1 1a	2 2a	3 – 4 3a	4a	5 5a	6 6a
0						
⏚	X	X				
90	X	X	X		X	X
180	X	X		X	X	X

IG

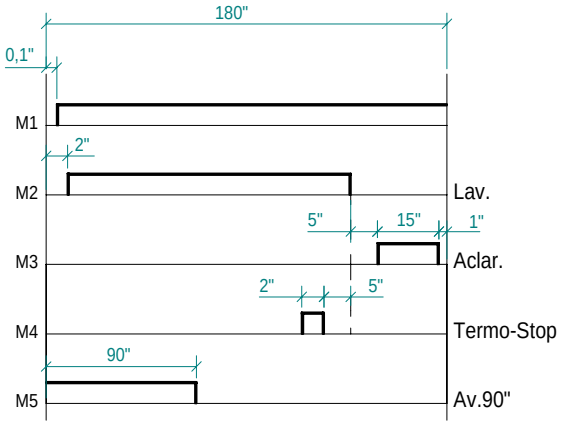

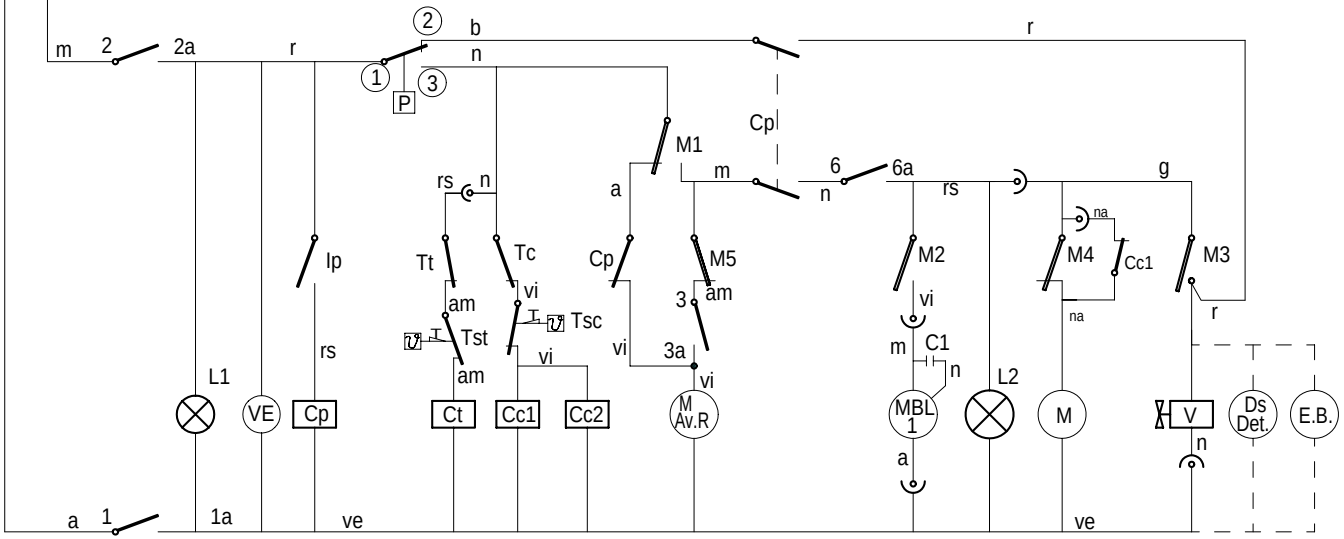

Colours code-Code de couleurs-Codigo de colores:
r = red-rouge-rojo
m = brown-marron-marron
g = grey-gris-gris
n = black-noir-negro
a = blue-bleu-azul
b = white-blanc-blanco
vi = violet-violette -violeta
am = yellow-jaune-amarillo
na = orange-orange-naranja
rs = rose-pink-rosa
ve = green-vert-verde
am/ve = yellow green-jaune vert-amar./verde

I_G= General switch	Interrupteur general	Interruptor General
L1 = On lamp	Témoin de marche	Lampara de marcha
Ip = Door micro	Micro de porte	Micro de puerta
Cp = Door contactor	Contacteur de porte	Contactor puerta
P = Pressure switch	Presostat	Presostato
Tc = Boiler thermostat	Thermostat du surchauffeur	Termostato calderin
Tt = Tank thermostat	Thermostat de cuve	Termostato tanque
Tsc = Boiler limiter thermostat	Thermostat limitateur du surchauffeur	Termostato limitador de calderin
Cc1, Cc2 = Boiler contactor	Contacteur du surchauffeur	Contactor calderin
Ct = Tank contactor	Contacteur de cuve	Contactor tanque
Rc = Boiler heating element	Resistance du surchauffeur	Resistencia calderin
Rt = Tank heating element	Resistance de cuve	Resistencia tanque

M.Av.R = Motor programmer rapid advance	Moteur du programmateur avance rapide	Motor programador avance rápido
M = Motor programmer	Moteur du programmateur	Motor programador
M1 = Micro programmer on	Micro du programm. de marche	Micro programador marcha
M2 = Micro programmer wash	Micro du programm. de lavage	Micro programador lavado
M3 = Micro programmer rinse	Micro du programm. de rinçage	Micro programador aclarado
M4 = Micro programmer Termo-stop	Micro du programador Termo-stop	Micro programador Termo-stop
M5 = Micro programmer advance 90"	Micro du programm. avance 90"	Micro programador avance 90"
L2 = Cycle light	Témoin de cycle	Lámpara de ciclo
MBL1= Motor pump wash	Motobopompe de lavage	Motobomba lavado
C1= Motor pump condenser	Condensateur de la motopompe	Condensador de motobomba
V = Filling and rinsing valve	Valve de remplisage et de vidange	Válvula de llenado y aclarado
Ds Det = Detergent dispenser (Optional)	Doseur de detergent (Option)	Dosificador de detergente (opcional)
EB = Electric pressure pump (Optional)	Electropompe de pression (Option)	Electrobomba de presión (Opcional)
Tst = Tank limiter thermostat	Thermostat limitateur de cuve	Termostato limitador de tanque

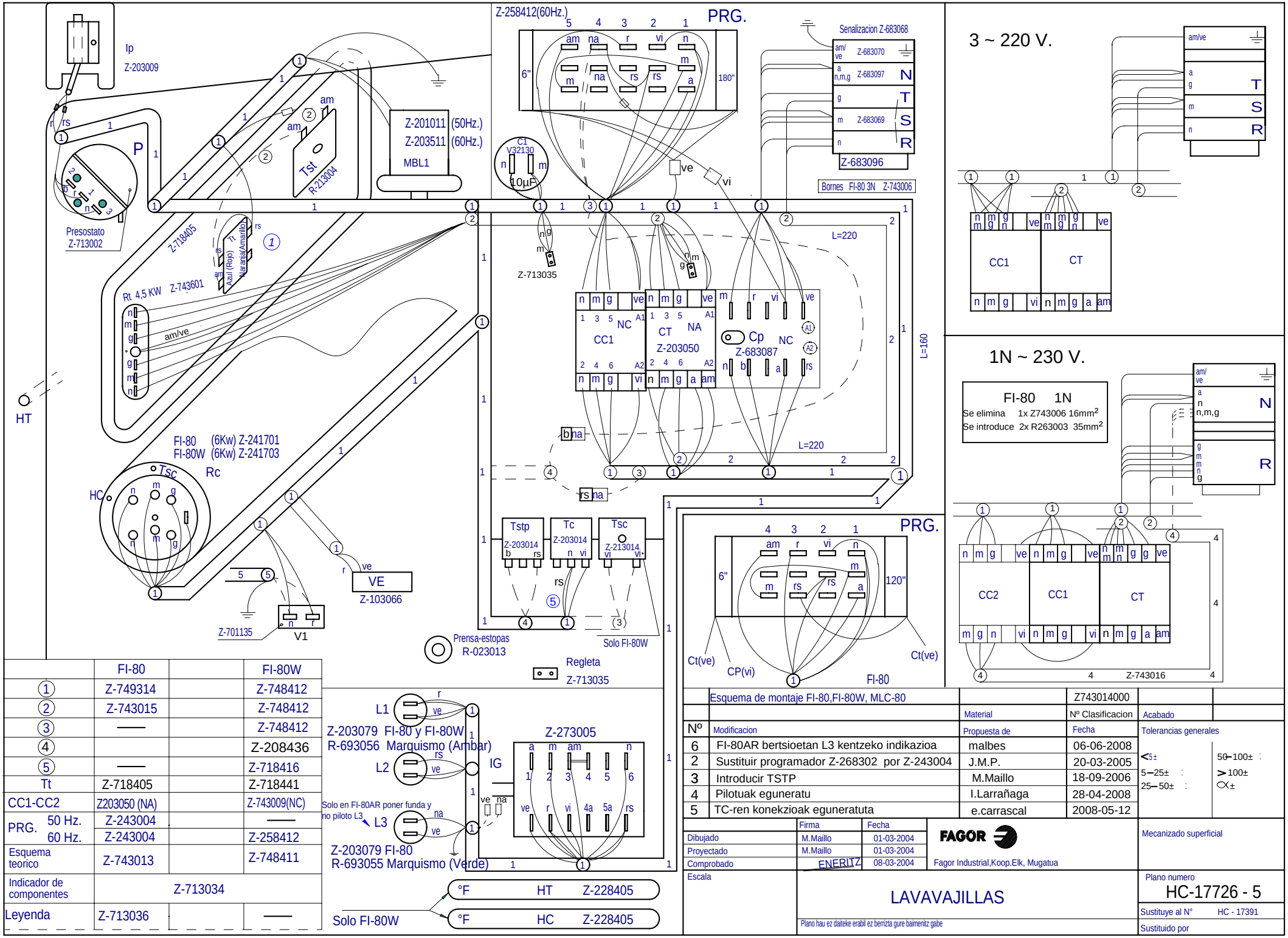

	FI-80		FI-80W
①	Z-749314		Z-748412
②	Z-743015		Z-748412
③	——		Z-748412
④			Z-208436
⑤	——		Z-718416
Tt	Z-718405		Z-718441
CC1-CC2	Z203050 (NA)		Z-743009(NC)
PRG. 50 Hz.	Z-243004		——
PRG. 60 Hz.	Z-243004		Z-258412
Esquema teorico	Z-743013		Z-748411
Indicador de componentes	Z-713034		
Leyenda	Z-713036		——

Esquema de montaje FI-80,FI-80W, MLC-80

Z743014000

Nº	Modificacion	Propuesta de	Fecha
6	FI-80AR bertsioetan L3 kentzeko indikazioa	malbes	06-06-2008
2	Sustituir programador Z-268302 por Z-243004	J.M.P.	20-03-2005
3	Introducir TSTP	M.Maillo	18-09-2006
4	Pilotuak eguneratu	I.Larrañaga	28-04-2008
5	TC-ren konekzioak eguneratuta	e.carrascal	2008-05-12

Material | Nº Clasificacion | Acabado

Tolerancias generales
<5± | 5–25± | 25–50± | 50–100± | >100± | ∝±

	Firma	Fecha
Dibujado	M.Maillo	01-03-2004
Proyectado	M.Maillo	01-03-2004
Comprobado	ENERITZ	08-03-2004
Escala		

FAGOR
Fagor Industrial,Koop.Elk, Mugatua

Mecanizado superficial

LAVAVAJILLAS

Plano hau ez daiteke erabili ez berrizta gure baimenitz gabe

Plano numero HC-17726 - 5

Sustituye al Nº HC - 17391

Sustituido por

LEYENDA CAPOTA

	ESPAÑOL	FRANÇAIS	ENGLISH	DEUTSCH	ITALIANO
ⒶⒷⓒ	Puntos de conexion con R	Points de conexion R	Conecction point with R	Anschlußpunkte mit R	Punti di collegamento con R
BD	Bomba desagüe	Pompe de vidange	Drain pump	Abflußpumpe	Pompa scarico
C 1/2/3	Condensador	Condensateur	Condenser	Kondensator	Condensatore
CMB	Contactor bomba lavado	Contacteur pompe lavage	Wash pump contactor	Kontaktschütz Waschpumpe	Contattore pompa lavaggio
Cc 1/2	Contactor calentamiento calderin	Contacteur chauf. surchauffeur	Boiler heating contactor	Kontaktschütz Boilerheizung	Contattore riscaldamento boiler
Ct	Contactor calentamiento tanque	Contacteur chaufage cuve	Tank heating contactor	Kontaktschütz Heizung Tank	Contattore riscaldamento serbatoio
CP	Rele puerta	Relais porte	Door relay	Türrelais	Rele porta
Ds.Det.	Dosificador detergente	Dosseur de detergent	Detergent doser	Dosierer Spülmittel	Dosatore detersivo
E.B	Electrobomba de presion	Electropompe de pression	Electric pressure pump	Elektro-Drucksteigungspumpe	Electropompa pressione
IG	Interruptor general	Interrupteur general	Main switch	Hauptschalter	Interruttore generale
IP	Micro puerta	Micro porte	Door microswitch	Mikroschalter Tür	Micro porta
L1	Piloto de encendido	Voyant funcionement	Operation light	Betriebsanzeigelampe	Spia accensione
L2	Piloto marcha	Voyant demarrage	Start light	Startanzeigelampe	Spia avvio
L3	Piloto maquina preparada	Voyant machine prêt	Light machine ready	Betriebsbereitschaftsanzeigelampe	Pilota macchina preparata
MBL 1/2	Bomba lavado	Pompe lavage	Wash pump	Waschpumpe	Pompa lavaggio
M	Motor programador	Moteur du programmateur	Motor programmer	Motor Programmiervorrichtung	Motore programmatore
M Av. R	Motor program. avance rapido	Moteur du progr.avance rapide	Motor program. rapid advance	Motor Programmiervorrich. schneller Vorlauf	Motore programmatore avanzamento rapido
M1	Micro programador marcha	Micro du programm. de marche	Micro programmer on	Motor Programmiervorrich. Betrieb	Micro programma. di funzionamento
M2	Micro programador lavado	Micro du programm. de lavage	Micro programmer wash	Motor Programmiervorrich. Waschen	Micro programmatore di lavaggio
M3	Micro programador aclarado	Micro du programm. de rinçage	Micro programmer on	Motor Programmiervorrich. Spülen	Micro programmatore di risciacquo
M4	Micro programador Termo-stop	Micro du programm. Termo-stop	Micro programmer Termo-stop	Motor Programmiervorrich. Thermo-Stop	Micro programmatore Termo-stop
M5	Micro programador avance	Micro du programm. avance	Micro programmer advance	Motor Programmiervorrich. Vorlauf	Micro programmatore avanzamento
M6	Micro programador avance	Micro du programm. avance	Micro programmer advance	Motor Programmiervorrich. Vorlauf	Micro programmatore avanzamento
P, P1, P5	Presostato	Pressostat	Pressure switch	Druckwächter	Pressostato
P2, P3, P4	Presostato limitador	Pressostat de securité	Hi-limit pressure switch	Begrenzer Druckwächter	Pressostato limitatore
R	Rele de Generador de A.C.	Relais du Generateur	Generator rele	Relais Generator	Rele Generatore
ⓇⓃ	Toma de alimentac. Generador A.C.	Alimentation generateur	Water heater feeding	Stromversorgungsanschluß Gener.	Alimentazione generatore
RC	Resistencia calderin	Resistance surchauffeur	Boiler heating element	Heizwiderstand Boiler	Resistenza boiler
RT	Resistencia tanque	Resistance cuve	Tank heater	Heizwiderstand Tank	Resistenza serbatoio
Tt	Termostato tanque	Thermostat de cuve	Tank thermostat	Thermostat Tank	Termostato serbatoio
TC	Termostato calderin	Thermostat surchauffeur	Boiler thermostat	Thermostat kessel	Termostato boiler
Tst	Limitador tanque	Limitateur de cuve	Tank limiter	Begrenzer Tank	Limitatore serbatoio
TSC	Limitador calderin	Limiteur surchauffeur	Boiler Hi-limit	Begrenzer Boiler	Limitatore boiler
TSTP	Termostato termo-stop	Thermostat Termo-stop	Termo-stop Thermostat	Thermostat Termo-stop	Termostato Termo-stop
V	Electrovalvula llenado y aclarado	Electrovan. remplissage rinçage	Fill and rinse valve	Elektroventil Füllen und Spülen	Elettroval. riempimento e risciacquo
VE	Ventilador cuadro electrico	Ventilateur tableau electrique	Switchboard fan	Schalttafelventilator	Ventilatore quadro elettrico
COLOR	COLORES	COULEURS	COLOUR	FARBEN	COLORE
a =	Azul	Bleu	Blue	Blau	Blu
am =	Amarillo	Jaune	Yellow	Gelb	Giallo
am/ve =	Amarillo/verde	Jaune / vert	Yellow / green	Gelb/grün	Giallo/verde
b =	Blanco	Blanc	White	Weiß	Bianco
g =	Gris	Gris	Grey	Grau	Grigio
m =	Marrón	Marron	Brown	Braun	Marrone
n =	Negro	Noir	Black	Schwarz	Nero
na =	Naranja	Orange	Orange	Orange	Arancio
r =	Rojo	Rouge	Red	Rot	Rosso
rs =	Rosa	Rose	Pink	Rosa	Roseo
ve =	Verde	Vert	Green	Grün	Verde
vi =	Violeta	Violet	Purple	Violett	Viola

Z-713036