ARMARIO DE REFRIGERACIÓN PARA PESCADO O PASTELERÍA CONCEPT / CABINET COOLING CONCEPT FOR FISH OR PASTRY

CAP-701 19029779

CAPP-701 19029777

FAGOR

Versión 2014-10

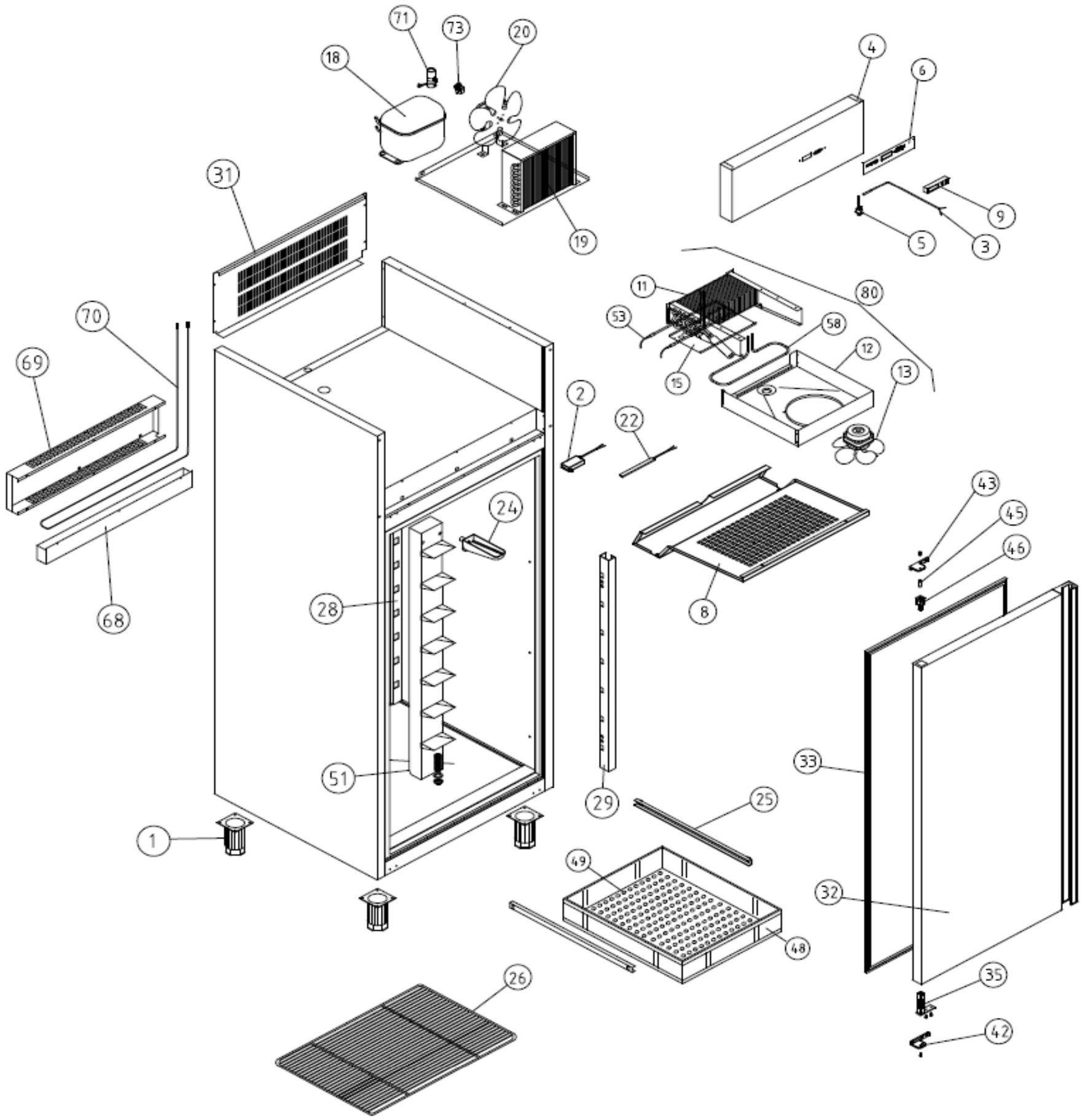

ARMARIO DE REFRIGERACIÓN PARA PESCADO CONCEPT / CABINET COOLING CONCEPT FOR FISH

CAP-701 19029779

FAGOR

Versión 2014-10

| Nº | CODE CÓDIGO | RECOM. | DESCRIPCIÓN | DESCRIPTION | CAP-701 |
|---|---|---|---|---|---|
| 1 | 12033566 | | PATA REGULABLE ARM.GASTRO | GASTRO CABINET ADJUSTABLE LEG | 4 |
| 2 | 12103609 | | FUENT APV-16-24 115-230 50/60Hz 24V 16W | APV-16-24 115-230 50/60Hz 24V 16W SOURCE | 1 |
| 3 | 12045530 | | SONDA NTC 2,5 MTS | THERMOSTAT PROBE | 2 |
| 4 | 12116403 | | CABEZA AP-APP 700 CONCEPT | HEAD AP-APP 700 CONCEPT | 1 |
| 5 | 12101812 | | MICRO. CONMUT. HH3141CA | MICRO. CONMUT. HH3141CA | 1 |
| 6 | 12104752 | | ADHESIVO G. CONCEPT PWC | PWC CONCEPT RANGE STICKER | 1 |
| 8 | 12116808 | | TAPA EVAPORADOR ARM. AP/APP CONCEPT | EVAPORATOR COVER ARM. AP/APP CONCEPT | 1 |
| 9 | 12040693 | | TERMOSTATO POWER COMPAC CONG. | FREEZER POWER COMPACT THERMOSTAT | 1 |
| 11 | 12046898 | | BAT.6T4R 300A 6S.PINT | BAT.6T4R 300A 6S.PINT | 1 |
| 12 | 12070030 | | SUJ.VENT.AFP-700,800 COMPACTO | SUJ.VENT.AFP-700,800 COMPACTO | 1 |
| 13 | 12034545 | | VENTIL.EVAPOR.5W S/ARO S/PATAS | VENTIL.EVAPOR.5W S/ARO S/PATAS | 1 |
| 15 | 12044961 | | CUBRER.EVAP.FC61B ARM.COMPACTO | CUBRER.EVAP.FC61B ARM.COMPACTO | 1 |
| 18 | 12046686 | | COMP.NEK6210Z EMB | COMP.NEK6210Z EMB | 1 |
| 19 | 12032340 | | CONDENSADOR 9x3 FAGC0021 | CONDENSADOR 9x3 FAGC0021 | 1 |
| 20 | 12033477 | | VENTILADOR 10W PATA PALA 220V | 10W 220V MOTOR WITH LEG AND FAN | 1 |
| 22 | 12117149 | | TIRA LED T3-270-3014-868.16-CW24V DC 2mt | T3-270-3014-868.16-CW24V DC 2mt LED STRIP | 1 |
| 24 | 12037314 | | CANALIZ AGUA 150 NEGRO CONG | FREEZER BLACK 150 WATER DRAINAGE | 1 |
| 25 | 12036689 | | GUIA AP Y APP EN L 485 MM | GUIDE AP AND APP L 485 mm | 14 |
| 28 | 12033613 | | CREM.RESP.AP,APP-701 GAMA 2006 | CREM.RESP.AP,APP-701 GAMA 2006 | 2 |
| 29 | 12033464 | | CREM.COST.AP,APP-701 GAMA 2006 | CREM.COST.AP,APP-701 GAMA 2006 | 2 |
| 31 | 12069846 | | RESP.REJ.MOTOR AP,APP 2006 | RESP.REJ.MOTOR AP,APP 2006 | 1 |
| 32 | 12083614 | | PUERT APP/AP IZQ.CONCEPT | CONCEPT LEFT OPEN APP/AP DOOR | 1 |
| 33 | 12034273 | | BURLETE AP-APP | AP-APP GASKET DOOR | 1 |
| 35 | 12038130 | | BIS.TRS1D DOBL MUELLE DV-2608 | DOUBLE SPRING HINGE TRS1D DV-2608 | 1 |
| 42 | 12036986 | | SOP.BISAG.INF.IZD. | LEFT LOW HINGE SUPPORT | 1 |
| 43 | 12041474 | | SOPORTE SUPERIOR BISAGRA IZQUIERDO | LEFT TOP HINGE SUPPORT | 1 |
| 45 | 12038076 | | EJE SUP. PUERTAS 30x10 VARILLA INOX.INT. M-6 | SUP HUB. 30x10 ROD DOORS INOX.INT. M-6 | 1 |
| 46 | 12037723 | | CAJA ALOJAMIENTO MUELLE GRIS | GREY SPRING HOUSING BOX | 1 |
| 48 | 12033925 | | CUBETA ASA GRIS 600X400X120 | ASA GRAY BUCKET 600X400X120 | 7 |
| 49 | 12033305 | | FONDO PERF. CUB. 600x400 | BACKGROUND PERF. CUB. 600x400 | 7 |
| 51 | 12083557 | | CANALIZADOR AP-701 | CHANNELER AP-701 | 1 |
| 53 | 12034637 | | RESIST.R17 350W CABLE1MT. | RESIST.R17 350W CABLE1MT. | 1 |
| 58 | 12036313 | | RESIST.BANDEJA 700-20W | RESIST.BANDEJA 700-20W | 1 |
| 68 | 12034715 | | BAND.EVAP.AUT.AFP-GN | BAND.EVAP.AUT.AFP-GN | 1 |
| 69 | 12069844 | | TAP.BAND.EV.AUT.AP,APP701 | TAP.BAND.EV.AUT.AP,APP701 | 1 |
| 70 | 12038150 | | RESIST.EVAP.AUT.80W 3MT | RESIST.EVAP.AUT.80W 3MT | 1 |
| 71 | 12040120 | | CONDENSADOR COMP. NEK 6210Z | CONDENSADOR COMP. NEK 6210Z | 1 |
| 73 | 12036939 | | RELE ARRAN. COMP. NEK 6210Z | RELE ARRAN. COMP. NEK 6210Z | 1 |
| 80 | 12116747 | | UND. EVAP. AP-701 | AP-701 EVAPORATION UNIT | 1 |

ARMARIO DE REFRIGERACIÓN PARA PASTELERÍA CONCEPT / CABINET COOLING CONCEPT FOR PASTRY

CAPP-701 19029777

FAGOR

Versión 2014-10

| Nº | CODE CÓDIGO | RECOM. | DESCRIPCIÓN | DESCRIPTION | CAPP-701 |
|---|---|---|---|---|---|
| 1 | 12033566 | | PATA REGULABLE ARM.GASTRO | GASTRO CABINET ADJUSTABLE LEG | 4 |
| 2 | 12103609 | | FUENT APV-16-24 115-230 50/60Hz 24V 16W | APV-16-24 115-230 50/60Hz 24V 16W SOURCE | 1 |
| 3 | 12045530 | | SONDA NTC 2,5 MTS | THERMOSTAT PROBE | 1 |
| 4 | 12116403 | | CABEZA AP-APP 700 CONCEPT | HEAD AP-APP 700 CONCEPT | 1 |
| 5 | 12036888 | | MICROR.CONMUT.E3111CA | MICROR.CONMUT.E3111CA | 1 |
| 6 | 12104752 | | ADHESIVO G. CONCEPT PWC | PWC CONCEPT RANGE STICKER | 1 |
| 8 | 12116808 | | TAPA EVAPORADOR ARM. AP/APP CONCEPT | EVAPORATOR COVER ARM. AP/APP CONCEPT | 1 |
| 9 | 12067649 | | TERMOSTATO POWER COMPAC TROPICAL | TROPICAL POWER COMPACT THERMOSTAT | 1 |
| 11 | 12031794 | | BAT.6T4R300A4S PINT | BAT.6T4R300A4S PINT | 1 |
| 12 | 12070030 | | SUJ.VENT.AFP-700,800 COMPACTO | SUJ.VENT.AFP-700,800 COMPACTO | 1 |
| 13 | 12034545 | | VENTIL.EVAPOR.5W S/ARO S/PATAS | VENTIL.EVAPOR.5W S/ARO S/PATAS | 1 |
| 15 | 12044961 | | CUBRER.EVAP.FC61B ARM.COMPACTO | CUBRER.EVAP.FC61B ARM.COMPACTO | 1 |
| 18 | 12046686 | | COMP.NEK6210Z EMB | COMP.NEK6210Z EMB | 1 |
| 19 | 12032340 | | CONDENSADOR 9x3 FAGC0021 | CONDENSADOR 9x3 FAGC0021 | 1 |
| 20 | 12033477 | | VENTILADOR 10W PATA PALA 220V | 10W 220V MOTOR WITH LEG AND FAN | 1 |
| 22 | 12117149 | | TIRA LED T3-270-3014-868.16-CW24V DC 2mt | T3-270-3014-868.16-CW24V DC 2mt LED STRIP | 1 |
| 24 | 12037375 | | CANALIZADOR AGUA 150 GRIS REFRIGERACION | REFRIGERATION GREY 150 WATER DRAINAGE | 1 |
| 25 | 12036689 | | GUIA AP Y APP EN L 485 MM | GUIDE AP AND APP L 485 mm | 6 |
| 26 | 12034886 | | PARRILLA PASTEL.600X400 EPOXI | PARRILLA PASTEL.600X400 EPOXI | 3 |
| 28 | 12035877 | | CREMALL.RESP.PASTELERÍA APP | CREMALL.RESP.PASTELERÍA APP | 2 |
| 29 | 12036135 | | CREMALL.COST.PASTELERÍA APP | CREMALL.COST.PASTELERÍA APP | 2 |
| 31 | 12069846 | | RESP.REJ.MOTOR AP,APP 2006 | RESP.REJ.MOTOR AP,APP 2006 | 1 |
| 32 | 12083614 | | PUERT APP/AP IZQ.CONCEPT | CONCEPT LEFT OPEN APP/AP DOOR | 1 |
| 33 | 12034273 | | BURLETE AP-APP | AP-APP GASKET DOOR | 1 |
| 35 | 12038130 | | BIS.TRS1D DOBL MUELLE DV-2608 | DOUBLE SPRING HINGE TRS1D DV-2608 | 1 |
| 42 | 12036986 | | SOP.BISAG.INF.IZD. | LEFT LOW HINGE SUPPORT | 1 |
| 43 | 12041474 | | SOPORTE SUPERIOR BISAGRA IZQUIERDO | LEFT TOP HINGE SUPPORT | 1 |
| 45 | 12038076 | | EJE SUP. PUERTAS 30x10 VARILLA INOX.INT. M-6 | SUP HUB. 30x10 ROD DOORS INOX.INT. M-6 | 1 |
| 46 | 12037723 | | CAJA ALOJAMIENTO MUELLE GRIS | GREY SPRING HOUSING BOX | 1 |
| 68 | 12034715 | | BAND.EVAP.AUT.AFP-GN | BAND.EVAP.AUT.AFP-GN | 1 |
| 69 | 12069844 | | TAP.BAND.EV.AUT.AP,APP701 | TAP.BAND.EV.AUT.AP,APP701 | 1 |
| 70 | 12038150 | | RESIST.EVAP.AUT.80W 3MT | RESIST.EVAP.AUT.80W 3MT | 1 |
| 71 | 12040120 | | CONDENSADOR COMP. NEK 6210Z | CONDENSADOR COMP. NEK 6210Z | 1 |
| 73 | 12036939 | | RELE ARRAN. COMP. NEK 6210Z | RELE ARRAN. COMP. NEK 6210Z | 1 |
| 80 | 12116301 | | UND.EV. AFP-700,800,APP | AFP-700,800 EVAPORATION UNIT | 1 |

Notes: