Mod./Type: **_70/... - _90/... FRGS...**

SIMPLE

cod./num. 2531737.00

data/date: 19/09/2014

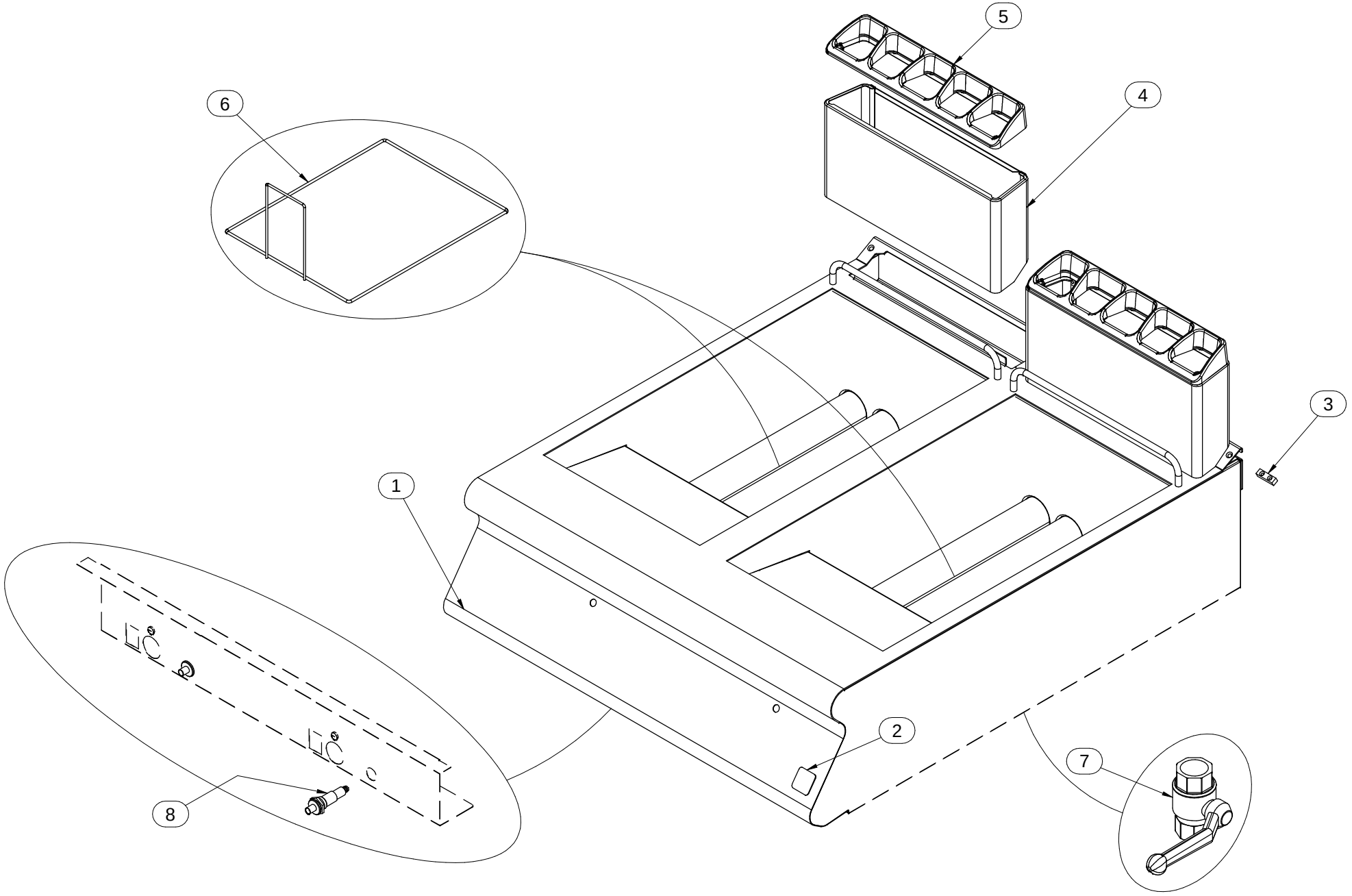

Mod./Type: **_70/... FRGS... - _90/... FRGS...**

SIMPLE

cod./num. 2531739.00

data/date: 23/07/2014

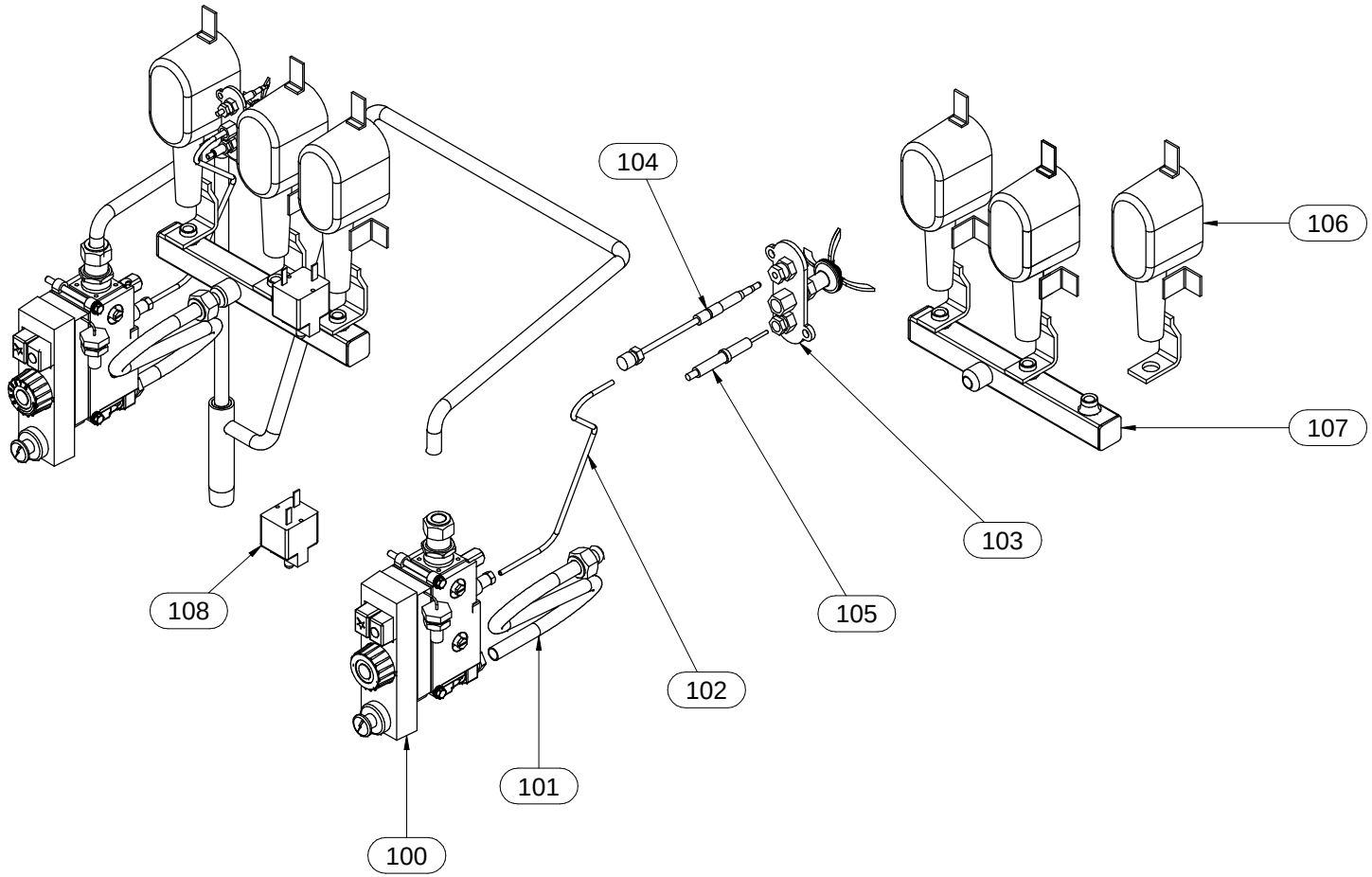

Mod./Type: **EM70 - EM90 .../40 ... - .../80 ... - .../120 ...**

EM90/160 ... VANO / CABINET

cod./num. 2531578.00

data/date: 05/06/2014

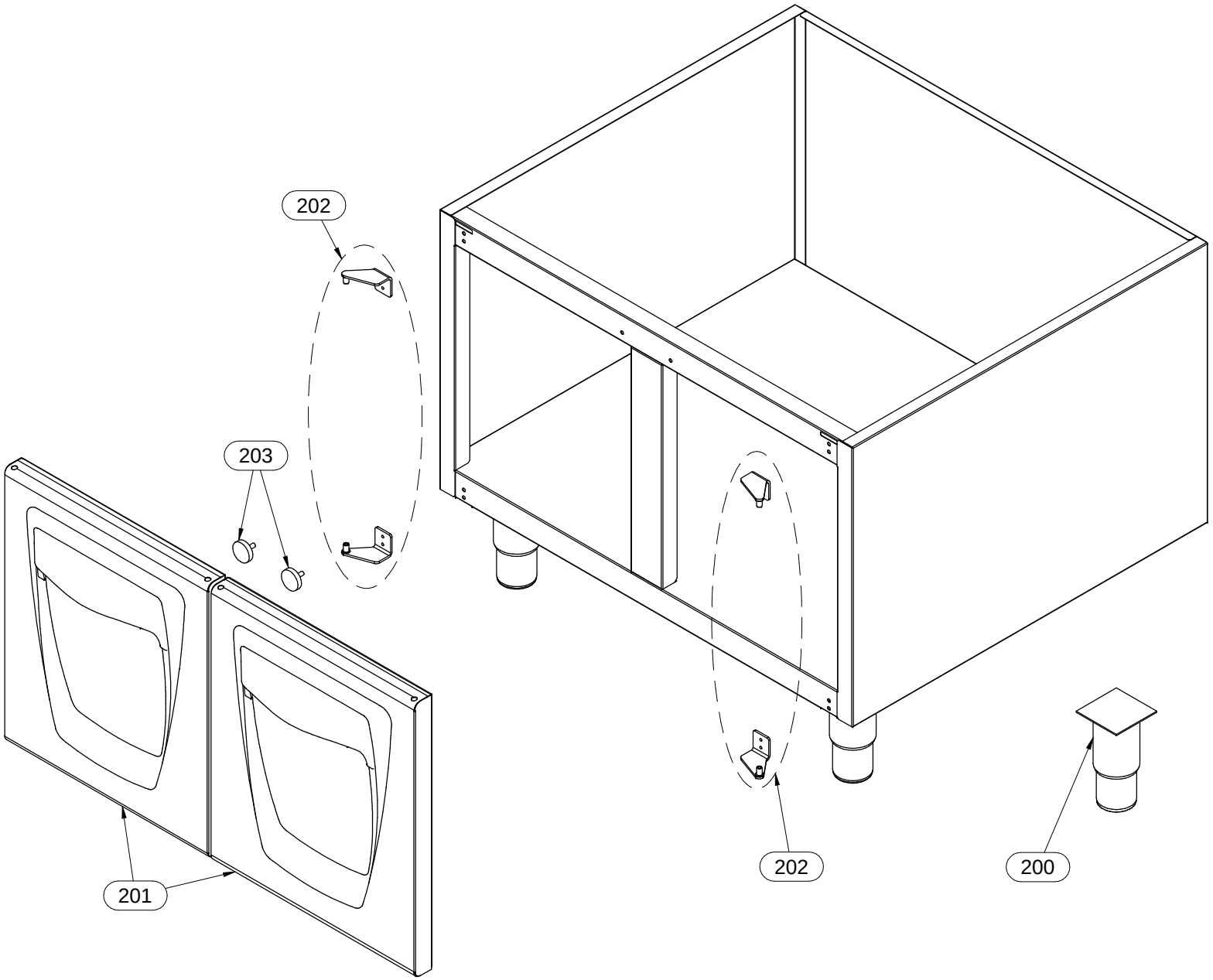

Mod.:	_70/… - _90/... FRGS… SIMPLE			cod. / num. 2531738.00 data / date 19/09/2014 rif. / ref. 2531737.00		EM70/40 FRGS13	EM70/80 FRGS13	EM90/40 FRGS13	EM90/80 FRGS13	EM90/40 FRGS20	EM90/80 FRGS20	NOTE	
POS.	DESCRIZIONE	DESCRIPTION	DENOMINATION	BENENNUNG	COD.	Q. ty							
1	CRUSCOTTO	CONTROL PANEL	BANDEAU	BEDIENBLENDE	6111183.00	1		1		1			
					6111184.00		1		1		1		
2	MARCHIO	BRAND NAME	MARQUE	MARKENZEICHEN	982.021.00	1	1	1	1	1	1	**FROM: 15.12.2011**	**TO: 31.01.2014**
					982.023.00	1	1	1	1	1	1	**FROM: 01.02.2014**	**TO:...**
3	PIASTRINA GIUNZIONE	FIXING PLATE	PLAQUETTE FIXAGE	BEFESTIGUNGSPLATTE	941.130.00	1	1	1	1	1	1		
4	CAMINO	CHIMNEY	CHEMINÉE	KAMIN	256.309.00	1	2	1	2	1	2		
5	GRIGLIA CAMINO	FLUE GRIDDLE	GRILLE POUR CHEMINÉE	KAMINROST	982.014.00	1	2	1	2	1	2		
6	FILTRO	FILTER	FILTER	FILTER	683.030.00	1	2	1	2				
					983.011.00					1	2		
7	VALVOLA	VALVE	SOUPAPE	VENTIL	678.007.00	1	2	1	2	1	2		
8	ACCENDITORE PIEZO	PIEZO LIGHTER	ALLUMEUR PIEZO	PIEZOZÜNDER	672.006.00	-	-	1	2	1	2	**FROM: 15.12.2011**	**TO: 30.10.2012**
					---------	-	-	-	-	-	-	**FROM: 01.11.2012**	**TO:...**
9													
10													
11													
12													
13													
14													
15													
16													
17													
18													
19													
20													
21													
22													
23													
24													
25													
26													
27													
28													
29													
30													
31													
32													
33													
34													
35													
36													

Mod.:	_70/... FRGS... SIMPLE			cod. / num. 2531740.00 data / date 25/06/2014 rif. / ref. 2531739.00		_70/40 FRGS13	_70/80 FRGS13	NOTE	
POS.	DESCRIZIONE	DESCRIPTION	DENOMINATION	BENENNUNG	COD.	Q. ty			
100	VALVOLA GAS	GAS VALVE	SOUPAPE GAZ	GAS VENTIL	256.324.00	1	2		
101	TUBO GAS	GAS PIPE	TUBE GAZ	GASROHR	--------	-	-	**FROM: 15.12.2011**	**TO: 30.10.2012**
					256.325.00	1	2	**FROM: 01.11.2012**	**TO:...**
102	TUBO GAS	GAS PIPE	TUBE GAZ	GASROHR	256.326.00	1	2	**FROM: 15.12.2011**	**TO: 30.10.2012**
					256.326.13	1	2	**FROM: 01.11.2012**	**TO:...**
103	GRUPPO PILOTA	PILOT GROUP	GROUPE VEILLEUSE	ZÜNDBRENNER GRUPPE	672.042.00	1	2		
104	TERMOCOPPIA	THERMOCOUPLE	THERMOCOUPLE	THERMOELEMENT	256.074.00	1	2		
105	CANDELA ACCENSIONE	IGNITION ELECTRODE	BOUGIE D'ALLUMAGE	KERZE SCHNELLBRENNER	256.017.00	1	2		
106	BRUCIATORE	BURNER	BRULEUR	BRENNER	672.071.00	3	6		
107	PORTAUGELLO	NOZZLE HOLDER	PORTE-INJECTEUR	SPRITZDÜSE-TRÄGER	675.085.00	1	2	**FROM: 15.12.2011**	**TO: 30.10.2012**
					975.058.00	1	2	**FROM: 01.11.2012**	**TO:...**
108	TERMOSTATO SICUREZZA	SAFETY THERMOSTAT	THERMOSTAT DE SECURITÉ	TEMPERATURBEGRENZER	661.034.00	1	2		
109									
110									
111									
112									
113									
114									
115									
116									
117									
118									
119									
120									
121									
122									
123									
124									
125									
126									
127									
128									
129									
130									
131									

Mod.:	EM70/... - EM90/… VANO / CABINET			cod. / num. 2531579.00 data / date 05/06/2014 rif. / ref. 2531578.00		EM70/40 ...	EM70/80 ...	EM70/120 ...	EM90/40 ...	EM90/80 ...	EM90/120 ...	EM90/160 ...	NOTE	
POS.	DESCRIZIONE	DESCRIPTION	DENOMINATION	BENENNUNG	COD.	Q. ty								
200	PIEDINO	FOOT	PIED	STELLFUSS	912.090.00	4	4	4	4	4	4	6	FROM: 15.12.2011	TO: 17.05.2013
					912.090.14	4	4	4	4	4	4	6	FROM: 18.05.2013	TO:...
201	PORTA	DOOR	PORTE	TÜR	256.215.00	1	2	3	1	2	3	4		
202	COPPIA CERNIERE	GASKETS PAIR	COUPLE CHARNIÈRES	SCHARNIERPAAR	256.216.00	1	2	3	1	2	3	4		
203	MAGNETE	MAGNET	MAGNÉTO	MAGNET	684.007.00	1	2	3	1	2	3	4	FROM: 15.12.2011	TO: 01.01.2014
					984.006.00	1	2	3	1	2	3	4	FROM: 02.01.2014	TO:...
204														
205														
206														
207														
208														
209														
210														
211														
212														
213														
214														
215														
216														
217														
218														
219														
220														
221														
222														
223														
224														
225														
226														
227														
228														
229														
230														
231														
232														
233														
234														