Mod./Type: **FORNI A CONVEZIONE E COMBINATI**
CONVECTION AND COMBINED OVENS

cod./num. 2531608.00

data/date: 18/04/2014

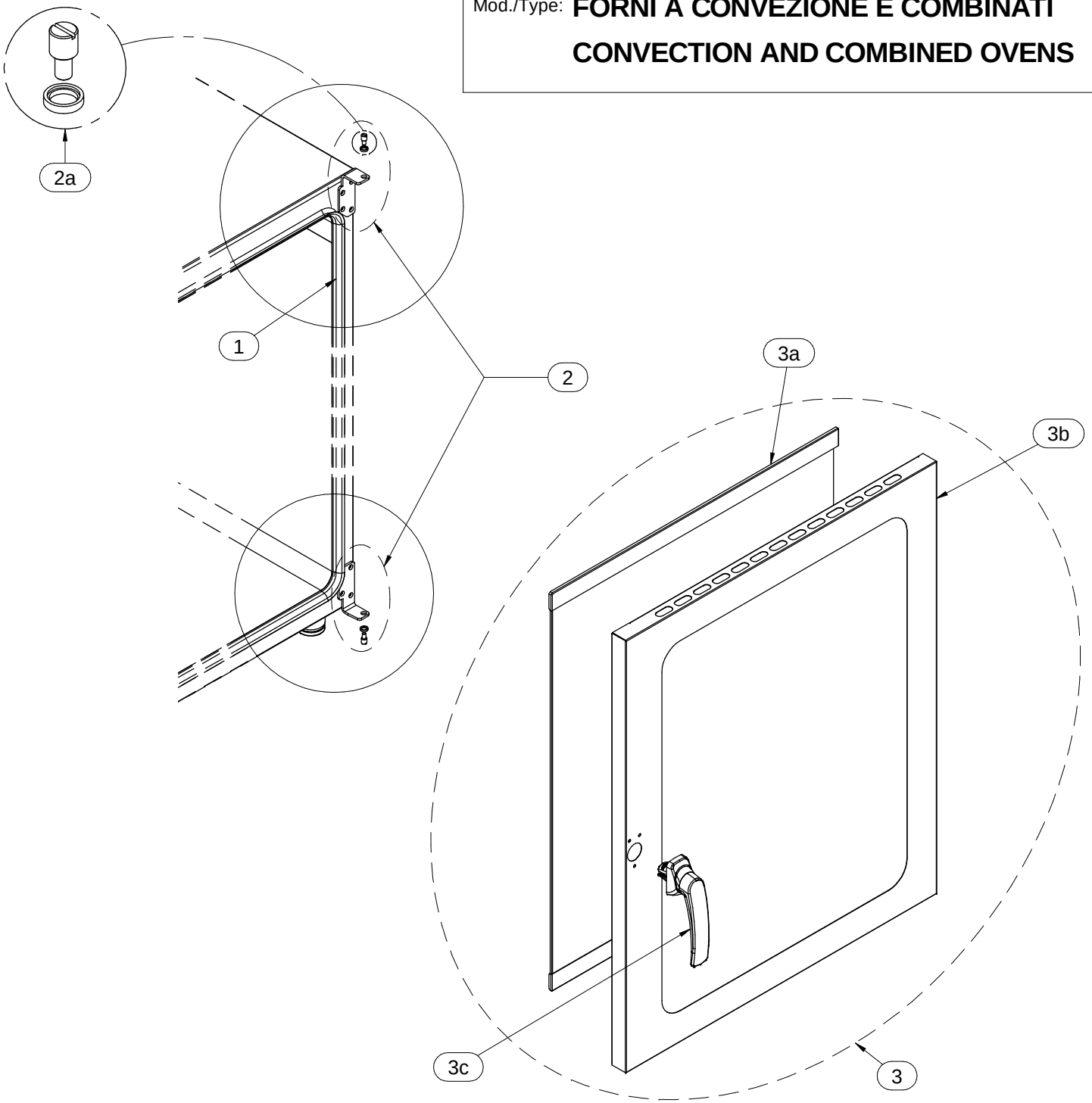

...FDE 051...
...FDE 101...
...FCE 051...
...FCE 101...
...FDG 051...
...FDG 101...
...FCG 051...
...FCG 101...

Mod.:	FORNI A CONVEZIONE E COMBINATI CONVECTION AND COMBINED OVENS			cod. / num. 2532295.00 data / date 15/12/2015 rif. / ref. 2532294.00		RICAMBI CONSIGLIATI - RECOMMENDED SPARE PARTS - PIÈCES DÉTACHÉES RECOMMANDÉES - EMPFOHLENEN ERSATZTEILE	...FDG... 051 P...	...FDG... 101 P...	NOTE
POS.	DESCRIZIONE	DESCRIPTION	DENOMINATION	BENENNUNG	COD.		Q. ty		
200	PORTAFUSIBILE	FUSE HOLDER	BOÎTE À FUSIBLES	ERUNGSHALTER	561.059.00		2	2	
201	FUSIBILE	FUSE	FUSIBLE	SCHMELZSICHERUNG	561.013.00		2	2	
202	CONDENSATORE	CONDENSER	CONDENSEUR	KONDENSATOR	464.016.00	*	1	2	
203	TERMOSTATO SICUREZZA	SAFETY THERMOSTAT	THERMOSTAT DE SECURITE	TEMPERATURBEGRENZER	561.046.00		1	1	
204	FILTRO ANTIDISTURBO	STORFILTER	FILTER ANTIBROUILLAGE	ANTIJAMMING FILTER	561.058.00		1	1	
205	MORSETTIERA	TERMINAL BOARD	BORNES	KLEMMENBRETT	M566050000		1	1	
206	RELÉ	RELAY	RELAY	RELAIS	461.083.00		1	1	
207	TIMER CICLO	CYCLE TIMER	MINUTERIE CYCLE	ZYKLUS-ZEITSCHALTER	561.047.00	*	1	1	
208	MOTORE VENTILATORE	MOTOR FAN	MOTEUR VENTILATEUR	MOTOR LUEFTERRAD	561.046.00		1	1	
209	MOTORE SCARICO	DRAIN ENGINE	MOTEUR ÉCOULEMENT	DER MOTOR ENTLADEN IST	561.066.00		1	1	
210	SCHEDA COMANDO	CONTROL CARD	PLAQUE DE COMMANDE	ANTRIEBSKARTE	561.069.00		1	1	
210a	TASTIERINO	KEYPAD	CLAVIER	TASTENFELD	561.061.00	*	1	1	
210b	CONTROLLORE	CONTROLLER	APPAREIL DE CONTROLE	CONTROLLER	561.060.00	*	1	1	
211	ENCODER	ENCODER	ENCODEUR	ENCODER	561.062.00	*	1	1	
212	SONDA TCJ	TCJ PROBE	SONDE TCJ	FÜHLER TCJ	561.044.00	*	1	1	
213	MANOPOLA	KNOB	BOUTON	DREHKNOPF	551.020.00		1	1	
214	CONNETTORE SONDA	PROBE CONNECTOR	CONNECTEUR SONDE	SONDENANSCHLUSS	561.065.00		1	1	
215	CRUSCOTTO	CONTROL PANEL	BANDEAU	BEDIENBLENDE	511.193.00		1		
					511.192.00			1	
216									
217									
218									
219									
220									
221									
222									
223									
224									
225									
226									
227									
228									
229									
230									
231									
232									
233									
234									

Mod./Type: **FORNI A CONVEZIONE E COMBINATI**
CONVECTION AND COMBINED OVENS

cod./num. 2532294.00

data/date: 14/12/2015

...FDG... 051 P...
...FDG... 101 P...

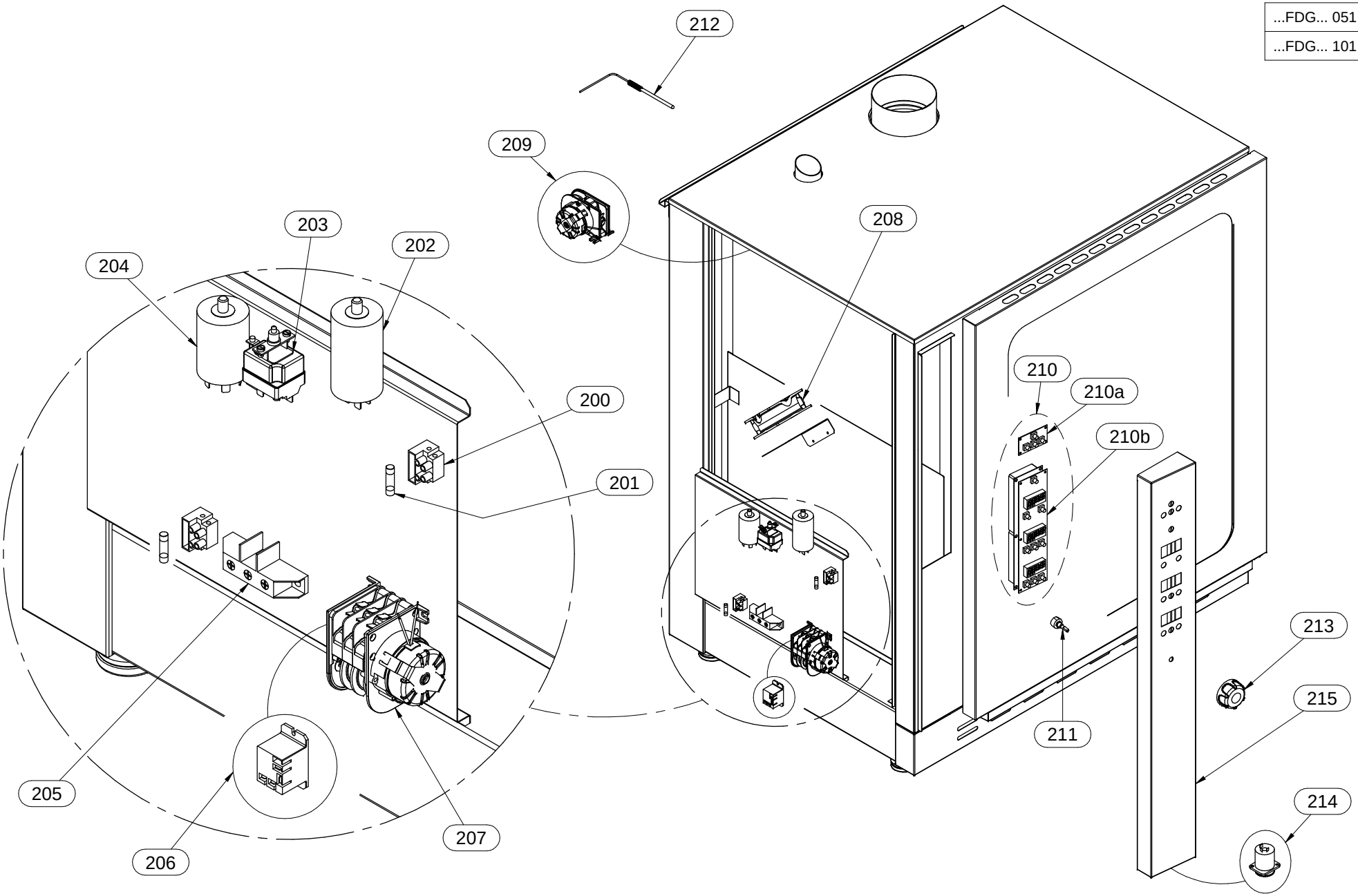

...FDG... 051...
...FDG... 101...
...FCG... 051...
...FCG... 101...

Mod./Type: **FORNI A CONVEZIONE E COMBINATI**
CONVECTION AND COMBINED OVENS

cod./num. 2531612.00

data/date: 23/04/2014

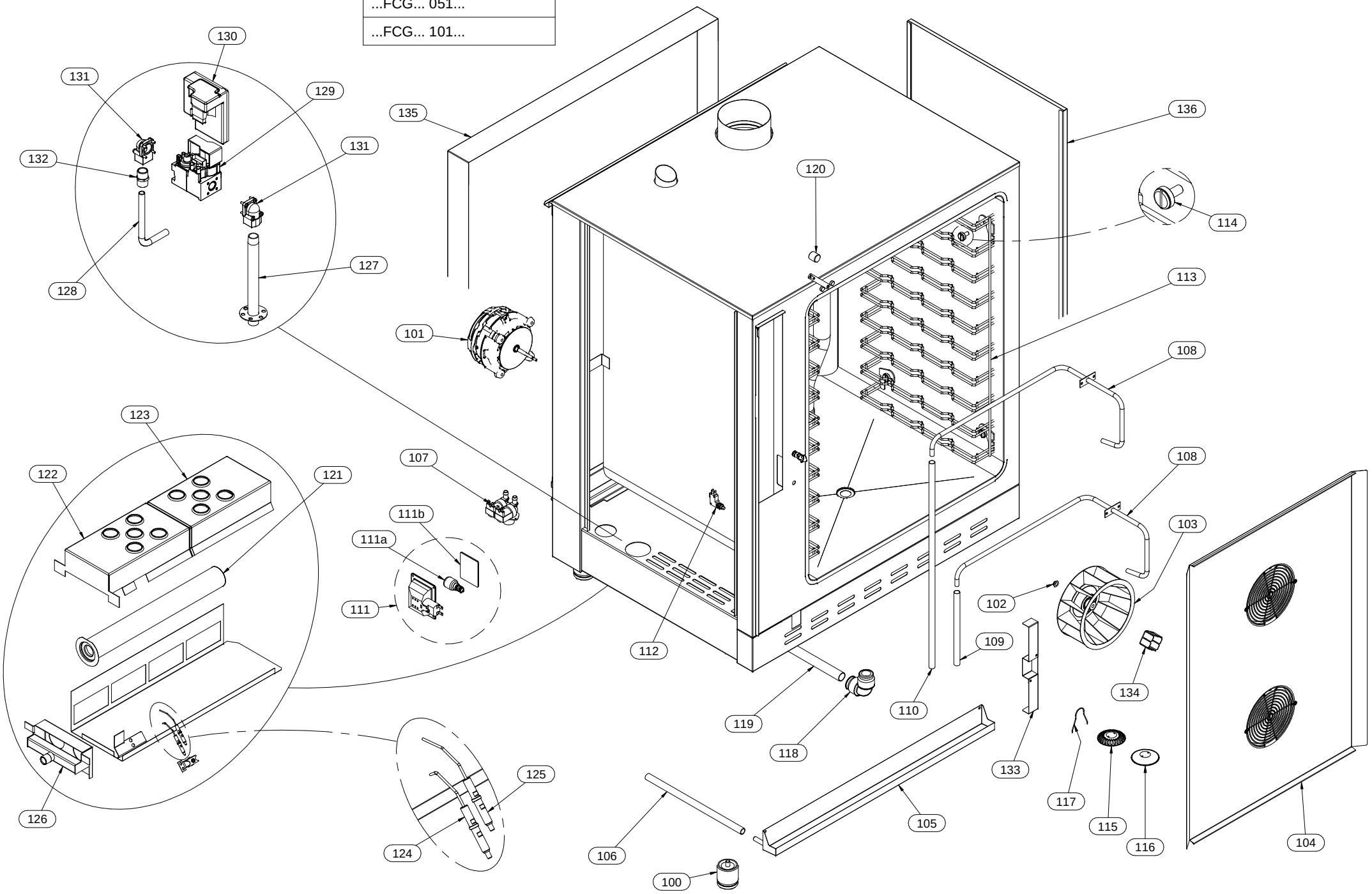

Mod.:	FORNI A CONVEZIONE E COMBINATI CONVECTION AND COMBINED OVENS			cod. / num. 2531613.00 data / date 22/04/2014 rif. / ref. 2531612.00		RICAMBI CONSIGLIATI - RECOMMENDED SPARE PARTS - PIÈCES DÉTACHÉES RECOMMANDÉES - EMPFOHLENEN ERSATZTEILE	...FDG... 051...	...FDG... 101...	...FCG... 051...	...FCG... 101...	NOTE	
POS.	DESCRIZIONE	DESCRIPTION	DENOMINATION	BENENNUNG	COD.		Q. ty					
100	PIEDINO	FOOT	PIED	STELLFUSS	512.004.00		4	4	4	4		
101	MOTORE	MOTOR	MOTEUR	MOTOR	564.042.00	*	1	2	1	2		
102	BOCCOLA	PLAIN BEARING	PALIER LISSE	BUCHSE	551.016.00	*	1	2	1	2		
103	VENTOLA	FAN	VENTILATEUR	LÜFTERRAD	544.021.00	*	1	2	1	2		
104	GRIGLIA VENTILAZIONE	VENTILATION GRID	GRILLE D'AÉRATION	LÜFTUNGSGITTER	256.485.00		1		1			
					256.486.00			1		1		
105	VASCHETTA CONDENSA	CONDENSATE DRAIN PAN	BAC À CONDESAT	TAUWASSERBEHÄLTER	511.140.00		1	1	1	1	**FROM: 30.04.2014**	**TO: 01.06.2014**
					511.184.00		1	1	1	1	**FROM: 02.06.2014**	**TO:....**
106	TUBO SCARICO	EXHAUST PIPE	TUYAU D'ÉCHAPPEMENT	ABLAUFROHR	552.012.00		1	1	1	1	**FROM: 30.04.2014**	**TO: 01.06.2014**
					552.011.00		1	1	1	1	**FROM: 02.06.2014**	**TO:....**
107	ELETTROVALVOLA	SOLENOID VALVE	ELECTROVANNE	ELEKTROVENTIL	256.254.00		1		1			
					256.255.00			1		1		
108	EROGATORE	NOZZLE	INJECTEUR	SPRÜHDOSE	531.045.00		1	2	1	2		
109	TUBO CARICO	INLET HOSE	TUYAU DE CHARGEMENT	BELASTUNG-ROHR	552.010.00			1		1		
					552.013.00		1		1			
110	TUBO CARICO L=700	INLET HOSE L=700	TUYAU DE CHARGEMENT L=700	BELASTUNG-ROHR L=700	552.011.00		-	1	-	1		
111	LAMPADA FORNO	OVEN LIGHT	LAMPE DU FOUR	BACKOFENLAMPE	256.256.00		1	2	1	2		
111a	LAMPADA	LAMP	LAMPE	LAMPE	563.009.00		1	2	1	2		
111b	VETRO	GLASS	VERRE	GLAS	555.025.00		1	2	1	2		
112	MICRO PORTA	DOOR MICROSWITCH	MICROINTERRUPTEUR PORTE	TUERKONTAKT SCHALTER	961.021.00	*	1	1	1	1		
113	REGGIGRIGLIA	TRAY RACK	PORTE-PLAQUES	EINHÄNGEGESTELL	583.021.00		2		2			
					583.023.00			2		2		
114	FISSAGGIO REGGIGRIGLIA	TRAY RACK FIXING	FIXAGE PORTE-PLAQUES	BEFESTIGUNG DES EINHÄNGEGESTELLS	541.050.00		8	8	8	8		
115	FILTRO SCARICO	EXHAUST FILTER	FILTRE D'ECHAPPEMENT	ABLAUFFILTER	522.357.00		1	1	1	1		
116	FILTRO CIECO	BLIND FILTER	FILTRE AVEUGLE	BLIND FILTER	522.358.00		1	1	1	1		
117	MOLLA FILTRO	FILTER SPRING	RESSORT FILTRE	FILTER-SPRUNGFEDER	260.118.00		1	1	1	1		
118	RACCORDO SCARICO	DISCHARGE CONNECTION	COUPLEUR DE VIDANGE	ABLAUFANSCHLUSS	578.007.00		1	1	1	1		
119	TUBO SCARICO	EXHAUST PIPE	TUYAU D'ÉCHAPPEMENT	ABLAUFROHR	578.008.00		1	1	1	1	**FROM: 30.04.2014**	**TO: 01.06.2014**
					511.186.00		1	1	1	1	**FROM: 02.06.2014**	**TO:....**
120	MANOPOLA	KNOB	BOUTON	DREHKNOPF	651.004.00		1	1	1	1	**FROM: 30.04.2014**	**TO: 22.02.2015**
					541.061.00		1	1	1	1	**FROM: 23.02.2015**	**TO:....**
121	BRUCIATORE	BURNER	BRULEUR	BRENNER	572.016.00	*		2		2		
					572.019.00	*	2		2			
122	CAMERA COMBUSTIONE	COMBUSTION CHAMBER	CHAMBRE DE COMBUSTION	BRENNRAUM	522.261.00		1	1	1	1		
123	CAMERA COMBUSTIONE	COMBUSTION CHAMBER	CHAMBRE DE COMBUSTION	BRENNRAUM	522.262.00		1	1	1	1		
124	CANDELA ACCENSIONE	IGNITION ELECTRODE	BOUGIE D'ALLUMAGE	KERZE SCHNELLBRENNER	572.017.00	*	1	1	1	1		
125	CANDELA ACCENSIONE	IGNITION ELECTRODE	BOUGIE D'ALLUMAGE	KERZE SCHNELLBRENNER	572.018.00	*	1	1	1	1		
126	TUBO GAS	GAS PIPE	TUYAU DE GAZ	GASLEITUNG	575.008.00		1		1			
					575.006.00			1		1		
127	TUBO GAS	GAS PIPE	TUYAU DE GAZ	GASLEITUNG	575.005.00		1	1	1	1		
128	TUBO GAS	GAS PIPE	TUYAU DE GAZ	GASLEITUNG	256.261.00		1	1	1	1		
129	ELETTROVALVOLA GAS	GAS ELECTROVALVE	ÉLECTROVALVE GAZ	GAS ELEKROVENTIL	571.004.00	*	1	1	1	1		

Mod.:	FORNI A CONVEZIONE E COMBINATI CONVECTION AND COMBINED OVENS			cod. / num. 2531613.00 data / date 22/04/2014 rif. / ref. 2531612.00		RICAMBI CONSIGLIATI - RECOMMENDED SPARE PARTS - PIÈCES DÉTACHÉES RECOMMANDÉES - EMPFOHLENEN ERSATZTEILE	...FDG... 051...	...FDG... 101...	...FCG... 051...	...FCG... 101...	NOTE
POS.	DESCRIZIONE	DESCRIPTION	DENOMINATION	BENENNUNG	COD.		Q. ty				
130	SCHEDA CONTROLLO BRUCIATORE	BURNER CONTROL CARD	FICHE CONTRÔLE BRULEUR	BRENNER-KONTROLLKARTE	571.005.00	*	1	1	1	1	
131	RACCORDO	CONNECTOR	RACCORD	ANSCHLUSS	571.006.00		2	2	2	2	
132	NIPPLO	NIPPLE	RACCORD FILETÉ	NIPPEL	573.007.00		1	1	1	1	
133	SUPPORTO BULBO	LIGHT BULB SUPPORT	SUPPORT AMPOULE	LAGE DER GLÜHLAMPE	256.483.00		1	1	1	1	
134	INIETTORE	INJECTOR	INJECTEUR	INJEKTOR	521.192.00		1	2	1	2	
135	PANNELLO POSTERIORE	BACK PANEL	PANNEAU POSTERIEUR	HINTERBRETT	521.302.00		1		1		
					521.303.00			1		1	
136	PANNELLO LATERALE	LATERAL PANEL	PANNEAU LATERAL	SEITLICHES PANEL	521.290.00		2		2		
					521.188.00			2		2	
137											
138											
139											
140											
141											
142											
143											
144											
145											
146											
147											
148											
149											
150											
151											
152											
153											
154											
155											
156											
157											
158											
159											
160											
161											
162											
163											
164											
165											
166											
167											
168											
169											

Mod.:	FORNI A CONVENZIONE E COMBINATI CONVECTION AND COMBINED OVENS			cod. / num. 2531609.00 data / date 18/04/2014 rif. / ref. 2531608.00		RICAMBI CONSIGLIATI - RECOMMENDED SPARE PARTS - PIÈCES DÉTACHÉES RECOMMANDÉES - EMPFOHLENEN ERSATZTEILE	...FDE 051...	...FDE 101...	...FCE 051...	...FCE 101...	...FDG 051...	...FDG 101...	...FCG 051...	...FCG 101...	NOTE	
POS.	DESCRIZIONE	DESCRIPTION	DENOMINATION	BENENNUNG	COD.		Q. ty									
1	GUARNIZIONE	WASHER	GUARNITURE	DICHTUNGSRING	553.022.00		1		1		1		1			
					553.021.00			1		1		1		1		
2	COPPIA CERNIERE	GASKETS PAIR	COUPLE CHARNIÈRES	SCHARNIERPAAR	256.257.00		1	1	1	1	1	1	1	1	FROM: 30.04.2014	TO: 01.06.2014
					256.258.00		1	1	1	1	1	1	1	1	FROM: 02.06.2014	TO:....
2a	PERNO CERNIERA	JOINT STUD	GOUJON DE LA CHARNIÈRE	SCHARNIERBOLZEN	256.430.00	*	2	2	2	2	2	2	2	2		
3	PORTA	DOOR	PORTE	TÜR	510.130.00		1		1		1		1		FROM: 30.04.2014	TO: 01.06.2014
					510.173.00		1		1		1		1		FROM: 02.06.2014	TO:....
					510.128.00			1		1		1		1	FROM: 30.04.2014	TO: 01.06.2014
					510.174.00			1		1		1		1	FROM: 02.06.2014	TO:....
3a	VETRO INTERNO	INNER GLASS	VERRE INTÉRIEUR	INNERES GLAS	510.129.00		1		1		1		1			
					510.127.00			1		1		1		1		
3b	VETRO ESTERNO CON STRUTTURA	EXTERNAL GLASS WITH STRUCTURE	VERRE EXTÉRIEUR AVEC STRUCTURE	AUSSERGLASS MIT EINBAU	256.259.00		1		1		1		1		FROM: 30.04.2014	TO: 01.06.2014
					256.262.00		1		1		1		1		FROM: 02.06.2014	TO:....
					256.260.00			1		1		1		1	FROM: 30.04.2014	TO: 01.06.2014
					256.263.00			1		1		1		1	FROM: 02.06.2014	TO:....
3c	MANIGLIA	HANDLE	POIGNÉE	HANDGRIFF	584.010.00		1	1	1	1	1	1	1	1		
4																
5																
6																
7																
8																
9																
10																
11																
12																
13																
14																
15																
16																
17																
18																
19																
20																
21																
22																
23																
24																
25																
26																
27																
28																
29																
30																