FAGOR

FAGOR INDUSTRIAL

DESPIECE TÉCNICO
TECHNICAL PARTS

Lavadoras
Washer extractors



MODELOS
LN-11-14-18-25-35-60
LR-11-14-18-25

Diciembre 2015 December
Revisado julio 2016 July revised



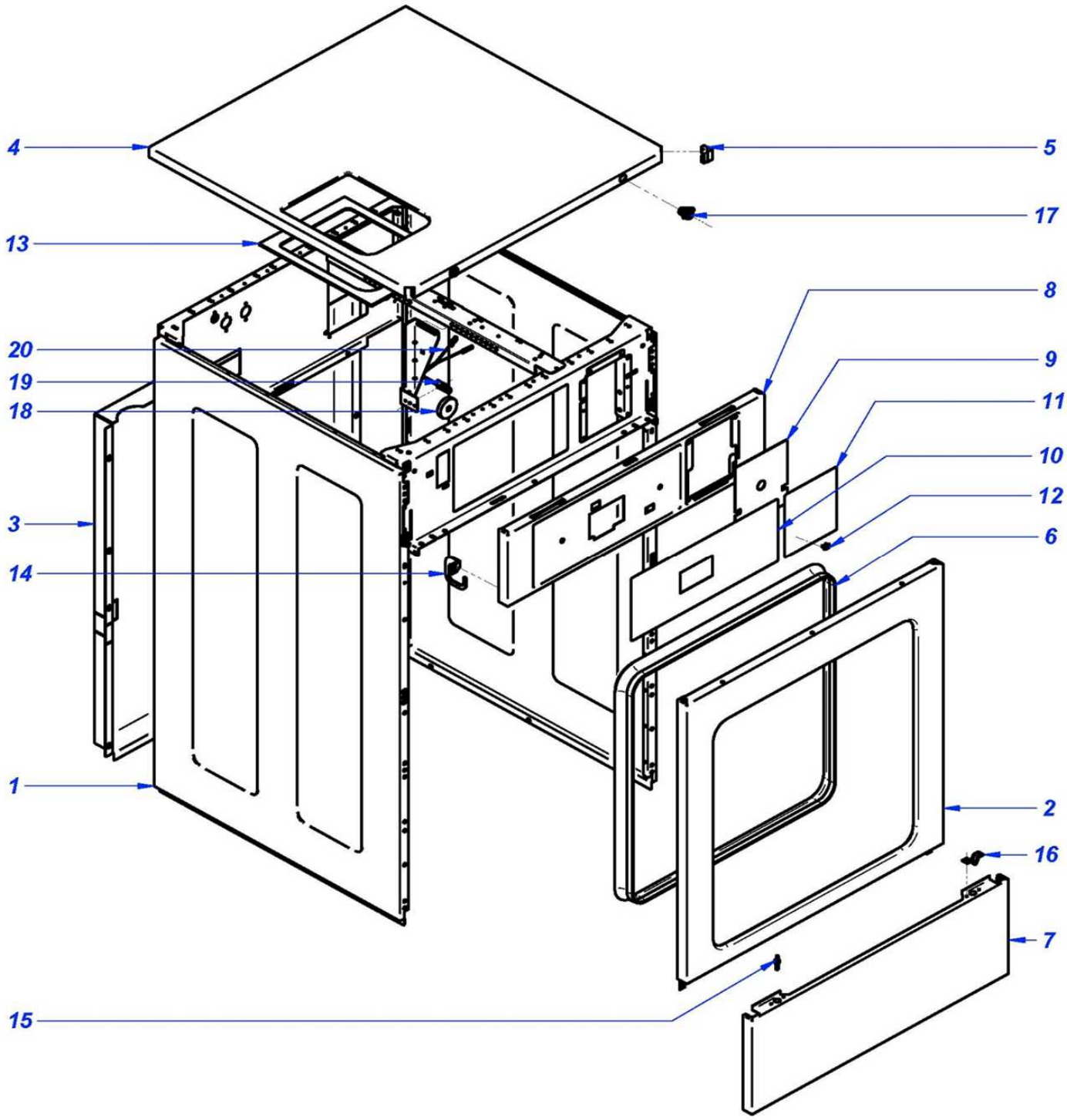

Drawing Nr.	Signature	Date	MUEBLE / CABINET	Sheet
	Iban R.	dic-15	LN_LR-11-14-18-25-35-60 TP	1

FAGOR

	MUEBLE / CABINET	LÁMINA / DRAWING		FAGOR

ITEM	REFERENCIA REFERENCE	DENOMINACIÓN	DENOMINATION	LN-11 TP	LN-14 TP	LN-18 TP	LN-25 TP	LN-35 TP	LN-60 TP		RECOMMENDED	ELIMINADO ELIMINATED	INTRODUCIDO INTRODUCED
1	12110865	PANEL LATERAL	SIDE PANEL	2									
1	12131484	PANEL LATERAL	SIDE PANEL		2								
1	12110869	PANEL LATERAL	SIDE PANEL			2							
1	12110872	PANEL LATERAL	SIDE PANEL				2						
1	12110874	PANEL LATERAL	SIDE PANEL					2					
1	12131485	PANEL LATERAL	SIDE PANEL						2				
2	12131486	PANEL FRONTAL RECTO	STRAIGHT FRONT PANEL	1	1								
2	12131487	PANEL FRONTAL RECTO	STRAIGHT FRONT PANEL			1							
2	12131488	PANEL FRONTAL RECTO	STRAIGHT FRONT PANEL				1						
2	12131489	PANEL FRONTAL RECTO	STRAIGHT FRONT PANEL					1					
2	12131490	PANEL FRONTAL RECTO	STRAIGHT FRONT PANEL						1				
3	12046941	PANEL POSTERIOR	REAR PANEL	1	1								
3	12041205	PANEL POSTERIOR	REAR PANEL			1							
3	12092609	PANEL POSTERIOR	REAR PANEL				1						
3	12046869	PANEL POSTERIOR	REAR PANEL					1					
3	12098203	PANEL POSTERIOR	REAR PANEL						1				
4	12131520	REP. ENCIMERA	WORKTOP	1									
4	12131523	REP. ENCIMERA	WORKTOP		1								
4	12131524	REP. ENCIMERA	WORKTOP			1							
4	12131525	REP. ENCIMERA	WORKTOP				1						
4	12131526	REP. ENCIMERA	WORKTOP					1					
4	12131528	REP. ENCIMERA	WORKTOP						1				
5	12039188	CANTONERA R1	R1 CORNER	2	2	2	2	2	2				
6	11000420	PERFIL A1 010 9X6 (PVC)	A1 010 9X6 PROFILE (PVC)	3	3	3	3	4	4				
7	12111767	ZOCALO	SKIRTING	1	1								
7	12111769	ZOCALO	SKIRTING			1							
7	12131529	ZOCALO	SKIRTING				1						
7	12111773	ZOCALO	SKIRTING					1					
7	12131531	ZOCALO	SKIRTING						1				
8	12131532	REP PORTAMANDOS	CONTROL PANEL	1	1								
8	12131534	REP PORTAMANDOS	CONTROL PANEL			1							
8	12131535	REP PORTAMANDOS	CONTROL PANEL				1						
8	12131536	REP PORTAMANDOS	CONTROL PANEL					1					
8	12131539	REP PORTAMANDOS	CONTROL PANEL						1				
9	12120271	TAPA MONEDERO COMPLETA	COMPLETE COIN COVER	1	1	1	1	1	1				
10	12113512	ADHESIVO FAGOR TP	FAGOR TP ADHESIVE	1	1	1	1	1	1		X		
11	12113854	ADHESIVO ON/OFF FAGOR	FAGOR ON/OFF ADHESIVE	1	1	1	1	1	1		X		
12	12119954	TAPON USB	USB CAP	1	1	1	1	1	1				
13	12009796	APOYO CUBETA DE DETERGENTES	DETERGENT TRAY SUPPORT	1	1	1	1	1	1				
14	12131540	BISAGRA PORTAMANDOS IZQ	CONTROL PANEL LEFT HINGE	1	1	1	1	1	1				
14	12131542	BISAGRA PORTAMANDOS DCH	CONTROL PANEL RICHT HINGE	1	1	1	1	1	1				
15	12008693	PITON CIERRE	LOCK BOLT	7	7	7	13	13	13				
16	12008460	CIERRRE MUELLE Fre.700 MIKALOR	Fre.700 MIKALOR LOCK SPRING	7	7	7	13	13	13				
17	12094428	CERRADURA 0330	0330 LOCK	2	2	2	2	2	2				

	MUEBLE / CABINET	LÁMINA / DRAWING		FAGOR

ITEM	REFERENCIA REFERENCE	DENOMINACIÓN	DENOMINATION	LR-11 TP	LR-14 TP	LR-18 TP	LR-25 TP				RECOMMENDED	ELIMINADO ELIMINATED	INTRODUCIDO INTRODUCED
1	12110865	PANEL LATERAL	SIDE PANEL	2									
1	12131484	PANEL LATERAL	SIDE PANEL		2								
1	12110869	PANEL LATERAL	SIDE PANEL			2							
1	12110872	PANEL LATERAL	SIDE PANEL				2						
2	12131486	PANEL FRONTAL RECTO	STRAIGHT FRONT PANEL	1	1								
2	12131487	PANEL FRONTAL RECTO	STRAIGHT FRONT PANEL			1							
2	12131488	PANEL FRONTAL RECTO	STRAIGHT FRONT PANEL				1						
3	12127909	PANEL POSTERIOR	REAR PANEL	1	1								
3	12120896	PANEL POSTERIOR	REAR PANEL			1							
3	12119886	PANEL POSTERIOR	REAR PANEL				1						
4	12131520	REP. ENCIMERA	WORKTOP	1									
4	12131523	REP. ENCIMERA	WORKTOP		1								
4	12131524	REP. ENCIMERA	WORKTOP			1							
4	12131525	REP. ENCIMERA	WORKTOP				1						
5	12039188	CANTONERA R1	R1 CORNER	2	2	2	2						
6	11000420	PERFIL A1 010 9X6 (PVC)	A1 010 9X6 PROFILE (PVC)	3	3	3	3						
7	12111767	ZOCALO	SKIRTING	1	1								
7	12111769	ZOCALO	SKIRTING			1							
7	12131529	ZOCALO	SKIRTING				1						
8	12131532	REP PORTAMANDOS	CONTROL PANEL	1	1								
8	12131534	REP PORTAMANDOS	CONTROL PANEL			1							
8	12131535	REP PORTAMANDOS	CONTROL PANEL				1						
9	12120271	TAPA MONEDERO COMPLETA	COMPLETE COIN COVER	1	1	1	1						
10	12113512	ADHESIVO FAGOR TP	FAGOR TP ADHESIVE	1	1	1	1				X		
11	12113854	ADHESIVO ON/OFF FAGOR	FAGOR ON/OFF ADHESIVE	1	1	1	1				X		
12	12119954	TAPON USB	USB CAP	1	1	1	1						
13	12009796	APOYO CUBETA DE DETERGENTES	DETERGENT TRAY SUPPORT	1	1	1	1						
14	12131540	BISAGRA PORTAMANDOS IZQ	CONTROL PANEL LEFT HINGE	1	1	1	1						
14	12131542	BISAGRA PORTAMANDOS DCH	CONTROL PANEL RICHT HINGE	1	1	1	1						
15	12008693	PITON CIERRE	LOCK BOLT	7	7	7	13						
16	12008460	CIERRRE MUELLE Fre.700 MIKALOR	Fre.700 MIKALOR LOCK SPRING	7	7	7	13						
17	12094428	CERRADURA 0330	0330 LOCK	2	2	2	2						

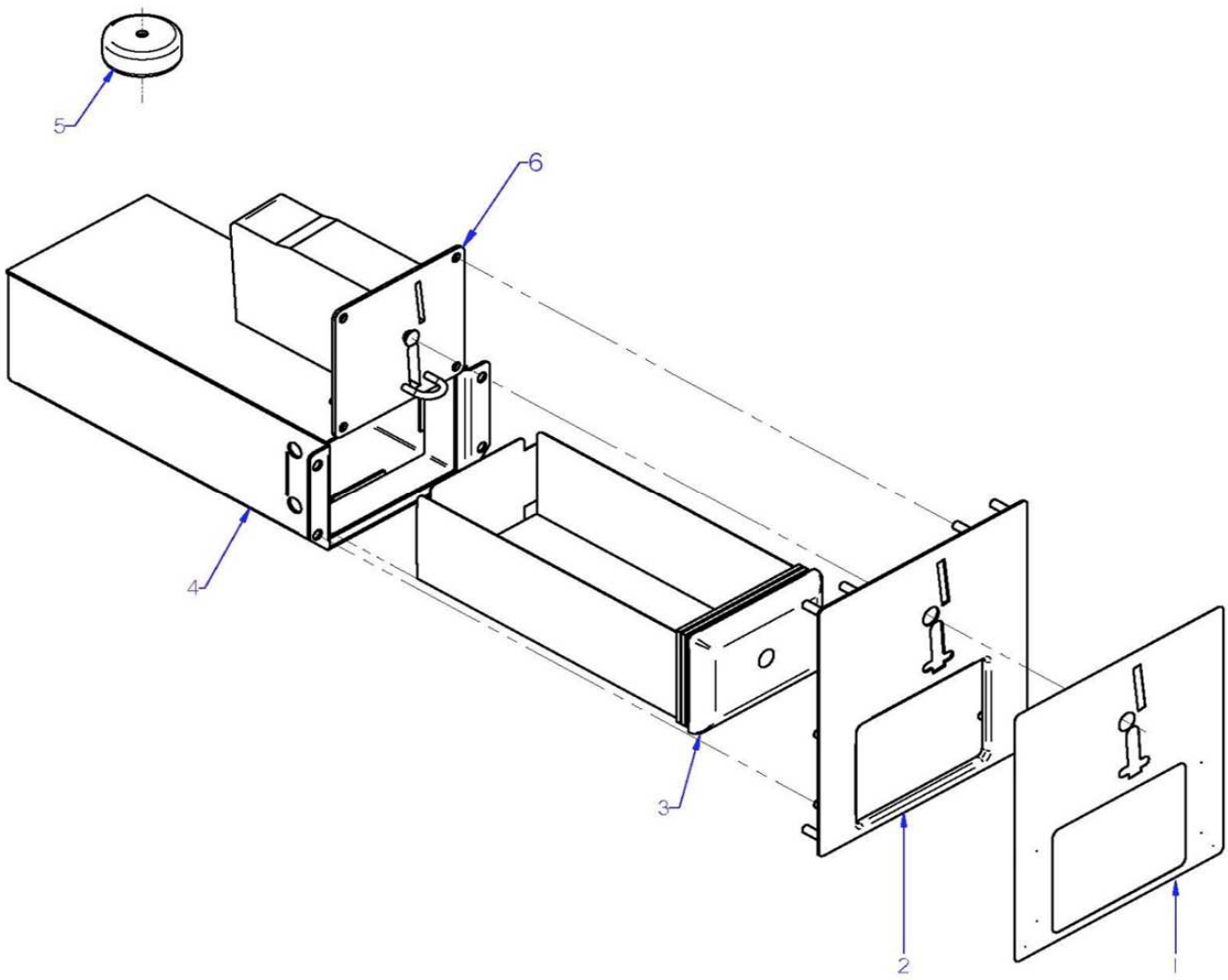

Drawing Nr.	Signature	Date	MONEDERO / KIT COIN	Sheet
	Iban R.	dic-15	LN_LR-11-14-18-25-35-60 TP	2

FAGOR

	KIT MONEDERO / COIN SLOT KIT	LÁMINA / DRAWING		FAGOR

ITEM	REFERENCIA REFERENCE	DENOMINACIÓN	DENOMINATION	LN/LR-11 TP	LN/LR-14 TP	LN/LR-18 TP	LN/LR-25 TP	LN-35 TP	LN-60 TP		RECOMMENDED	ELIMINADO ELIMINATED	INTRODUCIDO INTRODUCED
1	12007739	ADHESIVO MONEDERO FAGOR	COIN SLOT ADHESIVE FAGOR	1	1	1	1	1	1				
2	12130334	CHAPA MONEDERO COMPL.	COIN SLOT PLATE COMPL.	1	1	1	1	1	1				
3	12023400	CAJA MONEDAS CON LLAVE (XL 8 MON	COIN DRAWER (XL 8 MONEY BOX)	1	1	1	1	1	1				
4	12130337	PORTA CAJA MONEDAS COMPL.	COIN BOX HOLDER COMPL.	1	1	1	1	1	1				
5	12009621	TRANSFORMADOR MONEDERO	COIN SLOT TRANSFORMER	1	1	1	1	1	1				
6	12023342	MONEDERO WH (EUR-GBP)	COIN SLOT WH (EUR-GBP)	1	1	1	1	1	1				
6	12044494	MONEDERO WH (ARS-CLP-BRL)	COIN SLOT WH (ARS-CLP-BRL)	1	1	1	1	1	1				
6	12044490	MONEDERO WH (AUD-NZD-JPY)	COIN SLOT WH (AUD-NZD-JPY)	1	1	1	1	1	1				
6	12044488	MONEDERO WH (CNY-TWD-HKD)	COIN SLOT WH (CNY-TWD-HKD)	1	1	1	1	1	1				
6	12044496	MONEDERO WH (MAD-DZD-TND)	COIN SLOT WH (MAD-DZD-TND)	1	1	1	1	1	1				
6	12044489	MONEDERO WH (MYR-SGD-IDR)	COIN SLOT WH (MYR-SGD-IDR)	1	1	1	1	1	1				
6	12044492	MONEDERO WH (RUB-ROB-CZK)	COIN SLOT WH (RUB-ROB-CZK)	1	1	1	1	1	1				
6	12044491	MONEDERO WH (TRY-PLN)	COIN SLOT WH (TRY-PLN)	1	1	1	1	1	1				
6	12044487	MONEDERO WH (USD-MXN-CAD)	COIN SLOT WH (USD-MXN-CAD)	1	1	1	1	1	1				
6	12044493	MONEDERO WH (VEF-PEN-COP)	COIN SLOT WH (VEF-PEN-COP)	1	1	1	1	1	1				
S/N	12046624	CABLEADO MONEDERO EMP 500	MONEDERO EMP 500 WIRING	1	1	1	1	1	1				
	19034820	FAGOR KIT MONEDERO EUR-GBP	FAGOR KIT COIN 2015 EUR-GBP										
	19034827	FAGOR KIT MONEDE. ARS-CLP-BRL	FAGOR KIT COIN 2015 ARS-CLP-BRL										
	19034824	FAGOR KIT MONEDE. AUD-NZD-JPY	FAGOR KIT COIN 2015 AUD-NZD-JPY										
	19034822	FAGOR KIT MONED. CNY-TWD-HKD	FAG. KIT COIN 2015 CNY-TWD-HKD										
	19034829	FAGOR KIT MONED. MAD-DZD-TND	FAGOR KIT COIN 2015 MAD-DZD-TND										
	19034826	FAGOR KIT MONED. MYR-SGD-IDR	FAGOR KIT COIN 2015 MYR-SGD-IDR										
	19034825	FAGOR KIT MONED. RUB-ROB-CZK	FAGOR KIT COIN 2015 RUB-ROB-CZK										
	19034823	FAGOR KIT MONEDERO TRY-PLN	FAGOR KIT COIN 2015 TRY-PLN										
	19034821	FAGOR KIT MONED. USD-MXN-CAD	FAGOR KIT COIN 2015 USD-MXN-CAD										
	19034828	FAGOR KIT MONED. VEF-PEN-COP	FAG. KIT COIN 2015 VEF-PEN-COP										
	19018489	FAGOR KIT MONED. KOR-THL-PHL	FAG. KIT COIN 2015 KOR-THL-PHL										

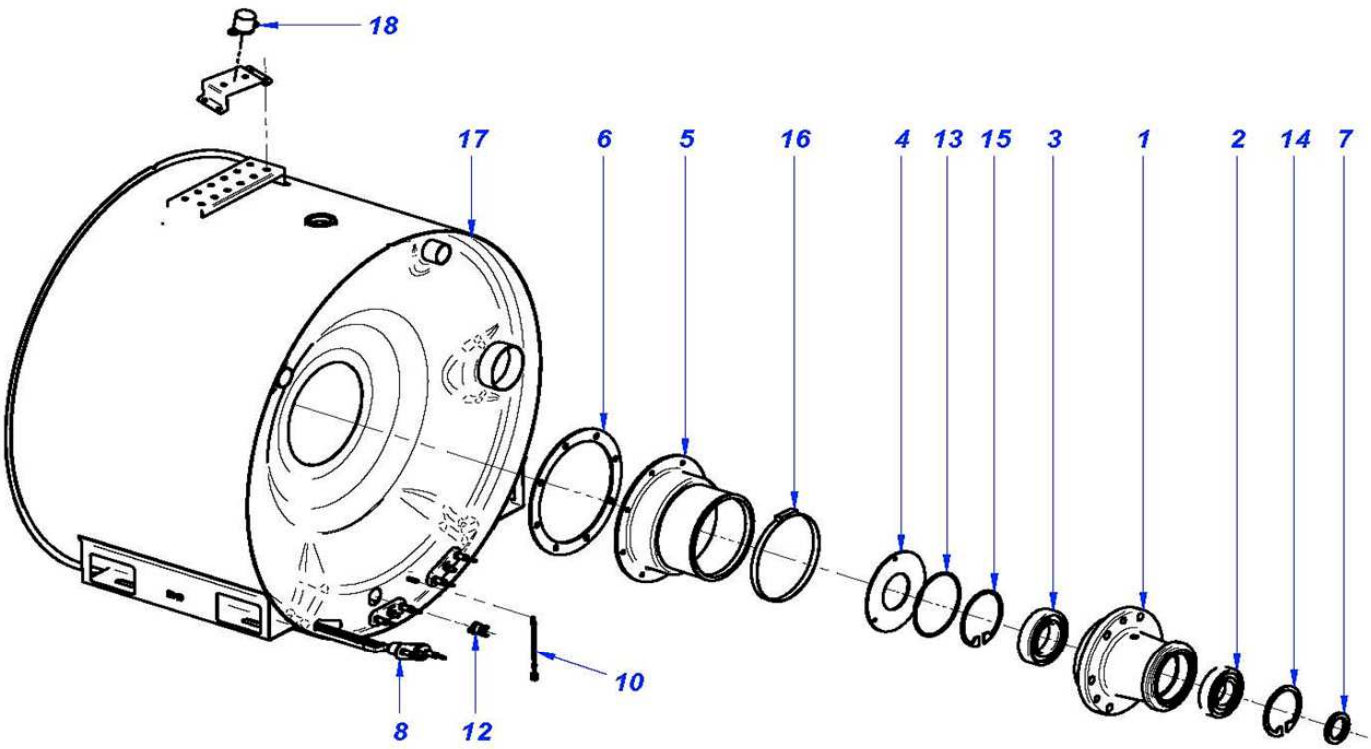

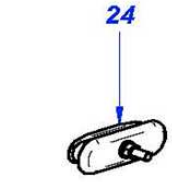

VERSIÓN AGUA CALIENTE
HOT WATER VERSION

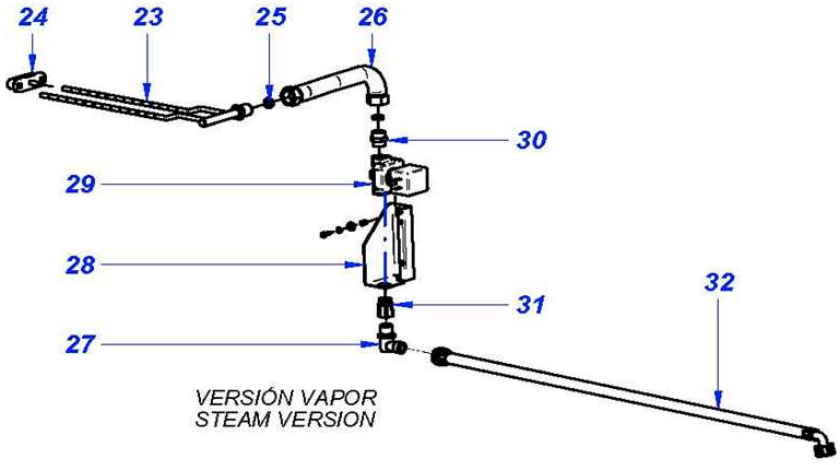

VERSIÓN VAPOR
STEAM VERSION

Drawing Nr.	Signature	Date	CUBA / TUB	Sheet
	Iban R.	sep-15	LN_LR-11-14-18-25-35-60 TP	3

FAGOR

	CUBA / TUB		LÁMINA / DRAWING							FAGOR

ITEM	REFERENCIA REFERENCE	DENOMINACIÓN	DENOMINATION	LN-11 TP	LN-14 TP	LN-18 TP	LN-25 TP	LN-35 TP	LN-60 TP		RECOMMENDED	ELIMINADO ELIMINATED	INTRODUCIDO INTRODUCED
1	12047101	SOP RODAMIENTOS MECANIZADO	MECHANIIZED BEARING SUPPORT	1									
1	12095450	SOP RODAMIENTOS MECANIZADO	MECHANIIZED BEARING SUPPORT		1								
1	12095451	SOP RODAMIENTOS MECANIZADO	MECHANIIZED BEARING SUPPORT			1							
1	12095452	SOP RODAMIENTOS MECANIZADO	MECHANIIZED BEARING SUPPORT				1						
1	12095453	SOP RODAMIENTOS MECANIZADO	MECHANIIZED BEARING SUPPORT					1					
1	12096461	SOP RODAMIENTOS MECANIZADO	MECHANIIZED BEARING SUPPORT						1				
2	12047104	RODAMIENTO 6208 40X80X18	BEARING 6208 40X80X19	1									
2	12024905	RODAMIENTO 45/85/19	BEARING 45/85/19		1								
2	12024886	RODAMIENTO 6210-2Z	BEARING 6210-2Z			1							
2	12023485	RODAMIENTO 6212-2RS1	BEARING 6212-2RS1				1						
2	12023411	RODAMIENTO 6216-2RS1	BEARING 6216-2RS1					1					
2	12097296	RODAMIENTO 6316 ZZ (80x170x39)	BEARING 6316 ZZ (80x170x39)						1				
3	12024886	RODAMIENTO 6210-2Z	BEARING 6210-2Z	1									
3	12024842	RODAMIENTO 55/100/21	BEARING 55/100/21		1								
3	12023485	RODAMIENTO 6212-2RS1	BEARING 6212-2RS1			1							
3	12023445	RODAMIENTO 6214-2RS1	BEARING 6214-2RS1				1						
3	12023428	RODAMIENTO 6312-2Z	BEARING 6312-2Z					1					
3	12097295	RODAMIENTO 6318 DDU (90x190x43)	BEARING 6318 DDU (90x190x43)						1				
4	12047599	CHAPA CONTRARETEN	FLAT LIP SEAL SHEET	1									
4	12047324	CHAPA CONTRARETEN	FLAT LIP SEAL SHEET		1								
4	12047932	CHAPA CONTRARETEN	FLAT LIP SEAL SHEET			1							
4	12047136	CHAPA CONTRARETEN	FLAT LIP SEAL SHEET				1						
4	12047934	CHAPA CONTRARETEN	FLAT LIP SEAL SHEET					1					
4	12098163	CHAPA CONTRARETEN	FLAT LIP SEAL SHEET						1				
5	12047895	CONDUCTO CUBA	TUB PIPE	1	1								
5	12047896	CONDUCTO CUBA	TUB PIPE			1							
5	12047897	CONDUCTO CUBA	TUB PIPE				1						
5	12047898	CONDUCTO CUBA	TUB PIPE					1					
5	12098160	CONDUCTO CUBA	TUB PIPE						1				
6	12047939	CHAPA CONDUCTO CUBA	TUB PIPE SHEET	1	1								
6	12047942	CHAPA CONDUCTO CUBA	TUB PIPE SHEET			1							
6	12047941	CHAPA CONDUCTO CUBA	TUB PIPE SHEET				1						
6	12047943	CHAPA CONDUCTO CUBA	TUB PIPE SHEET					1					
6	12098161	CHAPA CONDUCTO CUBA	TUB PIPE SHEET						1				
7	12025103	CASQUILLO ADAPTADOR POLEA	PULLEY ADAPTER BUSHING	1	1	1							
8	12096226	RESISTENCIA 2000W 264MM	RESISTANCE 2000W 264MM	3							X		
8	12096023	RESISTENCIA 3000W 277MM	RESISTANCE 3000W 277MM		3						X		
8	12096051	RESISTENCIA 4000W 347MM	RESISTANCE 4000W 347MM			3					X		
8	12041359	RESISTENCIA 6.000W 509MM	RESISTANCE 6.000W 509MM				3				X		
8	12092855	RESISTENCIA 7.000W 562MM	RESISTANCE 7.000W 562MM					3			X		
8	12024721	RESISTENCIA 220-240 V	RESISTANCE 220-240 V						3		X		
10	12025036	CONJUNTO SONDA 64KOhmio NTC	PROBE 64KOhm NTC	1	1	1	1	1	1		X		
12	12096597	LIMITADOR DE SEGURIDAD	SAFETY THERMOSTAT	1	1	1	1	1	1		X		
13	12009980	JUNTA TOR. 102x3	O-RING 102x3	1	1								
13	12009940	JUNTA TOR.114x3	O-RING 114x3			1							
13	12009926	JUNTA TOR.128x3	O-RING 128x3				1						
13	12010168	JUNTA TOR.150x3	O-RING 150x3					1					
13	12025230	JUNTA TOR. 200x5	O-RING 200x5						1				
14	12102684	ANILLO SEGURIDAD 80 DIN 472	LOCKING RING 80 DIN 472	1									
14	12009847	ANILLO SEG. INT. 85 DIN-472	LOCKING RING 85 DIN 472		1								
14	12009858	ANILLO SEGURIDAD 90 DIN472	LOCKING RING 90 DIN 472			1							
14	12009802	ANILLO SEGURIDAD J110X4 DIN472	LOCKING RING J110X4 DIN472				1						
14	12009798	ANILLO SEG. INT 130 DIN-472	LOCKING RING 130 DIN-472					1					
14	12124794	ANILLO SEG. INT 170 DIN472-I	LOCKING RING 170 DIN-472						1				
15	12009858	ANILLO SEGURIDAD 90 DIN472	LOCKING RING 90 DIN 472	1									
15	12024621	ANILLO SEGURIDAD 100 DIN 472	LOCKING RING 100 DIN 472		1								
14	12009802	ANILLO SEGURIDAD J110X4 DIN472	LOCKING RING J110X4 DIN472			1							
15	12024901	ANILLO SEGURIDAD 125 DIN 472	LOCKING RING 125 DIN 472				1						
15	12049333	ANILLO SEGURIDAD 140x4 DIN 472	LOCKING RING 140x4 DIN 472					1					
15	12124798	ANILLO SEG. INT 190 DIN472-I	LOCKING RING 190 DIN-472						1				
16	12117537	ABRA.SINFIN DIN3017 ZINC. 120-140S	CLAMP DIN 3017 120-140S	1	1								
16	12049363	ABRA.SINFIN DIN 3017 SW1 150-170	CLAMP DIN 3017 SW1 150-170			1	1	1	1				
17	12130503	CUBA COMPLETA	COMPLETE TUB	1									
17	12130493	CUBA COMPLETA	COMPLETE TUB		1								
17	12130973	CUBA COMPLETA	COMPLETE TUB			1							
17	12130976	CUBA COMPLETA	COMPLETE TUB				1						
17	12130551	CUBA COMPLETA	COMPLETE TUB					1					
17	12097760	CUBA COMPLETA	COMPLETE TUB						1				

	CUBA / TUB		LÁMINA / DRAWING		FAGOR

ITEM	REFERENCIA REFERENCE	DENOMINACIÓN	DENOMINATION	LN-11 TP	LN-14 TP	LN-18 TP	LN-25 TP	LN-35 TP	LN-60 TP		RECOMMENDED	ELIMINADO ELIMINATED	INTRODUCIDO INTRODUCED
18	12049241	INTERRUPTOR 12,5A 1 VIA	12,5A 1 WAY SWITCH	1	1	1	1	1	1				

ITEM	REFERENCIA REFERENCE	DENOMINACIÓN	DENOMINATION	LR-11 TP	LR-14 TP	LR-18 TP	LR-25 TP				RECOMMENDED	ELIMINADO ELIMINATED	INTRODUCIDO INTRODUCED
1	12095450	SOP RODAMIENTOS MECANIZADO	MECHANIIZED BEARING SUPPORT	1									
1	12095451	SOP RODAMIENTOS MECANIZADO	MECHANIIZED BEARING SUPPORT		1								
1	12095452	SOP RODAMIENTOS MECANIZADO	MECHANIIZED BEARING SUPPORT			1							
1	12095453	SOP RODAMIENTOS MECANIZADO	MECHANIIZED BEARING SUPPORT				1						
2	12024905	RODAMIENTO 45/85/19	BEARING 45/85/19	1									
2	12024886	RODAMIENTO 6210-2Z	BEARING 6210-2Z		1								
2	12023485	RODAMIENTO 6212-2RS1	BEARING 6212-2RS1			1							
2	12023411	RODAMIENTO 6216-2RS1	BEARING 6216-2RS1				1						
3	12024842	RODAMIENTO 55/100/21	BEARING 55/100/21	1									
3	12023485	RODAMIENTO 6212-2RS1	BEARING 6212-2RS1		1								
3	12023445	RODAMIENTO 6214-2RS1	BEARING 6214-2RS1			1							
3	12023428	RODAMIENTO 6312-2Z	BEARING 6312-2Z				1						
4	12047324	CHAPA CONTRARETEN	FLAT LIP SEAL SHEET	1									
4	12047932	CHAPA CONTRARETEN	FLAT LIP SEAL SHEET		1								
4	12047136	CHAPA CONTRARETEN	FLAT LIP SEAL SHEET			1							
4	12047934	CHAPA CONTRARETEN	FLAT LIP SEAL SHEET				1						
5	12047895	CONDUCTO CUBA	TUB PIPE	1									
5	12047896	CONDUCTO CUBA	TUB PIPE		1								
5	12047897	CONDUCTO CUBA	TUB PIPE			1							
5	12047898	CONDUCTO CUBA	TUB PIPE				1						
6	12047939	CHAPA CONDUCTO CUBA	TUB PIPE SHEET	1									
6	12047942	CHAPA CONDUCTO CUBA	TUB PIPE SHEET		1								
6	12047941	CHAPA CONDUCTO CUBA	TUB PIPE SHEET			1							
6	12047943	CHAPA CONDUCTO CUBA	TUB PIPE SHEET				1						
7	12025103	CASQUILLO ADAPTADOR POLEA	PULLEY ADAPTER BUSHING	1	1	1							
8	12096226	RESISTENCIA 2000W 264MM	RESISTANCE 2000W 264MM	1							X		
8	12096023	RESISTENCIA 3000W 277MM	RESISTANCE 3000W 277MM		1						X		
8	12096051	RESISTENCIA 4000W 347MM	RESISTANCE 4000W 347MM			1					X		
8	12041359	RESISTENCIA 6.000W 509MM	RESISTANCE 6.000W 509MM				1				X		
10	12025036	CONJUNTO SONDA 64KOhmio NTC	PROBE 64KOhm NTC	1	1	1	1				X		
12	12096597	LIMITADOR DE SEGURIDAD	SAFETY THERMOSTAT	1	1	1	1				X		
13	12009980	JUNTA TOR. 102x3	O-RING 102x3	1									
13	12009940	JUNTA TOR.114x3	O-RING 114x3		1								
13	12009926	JUNTA TOR.128x3	O-RING 128x3			1							
13	12010168	JUNTA TOR.150x3	O-RING 150x3				1						
14	12009847	ANILLO SEG. INT. 85 DIN-472	LOCKING RING 85 DIN 472	1									
14	12009858	ANILLO SEGURIDAD 90 DIN472	LOCKING RING 90 DIN 472		1								
14	12009802	ANILLO SEGURIDAD J110X4 DIN472	LOCKING RING J110X4 DIN472			1							
14	12009798	ANILLO SEG. INT 130 DIN-472	LOCKING RING 130 DIN-472				1						
15	12024621	ANILLO SEGURIDAD 100 DIN 472	LOCKING RING 100 DIN 472	1									
15	12009802	ANILLO SEGURIDAD J110X4 DIN472	LOCKING RING J110X4 DIN 472		1								
15	12024901	ANILLO SEGURIDAD 125 DIN 472	LOCKING RING 125 DIN 472			1							
15	12049333	ANILLO SEGURIDAD 140x4 DIN 472	LOCKING RING 140x4 DIN 472				1						
16	12117537	ABRA.SINFIN DIN3017 ZINC. 120-140S	CLAMP DIN 3017 120-140S	1									
16	12049363	ABRA.SINFIN DIN 3017 SW1 150-170	CLAMP DIN 3017 SW1 150-170		1	1	1						
17	12130503	CUBA COMPLETA	COMPLETE TUB	1									
17	12125195	CUBA COMPLETA	COMPLETE TUB		1								
17	12121095	CUBA COMPLETA	COMPLETE TUB			1							
17	12119670	CUBA COMPLETA	COMPLETE TUB				1						
18	12049241	INTERRUPTOR 12,5A 1 VIA	12,5A 1 WAY SWITCH	1	1	1	1						

	CUBA / TUB	LÁMINA / DRAWING		FAGOR

ITEM	REFERENCIA REFERENCE	DENOMINACIÓN	DENOMINATION	LN/LR-11 TP S	LN/LR-14 TP S	LN/LR-18 TP S	LN/LR-25 TP S	LN-35 TP S	LN-60 TP S		RECOMMENDED	ELIMINADO ELIMINATED	INTRODUCIDO INTRODUCED
23	12021970	INYECTOR VAPOR 8,13,18	STEAM JET 10,13,18	1	1	1							
23	12021640	INYECTOR VAPOR 25	STEAM JET 25, 35				1	1					
23	12021528	INYECTOR VAPOR 120 COMPL.	STEAM JET 120						1				
24	12024539	TAPON CIERRE COMPLETO	COMPLETE CLOUSURE CAP	3	3	3	3	3	3				
24	12024508	CIERRE COMPLETO	COMPLETE CLOUSURE	1	1	1	1	1	1				
25	12025033	ARANDELA VAPOR 8/13/18	STEAM WASHER 8/13/18	4	4	4	4	4					
25	12024365	ARANDELA TEFLON 24X15X4	STEAM WASHER 24X15X4						3				
26	12023461	LATIGUILLO VAP. 10-13-18 PLANO	STEAM HOSE 10-136-18 FLAT	1	1	1							
26	12023410	LATIGUILLO IZQUIERDO 25 PLANO	LEFT STEAM HOSE 25 FLAT				1	1					
27	12009102	CODO LATON	L-BEND	1	1	1							
27	12023591	CODO M-H 3/4" LATON	L-BEND M-H 3/4"				1	1					
28	12021873	SOPORTE VALVULA DE VAPOR	STEAM VALVE SUPPORT	1	1	1							
28	12021899	SOPORTE VALVULA DE VAPOR 25	STEAM VALVE SUPPORT 25				1	1					
28	12023079	SOPORTE VALVULA DE VAPOR 3/4"	STEAM VALVE SUPPORT 3/4"						1				
29	12023340	VALVULA VAPOR 1/2 50/60HZ	STEAM VALVE 1/2 50/60HZ	1	1	1	1				X		
29	12024331	VALVULA VAPOR 3/4" 60HZ.	STEAM VALVE 3/4 60HZ					1	1		X		
30	12008907	MANGUITO DOBLE 1/2	1/2 DOUBLE CONNECTION	1	1	1	1	1					
30	12024396	MANGUITO 3/4	3/4 CONNECTION	1	1	1	1	1	3				
31	12008219	RACOR 1-2	1-2 CONNECTION	1	1	1	1	1					
31	12025034	ADAPTADOR 1 1/4 - 3/4	1 1/4 - 3/4 ADAPTER						1				
32	12024330	MANGUERA VAPOR 10-13-18	STEAM HOSE 10-13-18	1	1	1							
32	12024529	MANGUERA VAPOR 25 PLANA	FLAT STEAM HOSE 25				1	1					
32	12023892	MANGUERA VAPOR PLANA 40-60	FLAT STEAM HOSE 40-60						1				

	KIT RODAMIENTOS / BEARING KIT	LÁMINA / DRAWING		FAGOR

ITEM	REFERENCIA REFERENCE	DENOMINACIÓN	DENOMINATION	LN-11 TP	LN-14/LR-11 TP	LN-18/LR-14 TP	LN-25/LR-18 TP	LN-35/LR-25 TP	LN-60 TP		RECOMMENDED	ELIMINADO ELIMINATED	INTRODUCIDO INTRODUCED
	12111220	KIT RODAMIENTOS	BEARING KIT	1									
	12111229	KIT RODAMIENTOS	BEARING KIT		1								
	12111233	KIT RODAMIENTOS	BEARING KIT			1							
	12111234	KIT RODAMIENTOS	BEARING KIT				1						
	12111235	KIT RODAMIENTOS	BEARING KIT					1					
	12131555	KIT RODAMIENTOS	BEARING KIT						1				
	12131575	KIT SOPOPORTE+RODAMIENTOS	SUPPORT+BEARING KIT	1									
	12131576	KIT SOPOPORTE+RODAMIENTOS	SUPPORT+BEARING KIT		1								
	12131577	KIT SOPOPORTE+RODAMIENTOS	SUPPORT+BEARING KIT			1							
	12131578	KIT SOPOPORTE+RODAMIENTOS	SUPPORT+BEARING KIT				1						
	12131579	KIT SOPOPORTE+RODAMIENTOS	SUPPORT+BEARING KIT					1					
	12131580	KIT SOPOPORTE+RODAMIENTOS	SUPPORT+BEARING KIT						1				

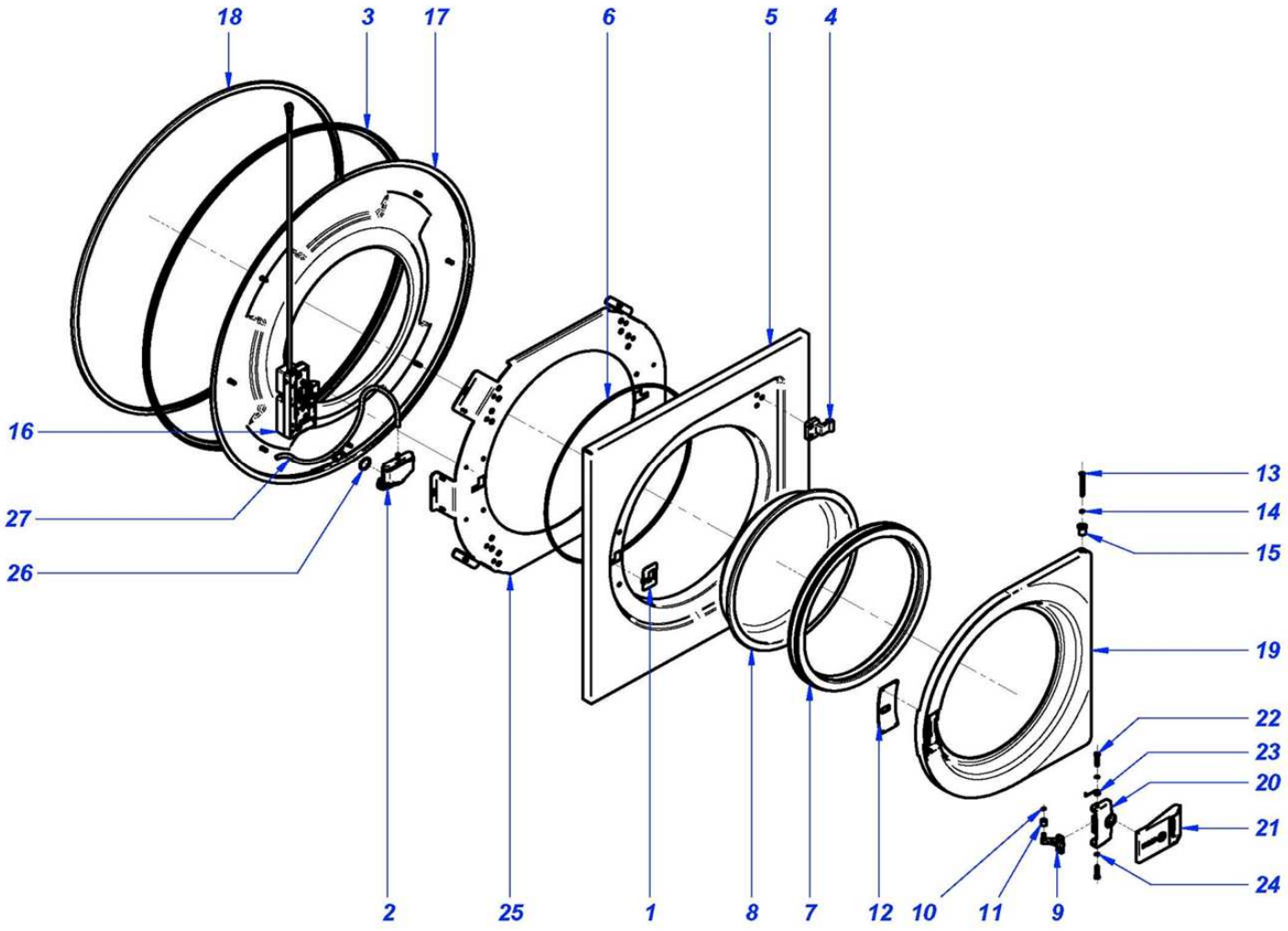

Drawing Nr.	Signature	Date	FRENTE CUBA / TUB FRONT	Sheet
	Iban R.	oct-15	LN_LR-11-14-18-25-35-60 TP	5

FAGOR

	FRENTE CUBA / TUB FRONT	LÁMINA / DRAWING		FAGOR

ITEM	REFERENCIA REFERENCE	DENOMINACIÓN	DENOMINATION	LN/LR-11 TP	LN/LR-14 TP	LN/LR-18 TP	LN/LR-25 TP	LN-35 TP	LN-60 TP		RECOMMENDED	ELIMINADO ELIMINATED	INTRODUCIDO INTRODUCED
1	12096278	EMBELLECEDOR CIERRE ADHESIVO	ADHESIVE LOCK TRIM	1	1	1	1	1	1				
2	12093146	CAMPANA TANQUE	TUB'S PRESSURE CHAMBER	1	1	1	1	1	1				
3	12023268	JUNTA CUBA	TUB SEAL	1	1								
3	12023260	JUNTA CUBA	TUB SEAL			1							
3	12023255	JUNTA CUBA	TUB SEAL				1						
3	12049084	JUNTA CUBA	TUB SEAL					1					
3	12097673	JUNTA CUBA	TUB SEAL						1				
4	12123602	BISAGRA PUERTA REDONDA	ROUNDED DOOR HINGE	2	2	2	2						
4	12046248	BISAGRA PUERTA V2	DOOR HINGE V2					2	2				
5	12121045	FONDO PUERTA	DOOR BASE	1	1	1	1						
5	12129563	FONDO PUERTA	DOOR BASE					1	1				
6	11000068	PERFIL GOMA GRIS EN U 12*6	GREY RUBBER PROFILE U12*6	2	2	2	2	2	2				
7	12023284	JUNTA PUERTA	DOOR SEAL	1	1	1	1				X		
7	12048069	JUNTA PUERTA	DOOR SEAL					1	1		X		
8	12024758	MIRILLA PUERTA	DOOR WINDOW	1	1	1	1						
8	12048068	MIRILLA PUERTA	DOOR WINDOW					1	1				
9	12023347	GANCHO REGULABLE CIERRE	REGULABLE LOCK HOOK	1	1	1	1	1	1				
10	12010155	ANILLO SEG. A6 DIN471	LOCKING RING A6 DIN471	1	1	1	1	1	1				
11	12025215	CASQUILLO PUERTA	DOOR BUSHING	1	1	1	1	1	1				
12	12122308	TAPA MANETA	LID CLOSURE	1	1	1	1	1					
12	12048681	TAPA MANETA	LID CLOSURE						1				
13	12025202	PASADOR PUERTA	DOOR PIN	2	2	2	2						
13	12048691	PASADOR LN-35 D10x55	DOOR PIN LN-35 D10x55					2	2				
14	12010103	ARANDELA SEG. 4MM DIN6799	LOCK WASHER 4MM DIN6799	2	2	2	2						
14	12010074	ARANDELA SEG. 7MM DIN6799	LOCK WASHER 7MM DIN6799					2	2				
15	12048628	COJINETE SELF-OIL	SELF-OIL BUSHING					2	2				
16	12119770	CIERRE COMPLETO 2015	COMPLETE LOCK 2015	1	1	1	1	1	1		X		
17	12121232	FRENTE CUBA COMPLETA	COMPLETE TUB FRONT	1	1								
17	12121433	FRENTE CUBA COMPLETA	COMPLETE TUB FRONT			1							
17	12121443	FRENTE CUBA COMPLETA	COMPLETE TUB FRONT				1						
17	12138928	FRENTE CUBA COMPLETA	COMPLETE TUB FRONT					1					
17	12097739	FRENTE CUBA COMPLETA	COMPLETE TUB FRONT						1				
18	12023103	CIERRE CUBA COMPLETA	COMPLETE TUB ENCLOSURE	1	1								
18	12023108	CIERRE CUBA COMPLETA	COMPLETE TUB ENCLOSURE			1							
18	12023105	CIERRE CUBA COMPLETA	COMPLETE TUB ENCLOSURE				1						
18	12049772	CIERRE CUBA COMPLETA	COMPLETE TUB ENCLOSURE					1					
18	12097675	CIERRE CUBA COMPLETA	COMPLETE TUB ENCLOSURE						1				
19	12007725	PUERTA FAGOR 2010 13,18,25	FAGOR DOOR 2010 13, 18, 25	1	1	1	1						
19	12049408	PUERTA FAGOR 2010 35	FAGOR DOOR 35					1	1				
20	12010370	MANETA PUERTA FAGOR	DOOR HANDLE FAGOR	1	1	1	1	1	1				
21	12000752	POMO FAGOR 2010	KNOB FAGOR 2010	1	1	1	1	1	1				
22	12016778	PASADOR CIERRE	LOCK PIN	2	2	2	2	2	2				
23	12023383	MUELLE CIERRE	LOCK SPRING	1	1	1	1	1	1				
24	12010103	ARANDELA SEG. 4MM DIN6799	LOCK WASHER 4MM DIN6799	2	2	2	2	2	2				
25	12131545	REP CALZO PUERTA	DOOR PROP	1	1	1	1						
25	12131552	REP CALZO PUERTA	DOOR PROP					1					
25	12131553	REP CALZO PUERTA	DOOR PROP						1				
26	12093145	JUNTA TORICA CAMPANA D25x3,5	O-RING D25x3,5	1	1	1	1	1	1				
27	11000066	TUBO GOMA NEGRO Ø 8x4	BLACK RUBBER HOSE Ø 8x4	3	3	3	3	3	3				

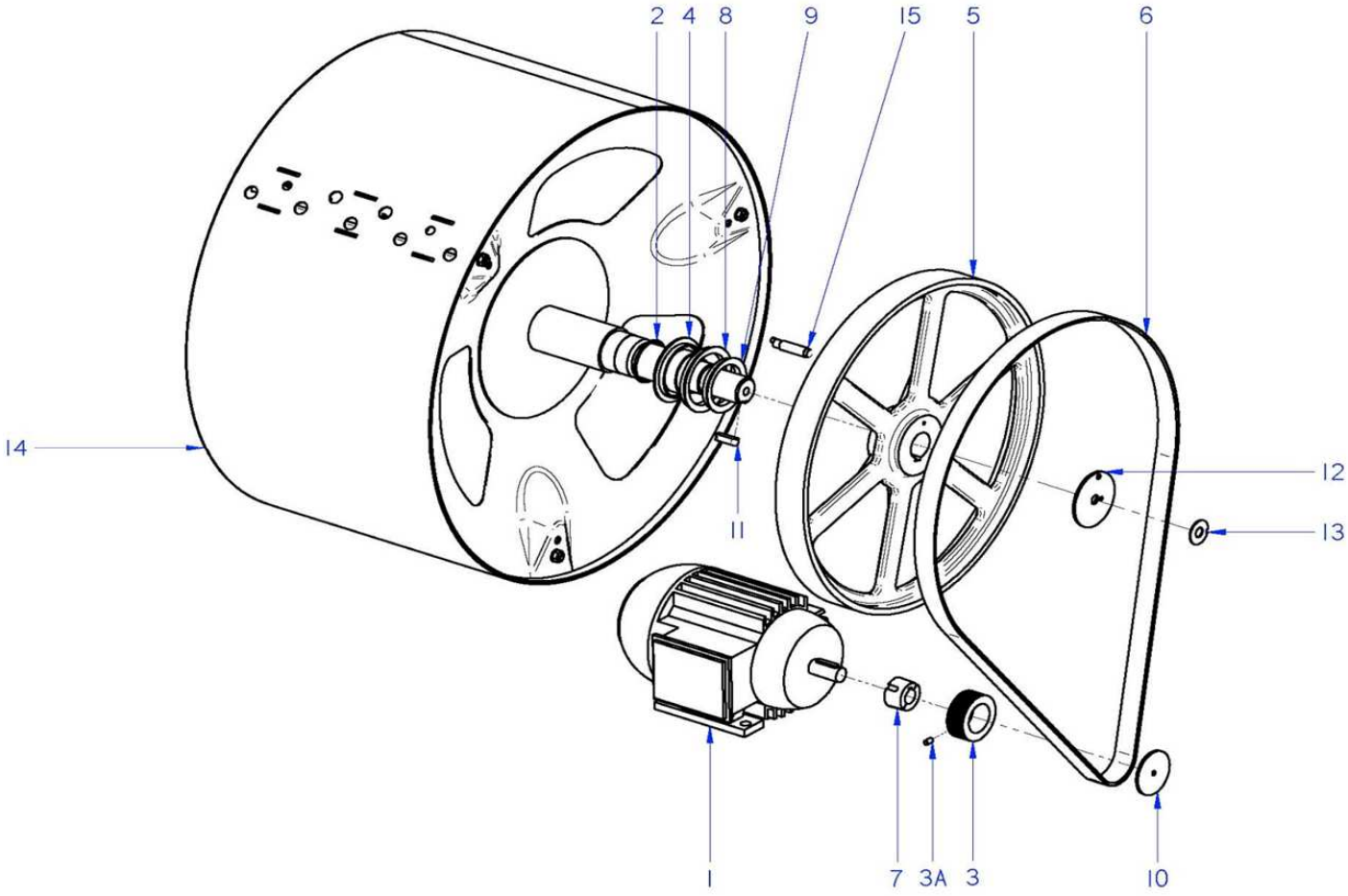

Drawing Nr.	Signature	Date	TAMBOR / DRUM	Sheet
	Iban R.	oct-15	LN_LR-11-14-18-25-35-60 TP	6

FAGOR

	TAMBOR / DRUM	LÁMINA / DRAWING		FAGOR

ITEM	REFERENCIA REFERENCE	DENOMINACIÓN	DENOMINATION	LN-11 TP	LN-14 TP	LN-18 TP	LN-25 TP	LN-35 TP	LN-60 TP		RECOMMENDED	ELIMINADO ELIMINATED	INTRODUCIDO INTRODUCED
1	12047485	MOTOR 230V AC 3 50Hz 0,75KW	ENGINE 230V AC 3 50Hz 0,75KW	1							X		
1	12049374	MOTOR 230V AC 3 50Hz 1,1KW	ENGINE 230V AC 3 50Hz 1,1KW		1						X		
1	12041186	MOTOR 230V AC 3 50Hz 1,5KW	ENGINE 230V AC 3 50Hz 1,5KW			1					X		
1	12047170	MOTOR 230V AC 3 50Hz 2,2KW	ENGINE 230V AC 3 50Hz 2,2KW				1				X		
1	12046367	MOTOR 230V AC 3 50Hz 3KW	ENGINE 230V AC 3 50Hz 3KW					1			X		
1	12120185	MOTOR 5,5KW ARCELIK	ARCELIK 5,5KW ENGINE						1		X		
2	12010172	JUNTA TOR. 43,01x37,77x2,62	O-RING 43,01x37,77x2,62	1									
2	12010067	JUNTA TOR. 60X3	O-RING 60x3		1	1							
2	12010054	JUNTA TOR.69x3	O-RING 69x3				1						
2	12010019	JUNTA TOR.82x3	O-RING 82x3					1					
2	12009968	JUNTA TORICA DIAM. INT 105X5	O-RING 105X5						1				
3	12049378	POLEA MOTOR	ENGINE PULLEY	1	1	1							
3	12121060	POLEA MOTOR	ENGINE PULLEY				1						
3	12049294	POLEA MOTOR	ENGINE PULLEY					1					
3	12097955	POLEA MOTOR	ENGINE PULLEY						1				
3A	12010264	VARILLA ROSCAD M6x10 DIN913	THREADED ROD M6x10 DIN913				2	2	2				
4	12047601	CASQUILLO EJE	AXIS BUSHING	1									
4	12047327	CASQUILLO EJE	AXIS BUSHING		1								
4	12041183	CASQUILLO EJE	AXIS BUSHING			1							
4	12046821	CASQUILLO EJE	AXIS BUSHING				1						
4	12046262	CASQUILLO EJE	AXIS BUSHING					1					
4	12097631	CASQUILLO EJE	AXIS BUSHING						1				
5	12048790	POLEA TAMBOR	DRUM PULLEY	1	1								
5	12041189	POLEA TAMBOR	DRUM PULLEY			1	1	1					
5	12097956	POLEA TAMBOR	DRUM PULLEY						1				
6	12049376	CORREA POLY-V 8PJ1752	BELT POLY-V 8PJ1752	1	1						X		
6	12041190	CORREA POLY-V 8PJ1895	BELT POLY-V 8PJ1895			1					X		
6	12047172	CORREA POLY-V 12PJ1956	BELT POLY-V 12PJ1956				1				X		
6	12046375	CORREA POLY-V 12PJ1992	BELT POLY-V 12PJ1992					1			X		
6	12098498	CORREA POLY V PK 2680	BELT POLY-V PK 2680						1		X		
7	12091726	CASQUILLO TAPER LOCK 1108x19	TAPER LOCK BUSHING 1108x19	1									
7	12091448	CASQUILLO TAPER LOCK 1108x24	TAPER LOCK BUSHING 1108x24		1	1							
8	12025221	RETEN V-RING VA-70 NBR	V-RING RETAINER VA-70 NBR	1									
8	12025038	RETEN V-RING VA-80 VITON	V-RING RETAINER VA-80 VITON		1								
8	12024987	RETEN V-RING VA-85 VITON	V-RING RETAINER VA-85 VITON			1							
8	12024988	RETEN V-RING VA-95 VITON	V-RING RETAINER VA-95 VITON				1						
8	12046264	RETEN VA-110 VITON	V-RING RETAINER VA-110 VITON					1					
8	12098162	RETEN V-RING VA-130 VITON	V-RING RETAINER VA-130 VITON						1				
9	12021041	RETEN V-RING 55A NBR	V-RING RETAINER 55A NBR	1									
9	12025226	RETEN V-RING 65 NBR	V-RING RETAINER 65A NBR		1	1							
9	12025220	RETEN V-RING VA-75 NBR	V-RING RETAINER VA-75 NBR				1						
9	12046263	RETEN VA-85 NBR	V-RING RETAINER VA-85 NBR					1					
9	12024993	RETEN V-RING VA-100 VITON	V-RING RETAINER VA-100 VITON						1				
10	12094052	ARANDELA POLEA MOTOR	ENGINE PULLEY WASHER	1									
10	12049398	ARANDELA POLEA MOTOR	ENGINE PULLEY WASHER		1	1							
10	12103750	ARANDELA POLEA MOTOR	ENGINE PULLEY WASHER				1		1				
10	12049379	ARANDELA POLEA MOTOR	ENGINE PULLEY WASHER					1					
11	12043164	CHAVETA 10x8x30 DIN6885 TIPO A	COTTER PIN 10x8x30 DIN6885 A	1	1								
11	12115159	CHAVETA 20x12x63 DIN6885 TIPO A	COTTER PIN 20x12x63 DIN 6885 A			1	1	1	1				
12	12021832	ARANDELA POLEA TAMBOR	DRUM PULLEY WASHER	1	1	1	1	1					
12	12114004	ARANDELA POLEA TAMBOR	DRUM PULLEY WASHER						1				
13	12009896	ARANDELA SEGURIDAD	LOCKING RING	1	1	1	1	1	1				
14	12103366	TAMBOR COMPLETO	COMPLETE DRUM	1									
14	12127888	TAMBOR COMPLETO	COMPLETE DRUM		1								
14	12103588	TAMBOR COMPLETO	COMPLETE DRUM			1							
14	12046812	TAMBOR COMPLETO	COMPLETE DRUM				1						
14	12103890	TAMBOR COMPLETO	COMPLETE DRUM					1					
14	12097365	TAMBOR COMPLETO	COMPLETE DRUM						1				
15	12114100	SENSOR MAGNETICO 12V	MAGNETIC SENSOR 12V	1	1	1	1	1	1				

ITEM	REFERENCIA REFERENCE	DENOMINACIÓN	DENOMINATION	LR-11 TP	LR-14 TP	LR-18 TP	LR-25 TP				RECOMMENDED	ELIMINADO ELIMINATED	INTRODUCIDO INTRODUCED
1	12047485	MOTOR 230V AC 3 50Hz 0,75KW	ENGINE 230V AC 3 50Hz 0,75KW	1							X		
1	12049374	MOTOR 230V AC 3 50Hz 1,1KW	ENGINE 230V AC 3 50Hz 1,1KW		1						X		
1	12041186	MOTOR 230V AC 3 50Hz 1,5KW	ENGINE 230V AC 3 50Hz 1,5KW			1					X		
1	12047170	MOTOR 230V AC 3 50Hz 2,2KW	ENGINE 230V AC 3 50Hz 2,2KW				1				X		
2	12010172	JUNTA TOR. 43,01x37,77x2,62	O-RING 43,01x37,77x2,62	1									
2	12010067	JUNTA TOR. 60X3	O-RING 60x3		1	1							
2	12010054	JUNTA TOR.69x3	O-RING 69x3				1						
3	12049378	POLEA MOTOR	ENGINE PULLEY	1	1	1							
3	12121060	POLEA MOTOR	ENGINE PULLEY				1						
3A	12010264	VARILLA ROSCAD M6x10 DIN913	THREADED ROD M6x10 DIN913				2						
4	12047601	CASQUILLO EJE	AXIS BUSHING	1									
4	12041183	CASQUILLO EJE	AXIS BUSHING		1								
4	12046821	CASQUILLO EJE	AXIS BUSHING			1							
4	12046262	CASQUILLO EJE	AXIS BUSHING				1						
5	12048790	POLEA TAMBOR	DRUM PULLEY	1	1								
5	12041189	POLEA TAMBOR	DRUM PULLEY			1	1						
6	12049376	CORREA POLY-V 8PJ1752	BELT POLY-V 8PJ1752	1	1						X		
6	12041190	CORREA POLY-V 8PJ1895	BELT POLY-V 8PJ1895			1					X		
6	12047172	CORREA POLY-V 12PJ1956	BELT POLY-V 12PJ1956				1				X		
7	12091726	CASQUILLO TAPER LOCK 1108x19	TAPER LOCK BUSHING 1108x19	1									
7	12091448	CASQUILLO TAPER LOCK 1108x24	TAPER LOCK BUSHING 1108x24		1	1							
8	12025038	RETEN V-RING VA-80 VITON	V-RING RETAINER VA-80 VITON	1									
8	12024987	RETEN V-RING VA-85 VITON	V-RING RETAINER VA-85 VITON		1								
8	12024988	RETEN V-RING VA-95 VITON	V-RING RETAINER VA-95 VITON			1							
8	12046264	RETEN VA-110 VITON	V-RING RETAINER VA-110 VITON				1						
9	12025226	RETEN V-RING 65 NBR	V-RING RETAINER 65A NBR	1	1								
9	12025220	RETEN V-RING VA-75 NBR	V-RING RETAINER VA-75 NBR			1							
9	12046263	RETEN VA-85 NBR	V-RING RETAINER VA-85 NBR				1						
10	12094052	ARANDELA POLEA MOTOR	ENGINE PULLEY WASHER	1									
10	12049398	ARANDELA POLEA MOTOR	ENGINE PULLEY WASHER		1	1							
10	12103750	ARANDELA POLEA MOTOR	ENGINE PULLEY WASHER				1						
11	12043164	CHAVETA 10x8x30 DIN6885 TIPO A	COTTER PIN 10x8x30 DIN6885 A	1									
11	12025213	CHAVETA TIPO A 14x9x50 DIN 6885	COTTER PIN 14x9x50 DIN 6885 A		1	1	1						
12	12021832	ARANDELA POLEA 13,18	PULLEY WASHER 13, 18	1	1	1	1						
13	12009896	ARANDELA SEGURIDAD 13	LOCKING RING 13	1	1	1	1						
14	12127620	TAMBOR COMPLETO	COMPLETE DRUM	1									
14	12125164	TAMBOR COMPLETO	COMPLETE DRUM		1								
14	12120326	TAMBOR COMPLETO	COMPLETE DRUM			1							
14	12119614	TAMBOR COMPLETO	COMPLETE DRUM				1						
15	12114100	SENSOR MAGNTICO 12V	MAGNETIC SENSOR 12V	1	1	1	1						

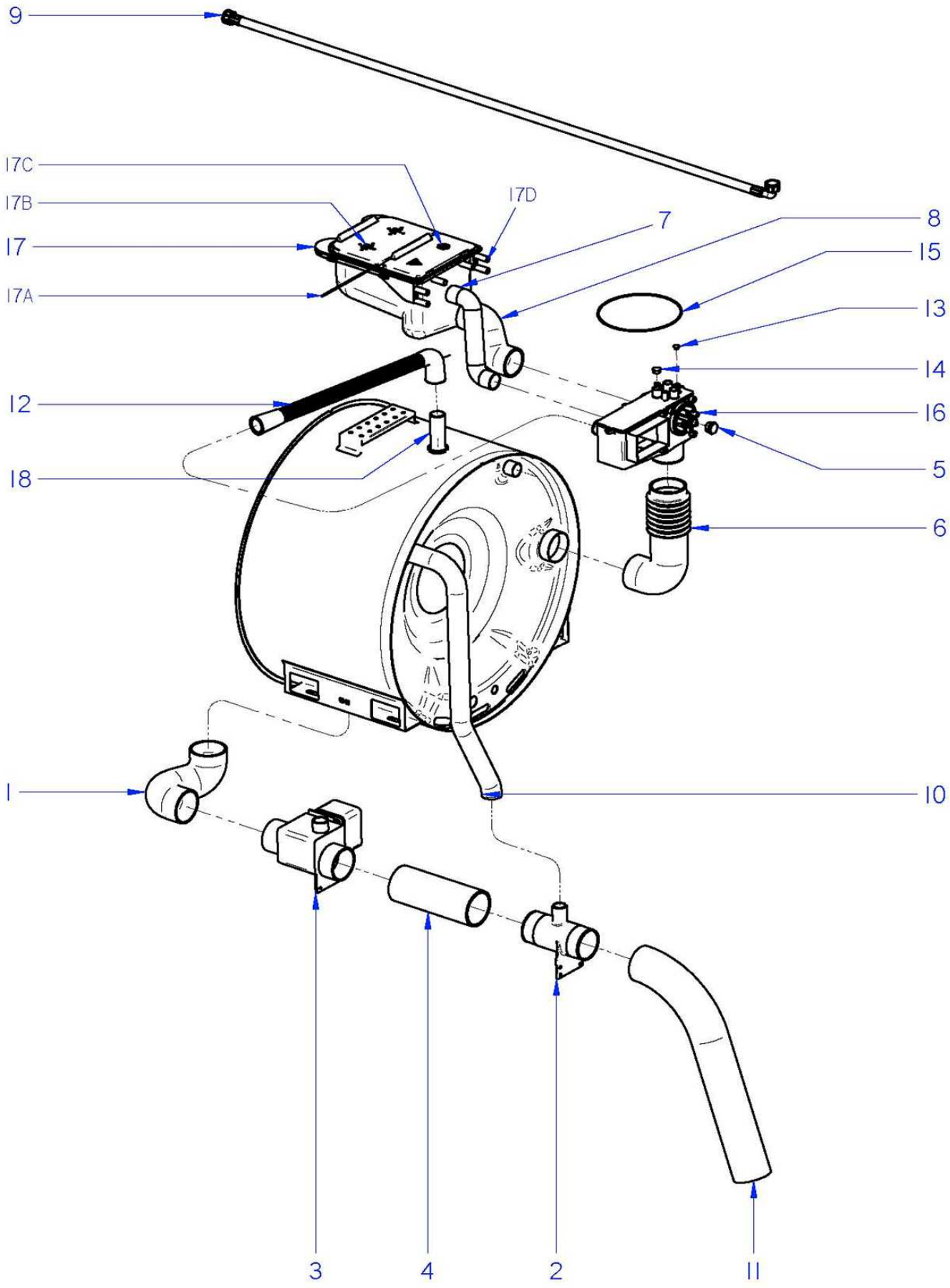

Drawing Nr.	Signature	Date	CUBETERA / TRAY	Sheet
	Iban R.	sep-15	LN_LR-11 TP	7

FAGOR

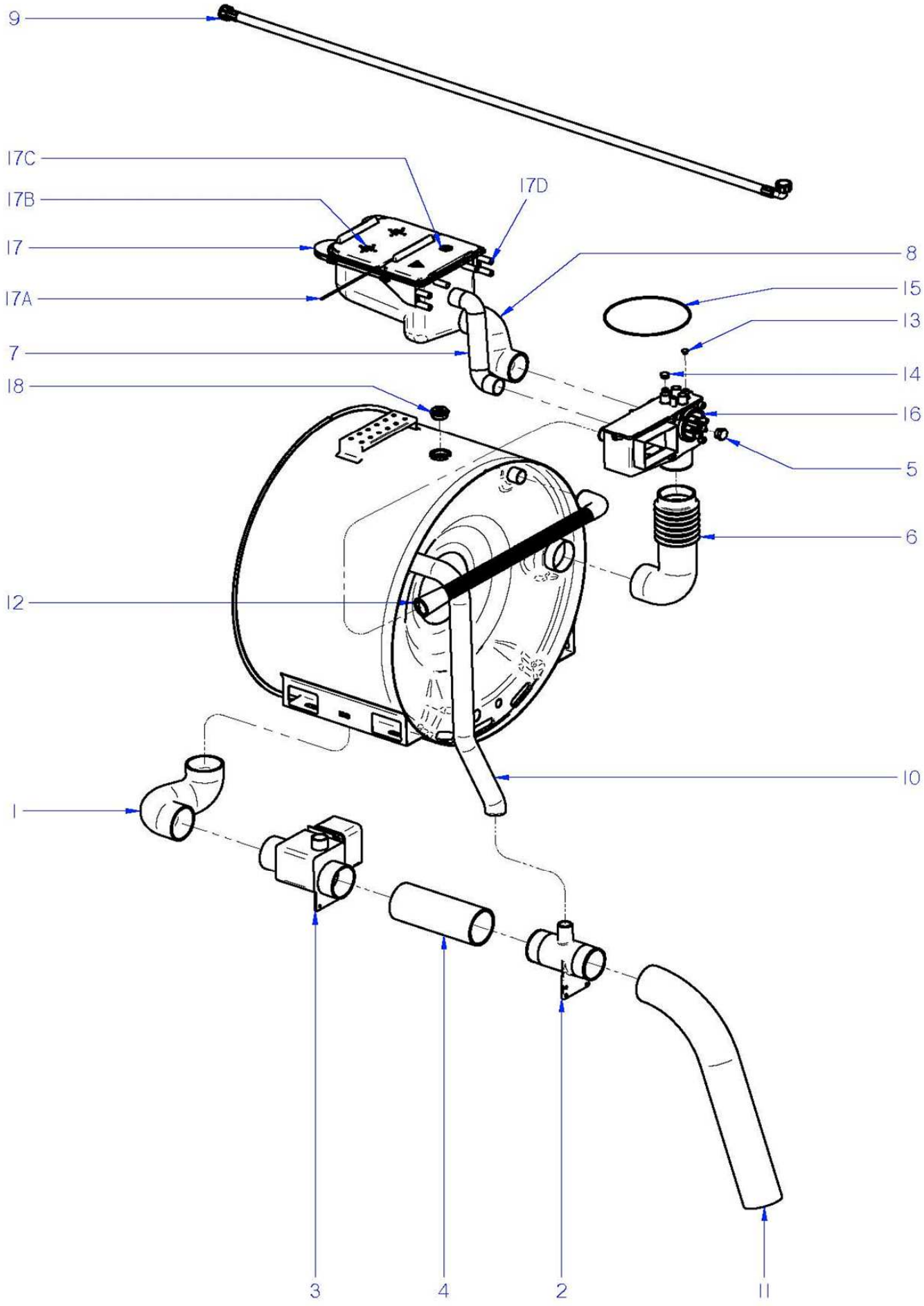

Drawing Nr.	Signature	Date	CUBETERA / TRAY	Sheet
	Iban R.	sep-15	LN_LR-14-18-25-35-60 TP	8

FAGOR

	CUBETERA / TRAY	LÁMINA / DRAWING		FAGOR

ITEM	REFERENCIA REFERENCE	DENOMINACIÓN	DENOMINATION	LN/LR-11 TP	LN/LR-14 TP	LN/LR-18 TP	LN/LR-25 TP	LN-35 TP	LN-60 TP		RECOMMENDED	ELIMINADO ELIMINATED	INTRODUCIDO INTRODUCED
1	12044165	CONDUCTO DESAGÜE CUBA	TUB DRAINAGE PIPE	1	1	1							
1	12025016	CONDUCTO DESAGÜE CUBA	TUB DRAINAGE PIPE				1						
1	12007746	CONDUCTO DESAGÜE CUBA	TUB DRAINAGE PIPE					1	1				
2	12046868	SALIDA DESAGÜE 3"	DRAINAGE OUTPUT 3"	1	1	1	1	1	1				
3	12024404	VALVULA VACIADO	DRAINAGE VALVE	1	1	1	1	1	1		X		
4	12091784	CONDUCTO VALVULA-SALIDA	DRAIN VALVE-OUTPUT PIPE	1									
4	12046143	CONDUCTO VALVULA-SALIDA	DRAIN VALVE-OUTPUT PIPE		1								
4	12046139	CONDUCTO VALVULA-SALIDA	DRAIN VALVE-OUTPUT PIPE			1							
4	12046140	CONDUCTO VALVULA-SALIDA	DRAIN VALVE-OUTPUT PIPE				1	1	1				
5	12121485	CAPUCHON CON ROSCA SR1126	THREADED CAP SR1126	1	1	1	1	1	1				
6	12023263	CONDUCTO COLECTOR-CUBA	COLLECTOR BOX-TUP PIPE	1	1								
6	12025016	CONDUCTO COLECTOR-CUBA	COLLECTOR BOX-TUP PIPE			1							
6	12025017	CONDUCTO COLECTOR-CUBA	COLLECTOR BOX-TUP PIPE				1	1	1				
7	12091758	COND. REBOSADERO CUBETERA	TRAY OVERFLOW PIPE	1									
7	12007856	COND. REBOSADERO CUBETERA	TRAY OVERFLOW PIPE		1	1							
7	12007825	COND. REBOSADERO CUBETERA	TRAY OVERFLOW PIPE				1						
7	12007811	COND. REBOSADERO CUBETERA	TRAY OVERFLOW PIPE					1					
7	12115345	COND. REBOSADERO CUBETERA	TRAY OVERFLOW PIPE						1				
8	12091756	CONDUCTO CUBETERA	TRAY PIPE	1									
8	12007772	CONDUCTO CUBETERA	TRAY PIPE		1	1							
8	12007763	CONDUCTO CUBETERA	TRAY PIPE				1						
8	12007756	CONDUCTO CUBETERA	TRAY PIPE					1					
8	12115344	CONDUCTO CUBETERA	TRAY PIPE						1				
9	12024115	MANGUERA ENTRADA AGUA	WATER INLET PIPE	1	1	1	1	1	1				
10	12023265	CONDUCTO REBOSADERO CUBA	TUB OVERFLOW PIPE	1	1								
10	12023271	CONDUCTO REBOSADERO CUBA	TUB OVERFLOW PIPE			1							
10	12024866	CONDUCTO REBOSADERO CUBA	TUB OVERFLOW PIPE				1	1	1				
11	12025026	CONDUCTO DESAGÜE	DRAINAGE PIPE	1	1	1	1	1	1				
12	12007821	MANGUERA SALIDA VAPOR	STEAM OUTPUT HOSE	1	1	1	1	1	1				
13	12010034	TAPON CAJA COLECTOR 8	COLLECTOR BOX PLUG 8	3	3	3	3	3	3				
14	12010013	TAPON CAJA COLECTOR 16	COLLECTOR BOX PLUG 16	1	1	1	1	1	1				
15	12008049	JUNTA TAPA CAJA COLECTOR	COLLECTOR BOX COVER SEAL	1	1	1	1	1	1				
16	12129972	CAJA COLECTOR COMPLETA	COMPLETE COLLECTOR BOX	1	1	1	1	1	1				
17	12007752	CUBETA DE DETERGENTES	DETERGENTS TRAY	1	1	1	1	1	1				
17A	12010483	EJE TAPAS CUBETA	TRAY COVERS AXIS	2	2	2	2	2	2				
17B	12010403	TAPA 1	COVER 1	1	1	1	1	1	1				
17C	12000747	TAPA 2	COVER 2	1	1	1	1	1	1				
17D	12010088	TAPON CUBETA DETERGENTES	DETERGENT TRAY CAP	2	2	2	2	2	2				
18	12120434	TUBO SALIDA VAPOR	STEAM OUTPUT TUBE	1									
18	12128218	TAPON CUBA 1" G	TUB CAP 1" G		1	1	1	1	1				

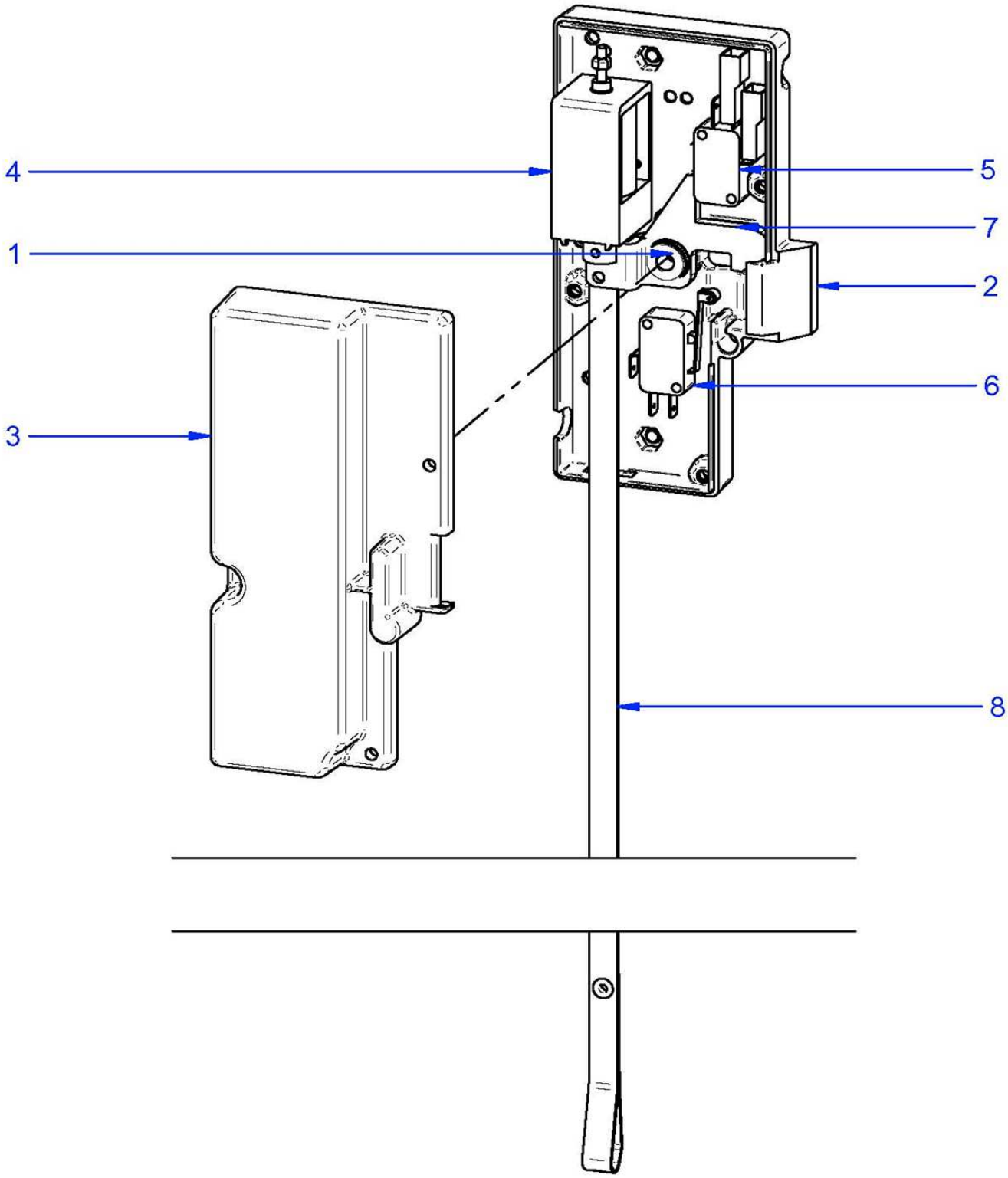

Drawing Nr.	Signature	Date	CIERRE / LOCK	Sheet
	Iban R.	sep-15	LN_LR-11-14-18-25-35-60 TP	9

FAGOR

	CIERRE / LOCK	LÁMINA / DRAWING		FAGOR

ITEM	REFERENCIA REFERENCE	DENOMINACIÓN	DENOMINATION	LN/LR-11 TP	LN/LR-14 TP	LN/LR-18 TP	LN/LR-25 TP	LN-35 TP	LN-60 TP		RECOMMENDED	ELIMINADO ELIMINATED	INTRODUCIDO INTRODUCED
	12119770	CIERRE COMPLETO 2015	COMPLETE LOCK 2015	1	1	1	1	1	1				
1	12119718	SELFOIL 6x10x10 VALONA	SELFOIL 6x10x10 VALONA	1	1	1	1	1	1				
2	12118270	BASE CIERRE 2015	LOCK BASE 2015	1	1	1	1	1	1				
3	12118278	TAPA CIERRE 2015	LOCK COVER 2015	1	1	1	1	1	1				
4	12119697	ELECTROIMAN ERB35 (NAFSA)	ELECTROMAGNET ERB35	1	1	1	1	1	1				
5	12025193	INTERRUPTOR PUERTA	DOOR SWITCH	1	1	1	1	1	1				
6	12119927	INTERRUPTOR BLOQUEO (V-16-1C5)	BLOCKING SWITCH (V-16-1C5)	1	1	1	1	1	1				
7	12118307	BLOQUEO CIERRE 2015	LOCK BLOCKING 2015	1	1	1	1	1	1				
8	12023332	TIRADOR PUERTA	DOOR PULL	1	1	1	1	1	1				

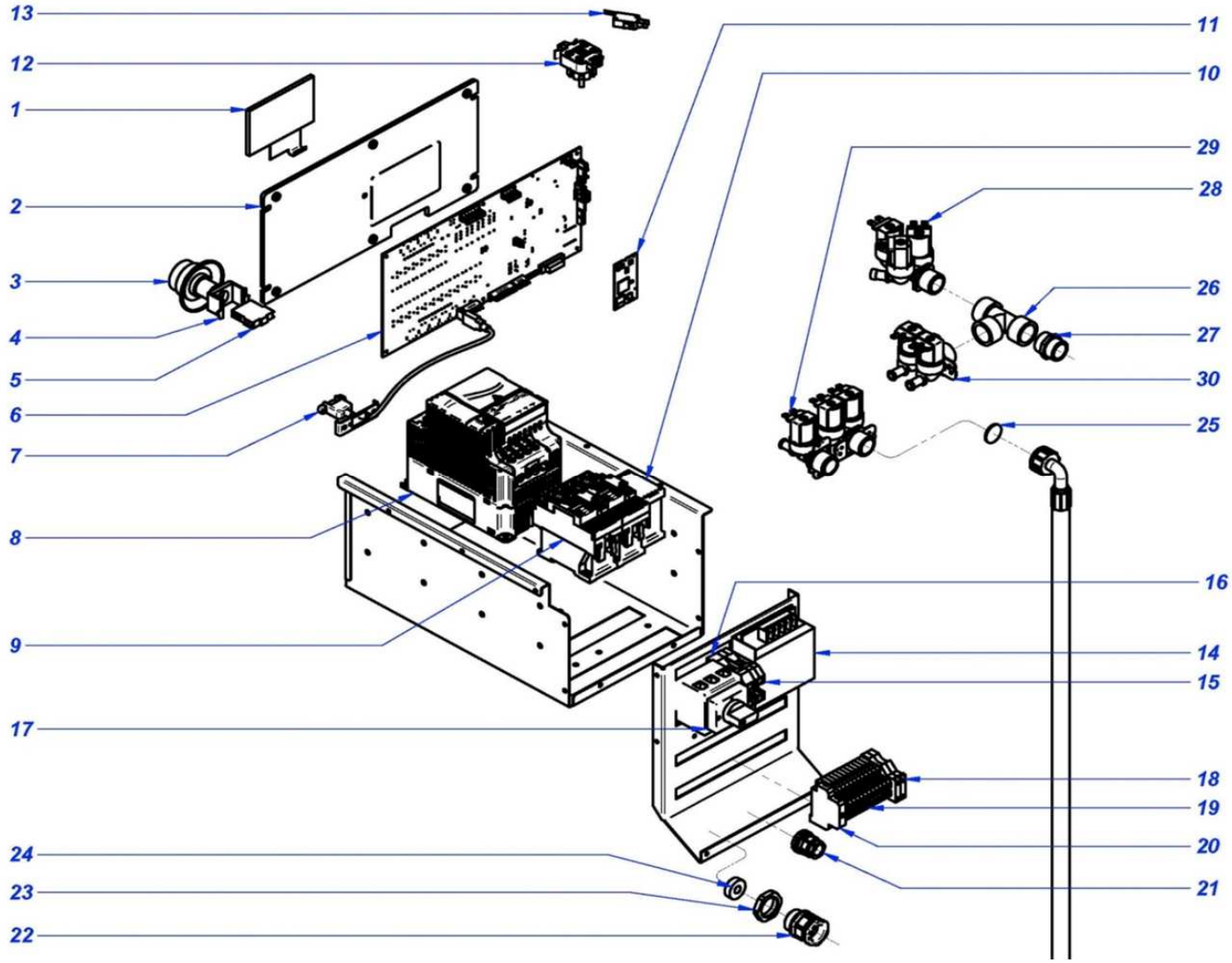

Drawing Nr.	Signature	Date	CUADRO ELECTRICO / ELECTRIC BOARD	Sheet
	Iban R.	dic-15	LAVADORAS LN-11-14-18 TP	12

FAGOR

	CUADRO ELECTRICO / ELECTRIC BOARD	LÁMINA / DRAWING		FAGOR

ITEM	REFERENCIA REFERENCE	DENOMINACIÓN	DENOMINATION	LN-11 TP	LN-14 TP	LN-18 TP	LR-11 TP	LR-14 TP	LR-18 TP		RECOMMENDED	ELIMINADO ELIMINATED	INTRODUCIDO INTRODUCED
1	12119488	DISPLAY TOUCH PLUS	DISPLAY TOUCH PLUS	1	1	1	1	1	1		X		
2	12116834	SOPORTE MAIN BOARD	SOPORTE MAIN BOARD SUPPORT	1	1	1	1	1	1				
3	12120235	SETA DE EMERGENCIA	EMERGENCY STOP BUTTON	1	1	1	1	1	1		X		
4	12120238	SOPORTE SETA EMERGENCIA	EMERGENCY STOP SUPPORT	1	1	1	1	1	1		X		
5	12120237	PULSAD. 250V AC 16A 1VIA 2POS UL	250V AC 16A 1WAY 2POS UL SWITCH	1	1	1	1	1	1		X		
6	12120815	TARJETA PRINCIPAL TP (LIGHT)	MAIN BOARD TP (LIGHT)	1	1	1	1	1	1		X		
7	12133373	CABLE USB MACHO-HEMBRA	USB WIRE MALE-FEMALE	1	1	1	1	1	1		X		
8	12134049	VARIADOR DELTA PROGRAMADO	PROGRAMMED DELTA INVERTER	1							X		
8	12134050	VARIADOR DELTA PROGRAMADO	PROGRAMMED DELTA INVERTER		1						X		
8	12134051	VARIADOR DELTA PROGRAMADO	PROGRAMMED DELTA INVERTER			1					X		
8	12133739	VARIADOR DELTA PROGRAMADO	PROGRAMMED DELTA INVERTER				1				X		
8	12133740	VARIADOR DELTA PROGRAMADO	PROGRAMMED DELTA INVERTER					1			X		
8	12133741	VARIADOR DELTA PROGRAMADO	PROGRAMMED DELTA INVERTER						1		X		
9	12111795	CONTACTOR 230V AC 20A 4via UL	230V AC 20A 4via UL CONTACTOR	2	2	2	2	2	2		X		
10	12024011	CONTACTOR 230V AC 16A 4via UL	230V AC 16A 4via UL CONTACTOR	1	1	1	1	1	1		X		
11	12131303	MODULO PROCESADOR GRABADO	RECORDED PROCESSOR MODULE	1	1	1	1	1	1		X		
12	12128262	SENSOR DE PRESION 50mbar	50mbar PRESSURE SENSOR	1	1	1	1	1	1		X		
13	12024696	MICRORRUPTOR PUERTA	DOOR MICROSWITCH	1	1	1	1	1	1				
14	12116823	TRANSFORMADOR 1N 50W 240V/12V	1N 50W 240V/12V UL TRANSFORMER	1	1	1	1	1	1		X		
15	12024515	BORNA TIERRA 35MM	GROUND CONNECTOR 35MM	1	1	1	1	1	1				
16	12025143	BORNA NEUTRA AZUL 35MM2 1vía UL	BLUE NEUTRAL CONNECTOR 35MM2	1	1	1	1	1	1				
17	12024628	INTERRUP. 63A 3VIA 2POS SECCI UL	63A 3WAY 2POS ISOLATOR SWITCH	1	1	1	1	1	1		X		
18	12025158	BORNA PORTAFUSIBLE 6,3A 1 VIA	FUSE HOLDER CONNECTOR 6,3A	2	2	2	2	2	2				
19	12025180	REGLETA 2 PISOS 24A 2,50MM2 UL	24A 2,5MM2 UL TERMINAL BLOCK	12	12	12	12	12	12				
20	12024199	TOPE FINAL	END STOP	1	1	1	1	1	1				
21	12009966	PRENSA ESTOPA DOSIFICACION	DISPENSER STUFFING BOX	1	1	1	1	1	1				
22	12009927	PRENSA ESTOPA PG-21	STUFFING BOX PG-21	1	1	1	1	1	1				
23	12009764	TUERCA ROSCA Pg 21	SCREW THREAD Pg 21	1	1	1	1	1	1				
24	12009994	JUNTA GOMA (GAES)	RUBBER SEAL	1	1	1	1	1	1				
25	12025278	FILTRO DE JUNTA N-3	JOINT FILTER N-3	2	2	2	2	2	2				
26	12024996	Te A 90º 3/4	T at 90º 3/4	1	1	1	1	1	1				
27	12024396	MANGUITO 3/4"	3/4" CONNECTION	1	1	1	1	1	1				
28	12023921	ELECTROVALVULA 3 VIAS	3 WAY SOLENOID VALVE	1	1	1	1	1	1		X		
29	12025161	ELECTROVALVULA SIMPLE	SIMPLE SOLENOID VALVE	1	1	1	1	1	1		X		
30	12023794	ELECTROVALVULA 2 VIAS	2 WAY SOLENOID VALVE	2	2	2	2	2	2		X		

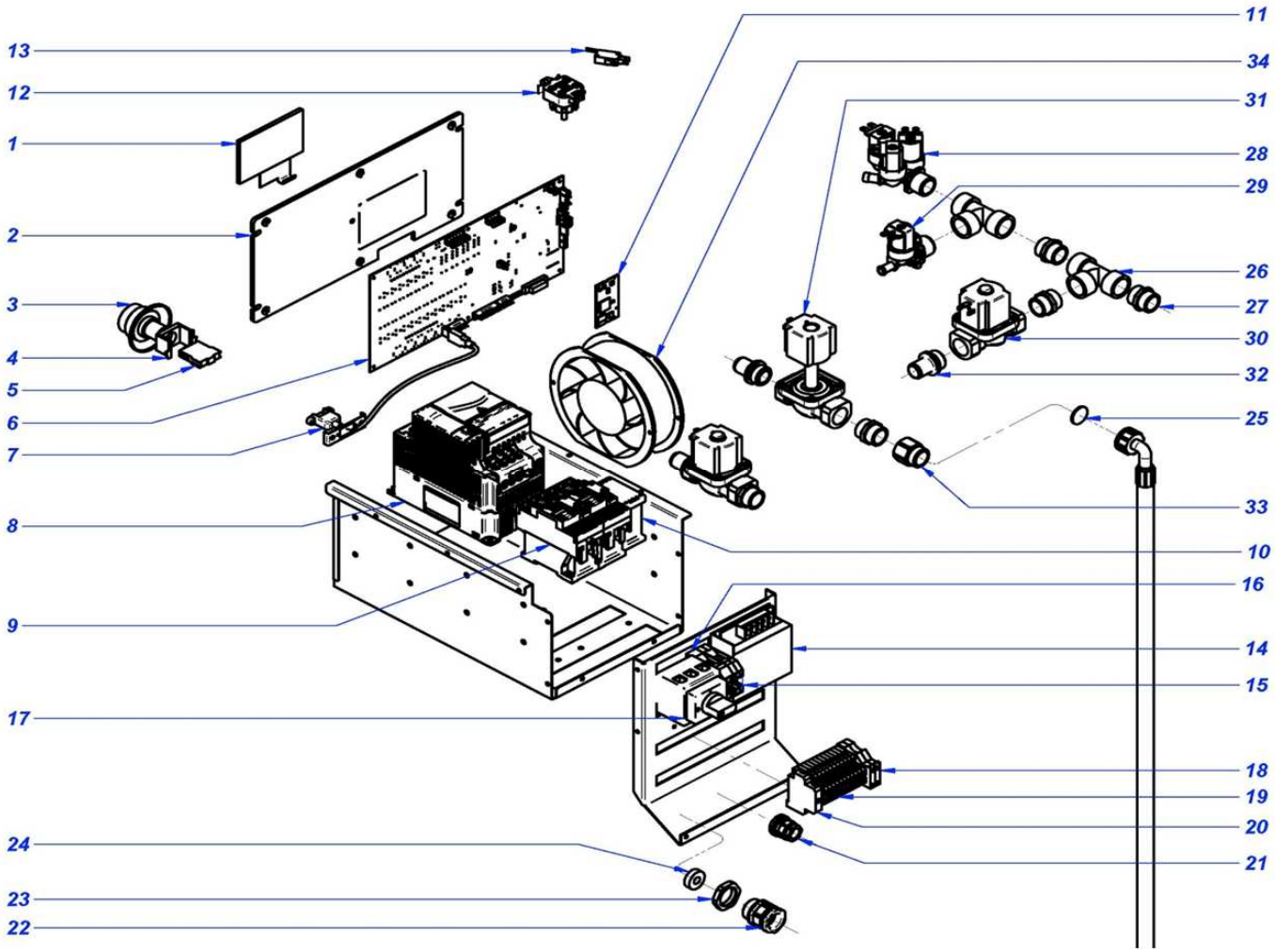

Drawing Nr.	Signature	Date	CUADRO ELECTRICO / ELECTRIC BOARD	Sheet
	Iban R.	jul-16	LAVADORAS LN-25-35-60 TP	12

FAGOR

	CUADRO ELECTRICO / ELECTRIC BOARD	LÁMINA / DRAWING		FAGOR

ITEM	REFERENCIA REFERENCE	DENOMINACIÓN	DENOMINATION	LN-25 TP	LN-35 TP	LN-60 TP	LR-25 TP				RECOMMENDED	ELIMINADO ELIMINATED	INTRODUCIDO INTRODUCED
1	12119488	DISPLAY TOUCH PLUS	DISPLAY TOUCH PLUS	1	1	1	1				X		
2	12116834	SOPORTE MAIN BOARD	SOPORTE MAIN BOARD SUPPORT	1	1	1	1						
3	12120235	SETA DE EMERGENCIA	EMERGENCY STOP BUTTON	1	1	1	1				X		
4	12120238	SOPORTE SETA EMERGENCIA	EMERGENCY STOP SUPPORT	1	1	1	1				X		
5	12120237	PULSAD. 250V AC 16A 1VIA 2POS UL	250V AC 16A 1WAY 2POS UL SWITCH	1	1	1	1				X		
6	12120815	TARJETA PRINCIPAL TP (LIGHT)	MAIN BOARD TP (LIGHT)	1	1	1	1				X		
7	12133373	CABLE USB MACHO-HEMBRA	USB WIRE MALE-FEMALE	1	1	1	1				X		
8	12134052	VARIADOR DELTA PROGRAMADO	PROGRAMMED DELTA INVERTER	1							X		
8	12131878	VARIADOR DELTA PROGRAMADO	PROGRAMMED DELTA INVERTER		1						X		
8	12134054	VARIADOR DELTA PROGR (460V)	PROGR. DELTA INVERTER (460V)			1					X		
8	12134055	VARIADOR DELTA PROGR (230V)	PROGR. DELTA INVERTER (230V)			1					X		
8	12133742	VARIADOR DELTA PROGRAMADO	PROGRAMMED DELTA INVERTER				1				X		
9	12041014	CONTACTOR 230V AC 40A 4via UL	230V AC 40A 4via UL CONTACTOR	2	2	2	2				X		
10	12024011	CONTACTOR 230V AC 16A 4via UL	230V AC 16A 4via UL CONTACTOR	1	1	1	1				X		
11	12131303	MODULO PROCESADOR GRABADO	RECORDED PROCESSOR MODULE	1	1	1	1				X		
12	12128262	SENSOR DE PRESION 50mbar	50mbar PRESSURE SENSOR	1	1		1				X		
12	12128263	SENSOR DE PRESION 100mbar	100mbar PRESSURE SENSOR			1					X		
13	12024696	MICRORRUPTOR PUERTA	DOOR MICROSWITCH	1	1	1	1						
14	12116823	TRANSFORMADOR 1N 50W 240V/12V	1N 50W 240V/12V UL TRANSFORMER	1	1	1	1				X		
15	12024515	BORNA TIERRA 35MM	GROUND CONNECTOR 35MM	1	1	1	1						
16	12025143	BORNA NEUTRA AZUL 35MM2 1vía UL	BLUE NEUTRAL CONNECTOR 35MM2	1	1	1	1						
17	12024628	INTERRUP. 63A 3VIA 2POS SECCI UL	63A 3WAY 2POS ISOLATOR SWITCH	1	1	1	1				X		
18	12025158	BORNA PORTAFUSIBLE 6,3A 1 VIA	FUSE HOLDER CONNECTOR 6,3A	2	2	2	2						
19	12025180	REGLETA 2 PISOS 24A 2,50MM2 UL	24A 2,5MM2 UL TERMINAL BLOCK	12	12	12	12						
20	12024199	TOPE FINAL	END STOP	1	1	1	1						
21	12009966	PRENSA ESTOPA DOSIFICACION	DISPENSER STUFFING BOX	1	1	1	1						
22	12009927	PRENSA ESTOPA PG-21	STUFFING BOX PG-21	1	1	1	1						
23	12009764	TUERCA ROSCA Pg 21	SCREW THREAD Pg 21	1	1	1	1						
24	12009994	JUNTA GOMA (GAES)	RUBBER SEAL	1	1	1	1						
25	12025278	FILTRO DE JUNTA N-3	JOINT FILTER N-3	2	2	2	2						
26	12024996	Te A 90º 3/4	T at 90º 3/4	2	2	2	2						
27	12024396	MANGUITO 3/4"	3/4" CONNECTION	5	5	5	5						
28	12023921	ELECTROVALVULA 3 VIAS	3 WAY SOLENOID VALVE	1	1	1	1				X		
29	12025161	ELECTROVALVULA SIMPLE	SIMPLE SOLENOID VALVE	1	1	1	1				X		
30	12023551	ELECTROVALVULA SIMPLE	SIMPLE SOLENOID VALVE	3	3	3	3				X		
31	12024622	BOBINADO EV SIMPLE	SIMPLE SOLENOID VALVE COIL	3	3	3	3				X		
32	12024526	EMPALME	FITTING	3	3	3	3						
33	12025062	RACOR PORTA FILTRO 3/4	RACOR FILTER HOLDER 3/4	1	1	1	1						
34	12024106	VENTILADOR 230V AC 1N 36KW	FAN 230V AC 1N 36KW			1					X		

ITEM	REFERENCIA REFERENCE	DENOMINACIÓN	DENOMINATION	LN/LR-11 TP	LN/LR-14 TP	LN/LR-18 TP	LN/LR-25 TP	LN-35 TP	LN-60 TP		RECOMMENDED	ELIMINADO ELIMINATED	INTRODUCIDO INTRODUCED
	12120261	INSTAL. ELECTRICA 10, 13, 18, 25 UL	ELECT. INSTALLATION 10, 13, 18, 25	1	1	1	1	1					
	12120257	INSTAL. ELECTRICA 35A, 60B UL	ELECT. INSTALLATION 35A, 60B UL						1				
	12121936	CABL. CALENTAMIENTO AF 10, 13 UL	HEATING WIRING AF 10, 13 UL	1	1								
	12121907	CABL. CALENTAMIENTO AF 18 KG UL	HEATING WIRING AF 18 KG UL			1							
	12121901	CABL. CALENTAMIENTO AF 25 KG UL	HEATING WIRING AF 25 KG UL				1						
	12121893	CABL. CALENTAMIENTO AF 35KG UL	HEATING WIRING AF 35 KG UL					1					
	12120269	CABLEADO RESISTENCIAS 60 B UL	HEATING WIRING AF 60 KG UL						1				
	12120274	CABLEADO PTC+R UL	PTC+R UL WIRING	1	1	1	1	1	1		X		
	12120263	CABLEADO VALVULA VACIADO UL	UL DRAIN VALVE WIRING	1	1	1	1	1	1				
	12121981	CABLEADO PUERTA UL	UL DOOR WIRING	1	1	1	1	1	1				
	12103432	CABL. CONECTOR MOTOR BAJAS	LOW SPEED ENGINE CONN. WIR.	1	1	1							
	12103432	CABL. CONECTOR MOTOR BAJAS	LOW SPEED ENGINE CONN. WIR.				1	1					
	12120265	CABL. CONECTOR MOTOR BAJAS	LOW SPEED ENGINE CONN. WIR.						1				
	12025067	CABLEADO ELECTR.VALV.VAPOR	STEAM VALVE ELETRIC WIRING	1	1	1	1	1	1			S MODELS	
	12043762	CABLEADO TIERRA EV UL	ELECTROVALVES GROUND WIRING					1					
	12136070	CABLEADO E.V. LAV 35 B UL	ELECTROVALVES WIRING 35					1					

	RECOMENDADOS / RECOMMENDED	LÁMINA / DRAWING		FAGOR

ITEM	REFERENCIA REFERENCE	DENOMINACIÓN	DENOMINATION	LN-11 TP	LN-14 TP	LN-18 TP	LN-25 TP	LN-35 TP	LN-60 TP			CONJUNTO FUNCIONAL / FUNCTIONAL PART
10	12113512	ADHESIVO FAGOR TP	FAGOR TP ADHESIVE	1	1	1	1	1	1			MUEBLE / CABINET
11	12113854	ADHESIVO ON/OFF FAGOR	FAGOR ON/OFF ADHESIVE	1	1	1	1	1	1			MUEBLE / CABINET
12	12096597	LIMITADOR DE SEGURIDAD	SAFETY THERMOSTAT	1	1	1	1	1	1			CUBA / TUB
8	12096226	RESISTENCIA 2000W 264MM	RESISTANCE 2000W 264MM	3								CUBA / TUB
8	12096023	RESISTENCIA 3000W 277MM	RESISTANCE 3000W 277MM		3							CUBA / TUB
8	12096051	RESISTENCIA 4000W 347MM	RESISTANCE 4000W 347MM			3						CUBA / TUB
8	12041359	RESISTENCIA 6.000W 509MM	RESISTANCE 6.000W 509MM				3					CUBA / TUB
8	12092855	RESISTENCIA 7.000W 562MM	RESISTANCE 7.000W 562MM					3				CUBA / TUB
8	12024721	RESISTENCIA 220-240 V	RESISTANCE 220-240 V						3			CUBA / TUB
10	12025036	CONJUNTO SONDA 64KOhmio NTC	PROBE 64KOhm NTC	1	1	1	1	1	1			CUBA / TUB
29	12023340	VALVULA VAPOR 1/2 50/60HZ	STEAM VALVE 1/2 50/60HZ	1	1	1	1					CUBA / TUB
29	12024331	VALVULA VAPOR 3/4" 60HZ.	STEAM VALVE 3/4 60HZ					1	1			CUBA / TUB
7	12023284	JUNTA PUERTA	DOOR SEAL	1	1	1	1					FR. CUBA / TUB FRONT
7	12048069	JUNTA PUERTA	DOOR SEAL					1	1			FR. CUBA / TUB FRONT
16	12119770	CIERRE COMPLETO 2015	COMPLETE LOCK 2015	1	1	1	1	1	1			FR. CUBA / TUB FRONT
1	12047485	MOTOR 230V AC 3 50Hz 0,75KW	ENGINE 230V AC 3 50Hz 0,75KW	1								TAMBOR / DRUM
1	12049374	MOTOR 230V AC 3 50Hz 1,1KW	ENGINE 230V AC 3 50Hz 1,1KW		1							TAMBOR / DRUM
1	12041186	MOTOR 230V AC 3 50Hz 1,5KW	ENGINE 230V AC 3 50Hz 1,5KW			1						TAMBOR / DRUM
1	12047170	MOTOR 230V AC 3 50Hz 2,2KW	ENGINE 230V AC 3 50Hz 2,2KW				1					TAMBOR / DRUM
1	12046367	MOTOR 230V AC 3 50Hz 3KW	ENGINE 230V AC 3 50Hz 3KW					1				TAMBOR / DRUM
1	12120185	MOTOR 5,5KW ARCELIK	ARCELIK 5,5KW ENGINE						1			TAMBOR / DRUM
6	12049376	CORREA POLY-V 8PJ1752	BELT POLY-V 8PJ1752	1	1							TAMBOR / DRUM
6	12041190	CORREA POLY-V 8PJ1895	BELT POLY-V 8PJ1895			1						TAMBOR / DRUM
6	12047172	CORREA POLY-V 12PJ1956	BELT POLY-V 12PJ1956				1					TAMBOR / DRUM
6	12046375	CORREA POLY-V 12PJ1992	BELT POLY-V 12PJ1992					1				TAMBOR / DRUM
6	12098498	CORREA POLY V PK 2680	BELT POLY-V PK 2680						1			TAMBOR / DRUM
3	12024404	VALVULA VACIADO	DRAINAGE VALVE	1	1	1	1	1	1			CUBETERA / TRAY
1	12119488	DISPLAY TOUCH PLUS	DISPLAY TOUCH PLUS	1	1	1	1	1	1			ELECTRICO / ELECTRIC
6	12120815	TARJETA PRINCIPAL TP (LIGHT)	MAIN BOARD TP (LIGHT)	1	1	1	1	1	1			ELECTRICO / ELECTRIC
8	12134049	VARIADOR DELTA PROGRAMADO	PROGRAMMED DELTA INVERTER	1								ELECTRICO / ELECTRIC
8	12134050	VARIADOR DELTA PROGRAMADO	PROGRAMMED DELTA INVERTER		1							ELECTRICO / ELECTRIC
8	12134051	VARIADOR DELTA PROGRAMADO	PROGRAMMED DELTA INVERTER			1						ELECTRICO / ELECTRIC
8	12134052	VARIADOR DELTA PROGRAMADO	PROGRAMMED DELTA INVERTER				1					ELECTRICO / ELECTRIC
8	12131878	VARIADOR DELTA PROGRAMADO	PROGRAMMED DELTA INVERTER					1				ELECTRICO / ELECTRIC
8	12134054	VARIADOR DELTA PROGR (460V)	PROGR. DELTA INVERTER (460V)						1			ELECTRICO / ELECTRIC
8	12134055	VARIADOR DELTA PROGR (230V)	PROGR. DELTA INVERTER (230V)						1			ELECTRICO / ELECTRIC
9	12111795	CONTACTOR 230V AC 20A 4via UL	230V AC 20A 4via UL CONTACTOR	2	2	2						ELECTRICO / ELECTRIC
9	12041014	CONTACTOR 230V AC 40A 4via UL	230V AC 40A 4via UL CONTACTOR				2	2	2			ELECTRICO / ELECTRIC
10	12024011	CONTACTOR 230V AC 16A 4via UL	230V AC 16A 4via UL CONTACTOR	1	1	1	1	1	1			ELECTRICO / ELECTRIC
11	12131303	MODULO PROCESADOR GRABADO	RECORDED PROCESSOR MODULE	1	1	1	1	1	1			ELECTRICO / ELECTRIC
12	12128262	SENSOR DE PRESION 50mbar	50mbar PRESSURE SENSOR	1	1	1	1	1				ELECTRICO / ELECTRIC
12	12128263	SENSOR DE PRESION 100mbar	100mbar PRESSURE SENSOR						1			ELECTRICO / ELECTRIC
13	12024696	MICRORRUPTOR PUERTA	DOOR MICROSWITCH	1	1	1	1	1	1			ELECTRICO / ELECTRIC
14	12116823	TRANSFORMADOR 1N 50W 240V/12V	1N 50W 240V/12V UL TRANSFORMER	1	1	1	1	1	1			ELECTRICO / ELECTRIC
17	12024628	INTERRUP. 63A 3VIA 2POS SECCI UL	63A 3WAY 2POS ISOLATOR SWITCH	1	1	1	1	1	1			ELECTRICO / ELECTRIC
28	12023921	ELECTROVALVULA 3 VIAS	3 WAY SOLENOID VALVE	1	1	1	1	1	1			ELECTRICO / ELECTRIC
29	12025161	ELECTROVALVULA SIMPLE	SIMPLE SOLENOID VALVE	1	1	1	1	1	1			ELECTRICO / ELECTRIC
30	12023794	ELECTROVALVULA 2 VIAS	2 WAY SOLENOID VALVE	2	2	2						ELECTRICO / ELECTRIC
30	12023551	ELECTROVALVULA SIMPLE	SIMPLE SOLENOID VALVE				3	3	3			ELECTRICO / ELECTRIC
31	12024622	BOBINADO EV SIMPLE	SIMPLE SOLENOID VALVE COIL				3	3	3			ELECTRICO / ELECTRIC
34	12024106	VENTILADOR 230V AC 1N 36KW	FAN 230V AC 1N 36KW						1			ELECTRICO / ELECTRIC
	12120274	CABLEADO PTC+R UL	PTC+R UL WIRING	1	1	1	1	1	1			VARIOS / VARIOUS

	RECOMENDADOS / RECOMMENDED	LÁMINA / DRAWING		FAGOR

ITEM	REFERENCIA REFERENCE	DENOMINACIÓN	DENOMINATION	LR-11 TP	LR-14 TP	LR-18 TP	LR-25 TP					CONJUNTO FUNCIONAL / FUNCTIONAL PART
10	12113512	ADHESIVO FAGOR TP	FAGOR TP ADHESIVE	1	1	1	1					MUEBLE / CABINET
11	12113854	ADHESIVO ON/OFF FAGOR	FAGOR ON/OFF ADHESIVE	1	1	1	1					MUEBLE / CABINET
12	12096597	LIMITADOR DE SEGURIDAD	SAFETY THERMOSTAT	1	1	1	1					CUBA / TUB
8	12096226	RESISTENCIA 2000W 264MM	RESISTANCE 2000W 264MM	3								CUBA / TUB
8	12096023	RESISTENCIA 3000W 277MM	RESISTANCE 3000W 277MM		3							CUBA / TUB
8	12096051	RESISTENCIA 4000W 347MM	RESISTANCE 4000W 347MM			3						CUBA / TUB
8	12041359	RESISTENCIA 6.000W 509MM	RESISTANCE 6.000W 509MM				3					CUBA / TUB
10	12025036	CONJUNTO SONDA 64KOhmio NTC	PROBE 64KOhm NTC	1	1	1	1					CUBA / TUB
29	12023340	VALVULA VAPOR 1/2 50/60HZ	STEAM VALVE 1/2 50/60HZ	1	1	1	1					CUBA / TUB
7	12023284	JUNTA PUERTA	DOOR SEAL	1	1	1	1					FR. CUBA / TUB FRONT
16	12119770	CIERRE COMPLETO 2015	COMPLETE LOCK 2015	1	1	1	1					FR. CUBA / TUB FRONT
1	12047485	MOTOR 230V AC 3 50Hz 0,75KW	ENGINE 230V AC 3 50Hz 0,75KW	1								TAMBOR / DRUM
1	12049374	MOTOR 230V AC 3 50Hz 1,1KW	ENGINE 230V AC 3 50Hz 1,1KW		1							TAMBOR / DRUM
1	12041186	MOTOR 230V AC 3 50Hz 1,5KW	ENGINE 230V AC 3 50Hz 1,5KW			1						TAMBOR / DRUM
1	12047170	MOTOR 230V AC 3 50Hz 2,2KW	ENGINE 230V AC 3 50Hz 2,2KW				1					TAMBOR / DRUM
6	12049376	CORREA POLY-V 8PJ1752	BELT POLY-V 8PJ1752	1	1							TAMBOR / DRUM
6	12041190	CORREA POLY-V 8PJ1895	BELT POLY-V 8PJ1895			1						TAMBOR / DRUM
6	12047172	CORREA POLY-V 12PJ1956	BELT POLY-V 12PJ1956				1					TAMBOR / DRUM
3	12024404	VALVULA VACIADO	DRAINAGE VALVE	1	1	1	1					CUBETERA / TRAY
1	12119488	DISPLAY TOUCH PLUS	DISPLAY TOUCH PLUS	1	1	1	1					ELECTRICO / ELECTRIC
6	12120815	TARJETA PRINCIPAL TP (LIGHT)	MAIN BOARD TP (LIGHT)	1	1	1	1					ELECTRICO / ELECTRIC
8	12133739	VARIADOR DELTA PROGRAMADO	PROGRAMMED DELTA INVERTER	1								ELECTRICO / ELECTRIC
8	12133740	VARIADOR DELTA PROGRAMADO	PROGRAMMED DELTA INVERTER		1							ELECTRICO / ELECTRIC
8	12133741	VARIADOR DELTA PROGRAMADO	PROGRAMMED DELTA INVERTER			1						ELECTRICO / ELECTRIC
8	12133742	VARIADOR DELTA PROGRAMADO	PROGRAMMED DELTA INVERTER				1					ELECTRICO / ELECTRIC
9	12111795	CONTACTOR 230V AC 20A 4via UL	230V AC 20A 4via UL CONTACTOR	2	2	2						ELECTRICO / ELECTRIC
9	12041014	CONTACTOR 230V AC 40A 4via UL	230V AC 40A 4via UL CONTACTOR				2					ELECTRICO / ELECTRIC
10	12024011	CONTACTOR 230V AC 16A 4via UL	230V AC 16A 4via UL CONTACTOR	1	1	1	1					ELECTRICO / ELECTRIC
11	12131303	MODULO PROCESADOR GRABADO	RECORDED PROCESSOR MODULE	1	1	1	1					ELECTRICO / ELECTRIC
12	12128262	SENSOR DE PRESION 50mbar	50mbar PRESSURE SENSOR	1	1	1	1					ELECTRICO / ELECTRIC
13	12024696	MICRORRUPTOR PUERTA	DOOR MICROSWITCH	1	1	1	1					ELECTRICO / ELECTRIC
14	12116823	TRANSFORMADOR 1N 50W 240V/12V	1N 50W 240V/12V UL TRANSFORMER	1	1	1	1					ELECTRICO / ELECTRIC
17	12024628	INTERRUP. 63A 3VIA 2POS SECCI UL	63A 3WAY 2POS ISOLATOR SWITCH	1	1	1	1					ELECTRICO / ELECTRIC
28	12023921	ELECTROVALVULA 3 VIAS	3 WAY SOLENOID VALVE	1	1	1	1					ELECTRICO / ELECTRIC
29	12025161	ELECTROVALVULA SIMPLE	SIMPLE SOLENOID VALVE	1	1	1	1					ELECTRICO / ELECTRIC
8	12023794	ELECTROVALVULA 2 VIAS	2 WAY SOLENOID VALVE	2	2	2						ELECTRICO / ELECTRIC
30	12023551	ELECTROVALVULA SIMPLE	SIMPLE SOLENOID VALVE				3					ELECTRICO / ELECTRIC
31	12024622	BOBINADO EV SIMPLE	SIMPLE SOLENOID VALVE COIL				3					ELECTRICO / ELECTRIC
	12120274	CABLEADO PTC+R UL	PTC+R UL WIRING	1	1	1	1					VARIOS / VARIOUS

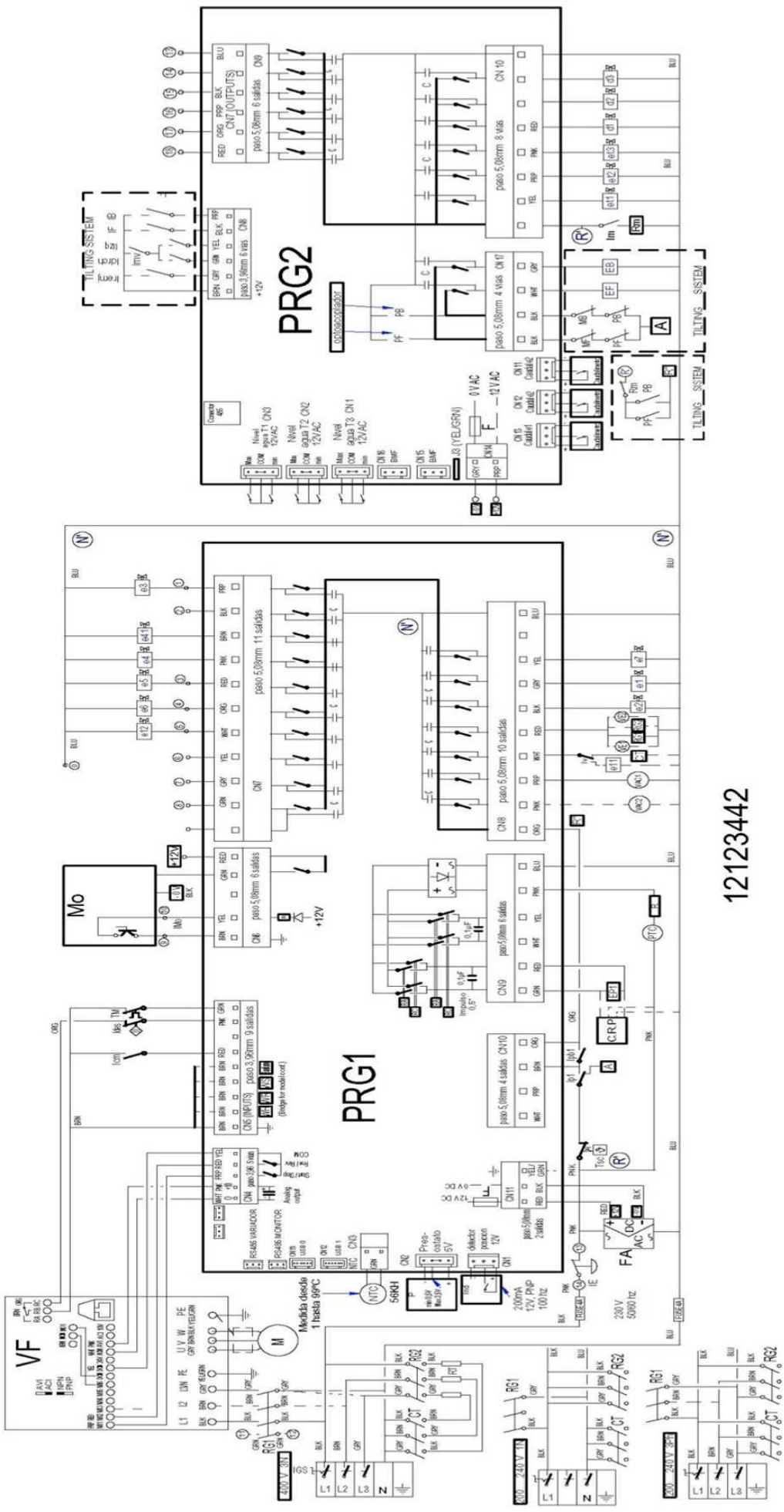

Drawing Nr.	Signature	Date	ESQUEMA TEORICO / THEORIC. SCHEME	Sheet
	Iban R.	dic-15	LN_LR-11-14-18-25-35-60 TP	13

FAGOR

Simb / LENG		ESPAÑOL	ENGLISH	FRANÇAIS	DEUTSCH	ITALIANO
CT1, CT2	=	Contactor Calentamiento	Heating Contactor	Contacteur Chauffe	Heizschütz	Contatore Riscaldamento
CVF	=	Contactor Variador	Converter Contactor	Contacteur Convertisseur	Schütz Frequenzumwandler	Contactore Convertitore
5	=	Dosificador Neutralizante.	Neutralizer feeder	Doseur Neutralisant	Dosiervorrichtung Neutralspülmittel	Dosatore Neutralizzante
6	=	Dosificador jabon liquido.	Liquid soap feeder	Doseur lessive liquide	Dosiervorrichtung Flüssigseife	Dosatore sapone liquido
7	=	Dosificador aditivos.	Additive feeder	Doseur additifs	Dosiervorrichtung Zusatzmittel	Dosatore additivi
D.T.	=	Display/Teclado	Display/Keyboard	Écran/Clavier	Display/Tastatur	Display/Tastiera
e1	=	Electro válvula agua Fría.	Cold water electrically operated valve	Électrovanne eau Froide	Elektroventil Kaltwasser	Elettrovalvola acqua Fredda
e2	=	Electro válvula agua Caliente	Hot water electrically operated valve	Électrovanne eau Chaude	Elektroventil Warmwasser	Elettrovalvola acqua Calda
e3	=	Electro válvula Prelavado.	Pre-wash electrically operated valve	Électrovanne Prélavage	Elektroventil Vorwaschen	Elettrovalvola Prelavaggio
e4, e41	=	Electro válvula Lavado.	Wash electrically operated valve	Électrovanne Lavage	Elektroventil Hauptwaschgang	Elettrovalvola Lavaggio
e5	=	Electro válvula Lejia.	Bleach electrically operated valve.	Électrovanne Eau de Javel	Elektroventil Bleiche	Elettrovalvola Candeggina
e6	=	Electro válvula Suavizante.	Fabric softener electrically operated valve	Électrovanne Assouplissant	Elektroventil Weichspüler	Elettrovalvola Ammorbidente
e7	=	Electro válvula agua Descalcificada	Delimed water electrically operated valve	Électrovanne eau Adoucie	Elektroventil entkalktes Wasser	Elettrovalvola acqua Decalcificata
e11	=	Electro válvula Vapor.	Steam electrically operated valve	Électrovanne Vapeur	Elektroventil Dampf	Equilibrado Vapore
EB	=	Electro válvula de aire Basculacion Trasera	Air Valve of the Back Tilting	Soupape à air de l'inclinaison arrière	Luftventil des rückseitigen Kippens	Valvola per aria di inclinazione posteriore
EF	=	Electro válvula de aire Basculacion Frontal	Air Valve of the Front Tilting	Soupape à air de l'inclinaison avant	Luftventil des vorderen Kippens	Valvola per aria di inclinazione anteriore
EP	=	Electroimán de Puerta.	Door electric magnet	Électro-aimant de Porte	Elektromagnet Gerätetür	Elettromagnete Porta
FI	=	Filtro de Interferencias.	Interference filter	Filtre Anti-parasites	Störungsfilter	Filtro Interferenze
F	=	Fusible.	Fuse	Fusible	Sicherung	Fusibile
IE	=	Pulsador Parada de emergencia.	Emergency stop push button	Bouton-poussoir Arrêt d'urgence	Not-Aus-Taster	Pulsante Arresto di emergenza
IG	=	Interruptor general.	General switch	Interrupteur général	Hauptschalter	Interruttore generale
IGS	=	Interruptor General de seguridad.	General safety switch	interrupteur Général de sécurité	Sicherheitshauptschalter	Interruttore Generale di sicurezza
IB	=	Interruptor Basculacion Trasero del Mando.	Back Tilting Switch of Control	Commutateur de inclinaison arrière de commande	Rückseitiger kippenschalter der Steuerung	Interruttore di inclinazione posteriore di controllo
Idrch	=	Interruptor Rotacion a Derechas del Mando	Switch of Spins to the Right of Control	Commutateur des rotations à la droite de la comm	Schalter von Drehbeschleunigungen auf der rechten Seite der Steuerung	Interruttore delle rotazioni alla destra di controllo
Ides	=	Interruptor de desequilibrio.	Unbalance switch	Interrupteur de balourd	Ungleichgewichtsschalter	Interruttore di squilibrio
IF	=	Interruptor Basculacion Frontal Mando.	Front Tilting Switch of Control	Front Tilting Switch of Contrôle	Vorderer kippenschalter der Steuerung	Interruttore di inclinazione anteriore di controllo
Iizq	=	Interruptor Rotacion a Izquierdas Mando	Switch of Left Spin of Control	Commutateur de rotation gauche de commande	Schalter der linken Drehbeschleunigung der Steuerung	Interruttore della rotazione di sinistra di controllo
Im	=	Interruptor Movimiento / parada / Mando	Stopped Motion Switch	Détecteur D'arrêt		
IMo	=	Interruptor Monedero.	Coin slote switch	Interrupteur Monnayeur	Münzschalter	Interruttore Portamonete
Ip	=	Interruptor puerta Cerrada.	Closed door switch	Interrupteur porte Fermée	Schalter Tür geschlossen	Interruttore porta Chiusa
Ipb	=	Interruptor puerta bloqueada.	Door lock switch	Interrupteur porte verrouillée	Schalter Tür verriegelt	Interruttore porta bloccata
Iremj	=	Interruptor de Remojo del Mando	Soaking Switch of Control	Commutateur de trempage de commande	Tränkender Schalter der Steuerung	Interruttore d'inzuppamento di controllo
Isc	=	Interruptor seguridad Temperatura	Hi-limit Thermostat	Thermostat Limiteur	Grenzthermostat	Termostato Limitatore
Iv	=	Interruptor Vapor	Steam Switch	Commutateur de vapeur	Dampf-Schalter	Interruttore del vapore
M	=	Motor.	Motor	Moteur	Motor	Motore
MB	=	Interruptor seguridad Basculacion Trasero.	Back Tilting Hi-limit Switch			
MF	=	Interruptor seguridad Basculacion Frontal.	Front Tilting Hi-limit Switch			
Mo	=	Monedero.	Coin slot	Monnayeur	Münzvorrichtung	Portamonete
NTC	=	Sensor temperatura.	Temperature sensor	Capteur température	Temperatursensor	Sensore temperatura
PB	=	Presostato Basculacion Trasero	Back Tilting Air Presure Low-Limit			
PF	=	Presostato Basculacion Frontal	Front Tilting Air Presure Low-Limit			
P, P2		Presostato Nivel de agua	Water Level Switch			
PRG	=	Circuito Programador.	Programmer Circuit	Circuit Programmateur	Kreislauf Programmiervorrichtung	Circuito Programmatore
PTC	=	PTC	PTC	PTC	PTC	PTC
Rb	=	Rele Basculacion Trasero	Back Tilting Relay			
Rf	=	Rele Basculacion Frontal	Front Tilting Relay			
Rm	=	Rele movimiento / Parada	Stopped Motion Relay	Relais Détecteur D'arrêt		
Rp	=	Rele Puerta	Closed door Relay	Relais porte Fermée		Rele porta Chiusa
Rpb	=	Rele Puerta Bloqueada	Door lock Relay	Relais porte verrouillée		Rele porta bloccata
RT	=	Resistencia Calentamiento.	Heating Resistors	Résistance Chauffe	Widerstand Aufheizung	Resistenza Riscaldamento
TL	=	Limitador Temperatura	Hi-limit Thermostat	Thermostat Limiteur	Grenzthermostat	Termostato Limitatore
Tm	=	Térmico de Motor.	Motor hot-wire	Thermique du Moteur	Motorwärmeschalter	Termico del Motore
Trf	=	Transformador	Transformer	Transformateur	Transformator	Trasformatore
Trf s/N	=	Transformador Versión sin Neutro.	Transformer Version without Neutral	Transformateur Version sans Neutre	Transformator Modell ohne Neutralstellung	Trasformatore Versione senza Neutro
VAC, VAC2	=	Válvula Vaciado	Emptying valve	Vanne Vidange	Ablassventil	Valvola Scarico
VE, VE1, VE2	=	Ventilador.	Fan	Ventilateur	Ventilator	Ventola
VF	=	Convertidor de Frecuencia.	Frequency converter	Convertisseur de Fréquence	Frequenzumwandler	Convertitore di Frequenza
VM	=	Ventilador Motor.	Fan motor	Ventilateur Moteur	Ventilator Motor	Ventola Motore
1...8	=	Puntos conexión dosificadores.	Feeder connection points	Points raccordement doseurs	Anschlussstellen Dosiervorrichtungen	Punti connessione dosatori
9 - 10	=	Entrada de la central de pago 24V =	Central Entrance of payment			
11 - 12	=	Salida hacia la central de pago	Exit towards Central of Payment			
COLOR	=	COLORES	COLOUR	COULEURS	FARBEN	COLORE
a	=	Azul	Blue	Bleu	Blau	Blu
am	=	Amarillo	Yellow	Jaune	Gelb	Giallo
am/ve	=	Amarillo/verde	Yellow / green	Jaune / vert	Gelb/grün	Giallo/verde
b	=	Blanco	White	Blanc	Weiß	Bianco
g	=	Gris	Grey	Gris	Grau	Grigio
m	=	Marrón	Brown	Marron	Braun	Marrone
n	=	Negro	Black	Noir	Schwarz	Nero
na	=	Naranja	Orange	Orange	Orange	Arancio
r	=	Rojo	Red	Rouge	Rot	Rosso
rs	=	Rosa	Pink	Rose	Rosa	Roseo
ve	=	Verde	Green	Vert	Grün	Verde
vi	=	Violeta	Purple	Violet	Violett	Viola
						P623014000