FAGOR

FAGOR INDUSTRIAL

DESPIECE TÉCNICO
TECHNICAL PARTS

Lavavajillas

Dishwasher

MODELOS

CO-352 COLD / DD / B / B DD
CO-402 COLD / DD / B / B DD

Diciembre 2014 December

Revisado Mayo 2015 May Revised



Together we evolve

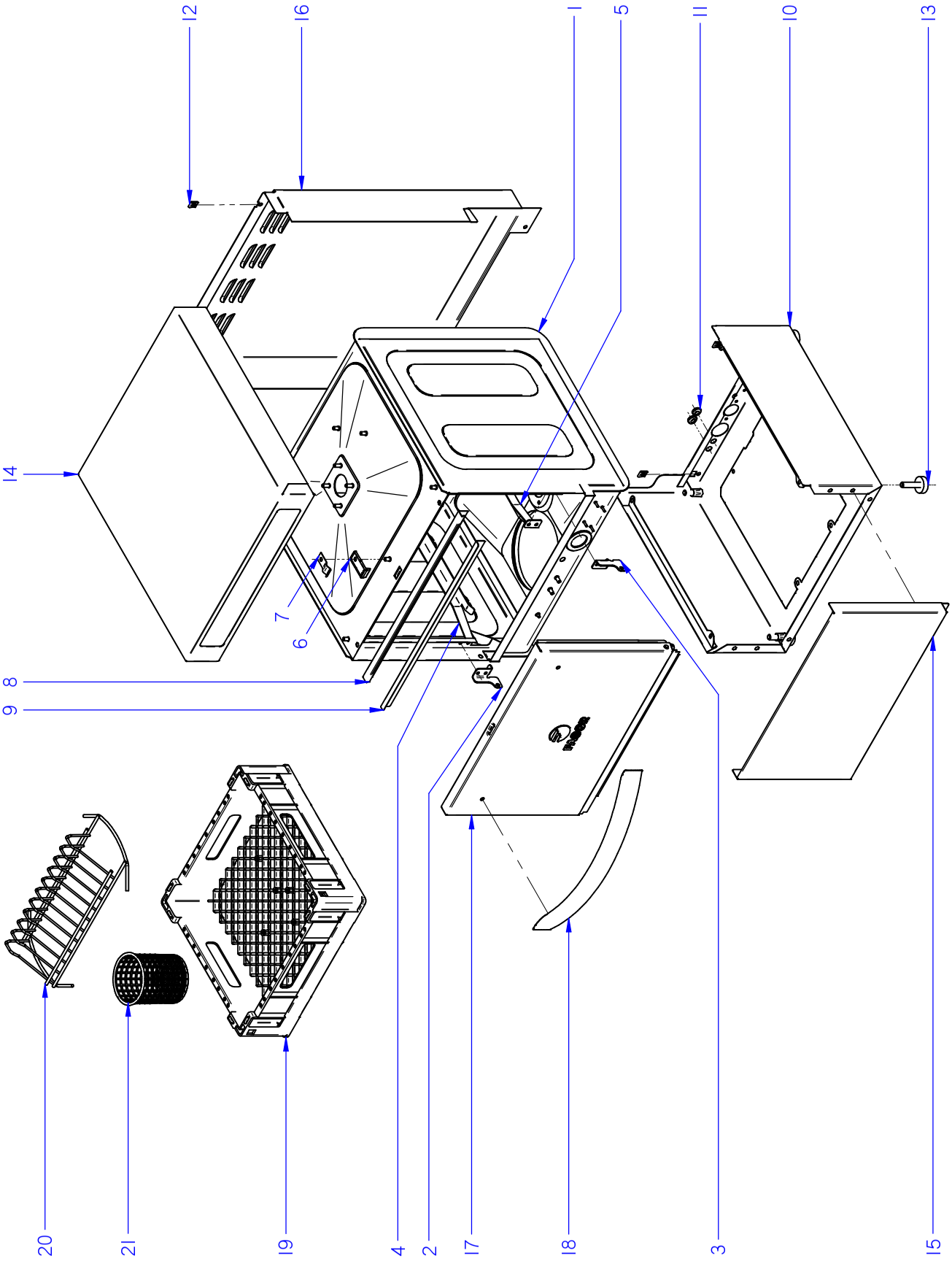

ITEM MARCADO EN COLOR = REPUESTO RECOMENDADO
COLOURED ITEM = RECOMMENDED SPARE PART

N plano / Drawing N.	Firma / Signature	Fecha / Date	Aparato / Appliance	Lamina / Sheet	
C-3329	Iban R.	2014-12	ARMAZON / FRAME CO-352-402 COLD GLASSWASHER	1	Fagor Industrial S.Coop. Onate

ZONA / ZONE	ARMAZON / FRAME			LÁMINA / DRAWING	C-3329	FAGOR

ITEM	REFERENCIA REFERENCE	DENOMINACIÓN	DENOMINATION	CO-352 COLD	CO-402 COLD						RECOMMENDED			NOTAS / NOTES
1	12047953	CUBA SOLDADA CO-350	WELDED TUB CO-350	1	_									
1	12101982	CUBA SOLDADA CO-400	WELDED TUB CO-400	_	1									
1	12113475	CUBA SOLDADA CO-400 SOFT	WELDED TUB CO-400 SOFT	_	_									
2	12048627	SOPORTE PUERTA IZQUIERDO	LEFT DOOR SUPPORT	1	1									
3	12048774	SOPORTE PUERTA DERECHO	RIGHT DOOR SUPPORT	1	1									
4	12049133	GUIA CESTILLO IZQU CO-350	LEFT BASKET GUIDE CO-350	1	_									
4	12102193	GUIA CESTILLO IZQU CO-400	LEFT BASKET GUIDE CO-400	_	1									
5	12049135	GUIA CESTILLO DCHA CO-350	RIGHT BASKET GUIDE CO-350	1	_									
5	12102194	GUIA CESTILLO DCHA CO-400	RIGHT BASKET GUIDE CO-400	_	1									
6	12087183	MACHO CIERRE PUERTA	DOOR LOCK	1	1									
7	12087186	FLEJE_CIERRE_PUERTA	DOOR LOCK SPRING	1	1									
8	12087200	PERFIL VAHOS CO-350	STEAM SEAL CO-350	1	_									
8	12101867	PERFIL VAHOS CO-400	STEAM SEAL CO-400	_	1									
9	12102061	PERFIL JUNTA VAHOS CO-350	STEAM PROFILE SEAL CO-350	1	_									
9	12102035	PERFIL JUNTA VAHOS CO-400	STEAM PROFILE SEAL CO-400	_	1									
10	12049271	BASE SOLDADA CO-350	WELDED BASE CO-350	1	_									
10	12101978	BASE SOLDADA CO-400	WELDED BASE CO-400	_	1									
11	12112707	PASAMUROS 18x8x6 CHAPA E=1	1MM SHEET BUSHING 18x8x6	2	2									
12	12087215	TUERCA RÁPIDA M5	FAST NUT M5	4	4									
13	12024163	PATA REGULABLE	REGULABLE FOOT	4	4									
14	12116665	PANEL SUPERIOR 352	TOP PANEL 352	1	_									
14	12118815	PANEL SUPERIOR 402	TOP PANEL 402	_	1									
15	12048562	PANEL FRONTAL CO-350	FRONT PANEL CO-350	1	_									
15	12101870	PANEL FRONTAL CO-400	FRONT PANEL CO-400	_	1									
16	12048645	PANEL POSTERIOR CO-350	REAR PANEL CO-350	1	_									
16	12101871	PANEL POSTERIOR CO-400	REAR PANEL CO-400	_	1									
17	12049066	PUERTA SOLDADA CO-350	WELDED DOOR CO-350	1	_									
17	12102007	PUERTA SOLDADA CO-400	WELDED DOOR CO-400	_	1									
18	12049468	ASA LAVAVASOS	GLASSWASHER HANDLE	1	1									
19	12024550	CESTILLO 350	BASKET 350	2	_									
19	12025069	CESTILLO 400	BASKET 400	_	2									

ZONA / ZONE	ARMAZON / FRAME	LÁMINA / DRAWING	C-3329	FAGOR

ITEM	REFERENCIA REFERENCE	DENOMINACIÓN	DENOMINATION	CO-352 COLD	CO-402 COLD						RECOMMENDED			NOTAS / NOTES
20	12024286	SUPLEMENTO PLATILLOS 350	SMALL DISHES SUPPLEMENT 350	1	_									
20	12025030	SUPLEMENTO PLATILLOS 400	SMALL DISHES SUPPLEMENT 400	_	1									
21	12025242	CESTILLO PORTACUBIERTOS	CUTLERY BASKET	1	1									

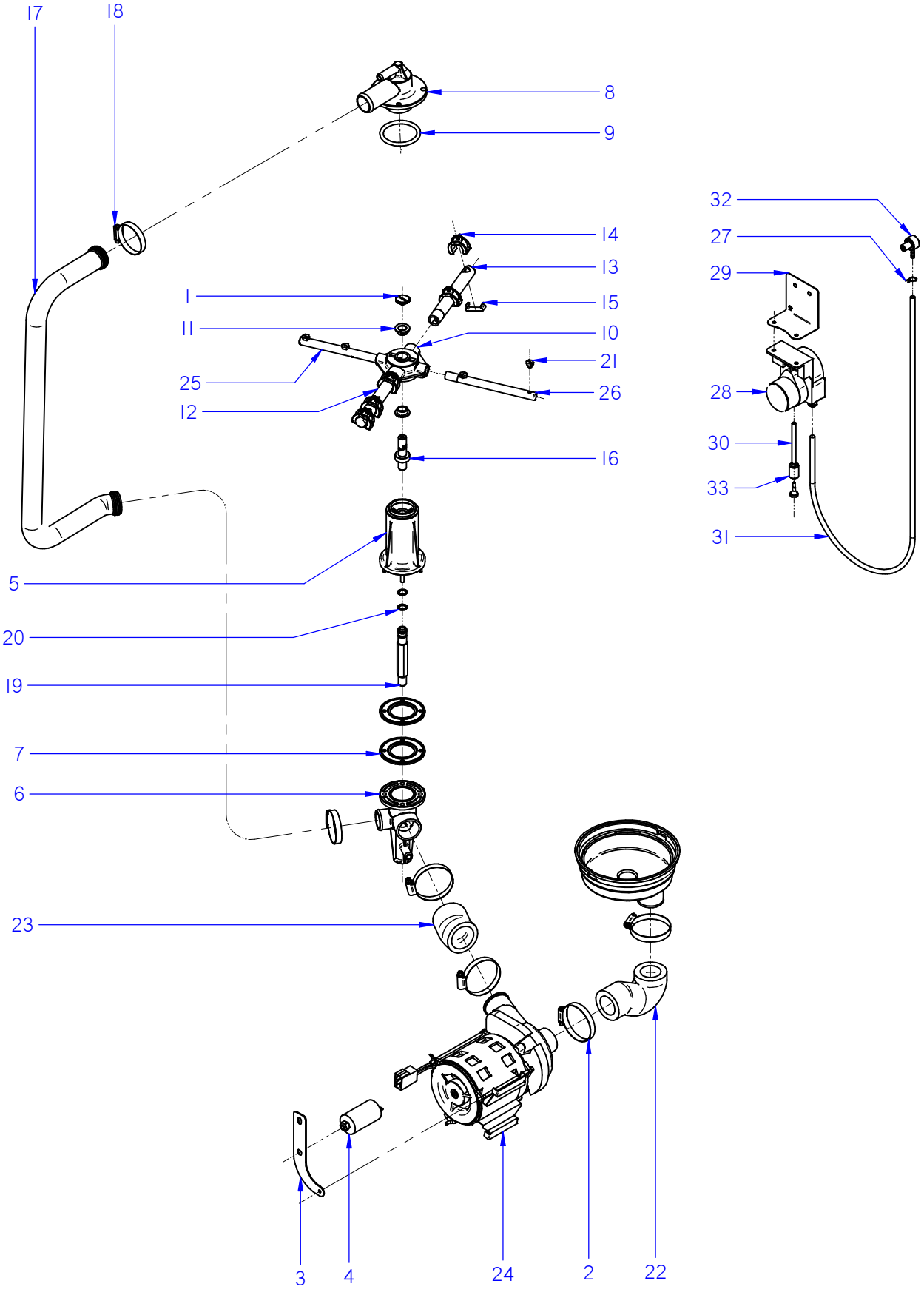

ITEM MARCADO EN COLOR = REPUESTO RECOMENDADO
COLOURED ITEM = RECOMMENDED SPARE PART

N plano / Drawing N.	Firma / Signature	Fecha / Date	Aparato / Appliance PARTE FUNCIONAL LAVADO / WASHING FUNCTIONAL PART	Lamina / Sheet	
C-3330	Iban R.	12/2014	CO-352-402 COLD / DD GLASSWASHER	2	Fagor Industrial S.Coop. FAGOR Oñate

ZONA / ZONE	PARTE FUNCIONAL LAVADO / WASHING FUNCTIONAL PART	LÁMINA / DRAWING	C-3330	FAGOR

ITEM	REFERENCIA REFERENCE	DENOMINACIÓN	DENOMINATION	CO-352 COLD	CO-402 COLD						RECOMMENDED	ELIMINADO ELIMINATED	INTRODUCIDO INTRODUCED	NOTAS / NOTES
1	12009829	TORNILLO ESPECIAL M.5X0.8	SPECIAL SCREW M.5X0.8	1	1									
2	12009962	ABRAZADERA 40-60	40-60 CLAMP	4	4									
3	12111848	SOPORTE BOMBA LAVADO 350	WASHIG PUMP SUPPORT 350	1	_									
3	12111106	SOPORTE BOMBA LAVADO 400	WASHIG PUMP SUPPORT 400	_	1									
4	12024346	CONDENSADOR 10MF	10MF CAPACITOR	1	1						X			
5	12112971	SOP. DISTRIBUIDOR INFERIOR	LOWER SPRY-ARM SUPPORT	1	1									
6	12024703	PASAMUROS CESTO CUADRADO	SQUARE BASKET BUSHING	1	1									
7	12023533	JUNTA ESTANQUEIDAD	SEALING GASKET	2	2									
8	12113028	SOP. DISTRIBUIDOR SUPERIOR	UPPER SPRY-ARM SUPPORT	1	1									
9	12010079	JUNTA TOR.50.17X60.83X5.3	O-RING 50.17X60.83X5.3	1	1									
10	12025216	CRUCETA	CROSSBRACE	2	2									
11	12024086	CASQUILLO CRUCETA	CROSSBRACE BUSHING	2	2									
12	12019827	RAMA LAVADO A 350	WASHING BRANCH A 350	2	_									
12	12022381	RAMA LAVADO A 400	WASHING BRANCH A 400	_	2									
13	12019857	RAMA LAVADO B	WASHING BRANCH B	2	_									
13	12022382	RAMA LAVADO B 400	WASHING BRANCH B 400	_	2									
14	12023732	TOBERA LAVADO	WASHING NOZZLE	10	12									
15	12023710	ENGANCHE TOBERA LAVADO	WASHING NOZZLE ENGAGE	10	12									
16	12025114	EJE	SHAFT	2	2									
17	12024059	ARBOL LAVADO 350	WASHING TREE 350	1	_									
17	12025154	ARBOL LAVADO 400	WASHING TREE 400	_	1									
18	12009986	ABRAZADERA 32-50L	32-50L CLAMP	2	2									
19	12023801	EMPALME ACLARADO	RINSE CONNECTION	1	1									
20	12009911	JUNTA TO.10.82X14.38X1.78	O-RING 10.82X14.38X1.78	2	2									
21	12024252	TOBERA ACLARADO 350	RINSING NOZZLE	8	10									
22	12023670	CODO ASPIRACION	SUCTION ELBOW	1	1									
23	12023607	CODO IMPULSION	EXPULSIOIN ELBOW	1	1									
24	12023429	BOMBA LAVADO 50/60HZ 260KW	WASHING PUMP 50/60HZ 260KW	1	1						X			
25	12020475	RAMA ACLARADO A 350	RINSING BRANCH A 350	1	_									
25	12022613	RAMA ACLARADO A 400	RINSING BRANCH A 400	_	1									
26	12020476	RAMA ACLARADO B 350	RINSING BRANCH B 350	1	_									
26	12022710	RAMA ACLARADO B 400	RINSING BRANCH B 400	_	1									

ZONA / ZONE	PARTE FUNCIONAL LAVADO / WASHING FUNCTIONAL PART	LÁMINA / DRAWING	C-3330	FAGOR

ITEM	REFERENCIA REFERENCE	DENOMINACIÓN	DENOMINATION	CO-352 COLD	CO-402 COLD						RECOMMENDED	ELIMINADO ELIMINATED	INTRODUCIDO INTRODUCED	NOTAS / NOTES
	19022347	**KIT DOSIFICADOR DETERGENTE EVO**	**DETERGENT DISPENSER KIT EVO**											
27	12023707	BRIDA ELASTICA TUBO	ELASTIC CLAMP FOR PIPES	_	1									
28	12024216	DOSIFIC. DGTE REGULABLE G300	REGUL. DETERG. DISPENSER G300	_	1						X			
29	12049139	SOPORT. DOSIFICADORES	DISPENSERS SUPPORT	_	1									
30	12024139	CONDUCTO ASPIRACIÓN AZKOY CO	AZKOY SUCTION PIPE	_	1									
31	11000079	CONDUCTO DOSIF. TRANSP 6X4	DISPENSER TRANSPARENT PIPE	_	1									
32	12024531	INYECTOR DETERGENTE INOX	DETERGENT INJECTOR	_	1									
33	12024353	PESO FILTRO	FILTER'S WEIGHT	_	1									

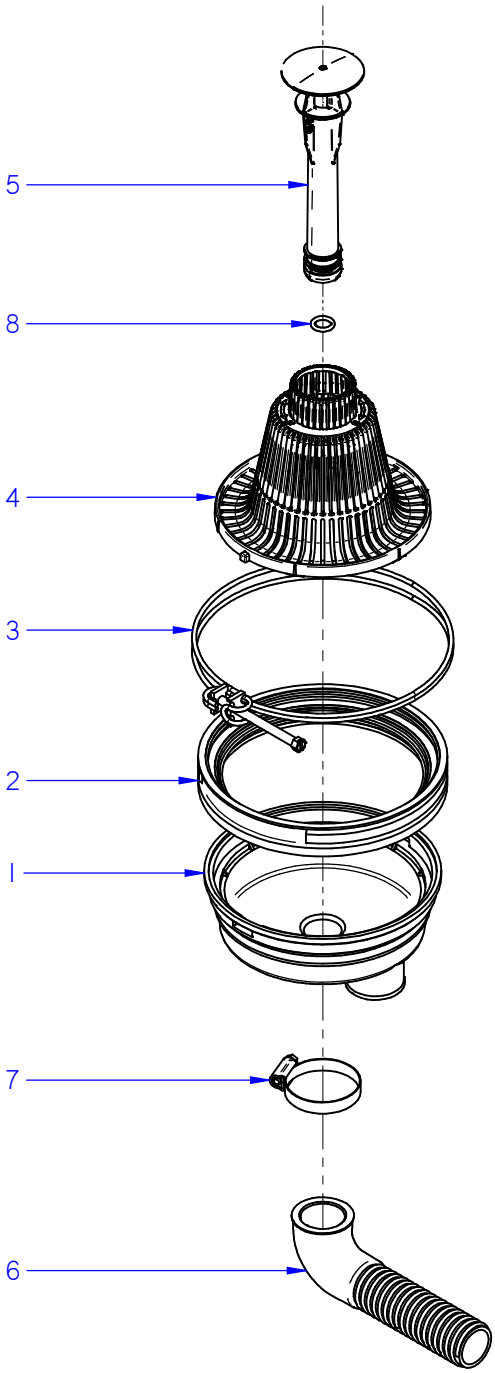

ITEM MARCADO EN COLOR = REPUESTO RECOMENDADO
COLOURED ITEM = RECOMMENDED SPARE PART

N plano / Drawing N.	Firma / Signature	Fecha / Date	Aparato / Appliance PARTE FUNCIONAL LAVADO / WASHING FUNCTIONAL PART	Lamina / Sheet	
C-3331	Iban R.	12-2014	CO-352-402 COLD GLASSWASHER	3	Fagor Industrial S.Coop. FAGOR Onate

ZONA / ZONE	DESAGÜE / DRAIN	LÁMINA / DRAWING	C-3331	FAGOR

ITEM	REFERENCIA REFERENCE	DENOMINACIÓN	DENOMINATION	CO-352-402 COLD							RECOMMENDED	ELIMINADO ELIMINATED	INTRODUCIDO INTRODUCED	NOTAS / NOTES
1	12112942	CUBETA CO-400	PAIL CO-400	1										
2	12024113	JUNTA CUBETA	PAIL SEAL	1										
3	12025195	ABRAZADERA CUBETA COMPLET	PAIL COMPLETE CLAMP	1										
4	12092003	FILTRO CO-400	CO-400 FILTER	1										
5	12120614	ALIVIADERO CO-400	CO-400 SPILLWAY	1										
6	12024114	MANGUERA DESAGUE	DRAINING PIPE	1							X			
7	12009986	ABRAZADERA 32-50L	32-50L CLAMP	1										
8	12104085	JUNTA TORICA ALIVIADERO	SPILLWAY O-RING	1										
	19013376	**KIT BOMBA DE DESAGÜE**	**DRAINING PUMP KIT**											

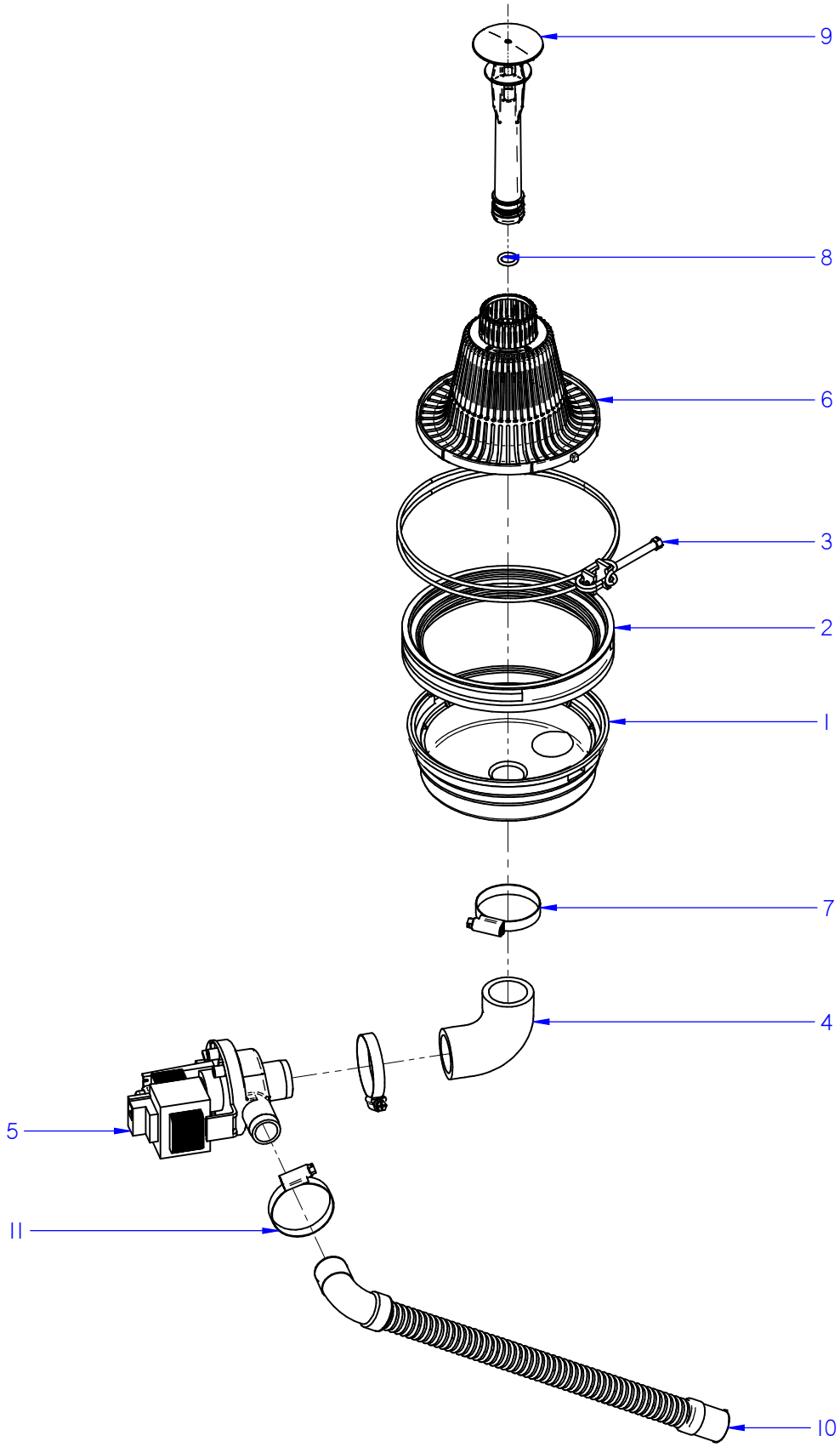

ITEM MARCADO EN COLOR = REPUESTO RECOMENDADO
COLOURED ITEM = RECOMMENDED SPARE PART

N plano / Drawing N.	Firma / Signature	Fecha / Date	Aparato / Appliance PARTE FUNCIONAL LAVADO / WASHING FUNCTIONAL PART	Lamina / Sheet	
C-3332	Iban R.	12-2014	CO-352-402 COLD B GLASSWASHER	4	Fagor Industrial S.Coop. FAGOR Onate

ZONA / ZONE	DESAGÜE / DRAIN	LÁMINA / DRAWING	C-3332	FAGOR

ITEM	REFERENCIA REFERENCE	DENOMINACIÓN	DENOMINATION	CO-352-402 B							RECOMMENDED	ELIMINADO ELIMINATED	INTRODUCIDO INTRODUCED	NOTAS / NOTES
1	12112942	CUBETA CO-400	PAIL CO-400	1										
2	12024113	JUNTA CUBETA	PAIL SEAL	1										
3	12025195	ABRAZADERA CUBETA COMPLET	PAIL COMPLETE CLAMP	1										
4	12094016	CONDUCTO ASPIRACION	SUCTION PIPE	1										
5	12094265	BOMBA DESAGÜE 1N 50/60Hz 38W	DRAINING PUMP 1N 50/60Hz 38W	1							X			
6	12092003	FILTRO CO-400	CO-400 FILTER	1										
7	12009986	ABRAZADERA 32-50L	32-50L CLAMP	2										
8	12104085	JUNTA TORICA ALIVIADERO	SPILLWAY O-RING	1										
9	12120615	ALIVIADERO CO-400 B	CO-400 B SPILLWAY	1										
10	12023666	MANGUERA DESAGÜE	DRAINING PIPE	1							X			
11	12049666	ABRAZADERA ELASTICA 38,5-43	ELASTIC CLAMP 38,5-43	1										

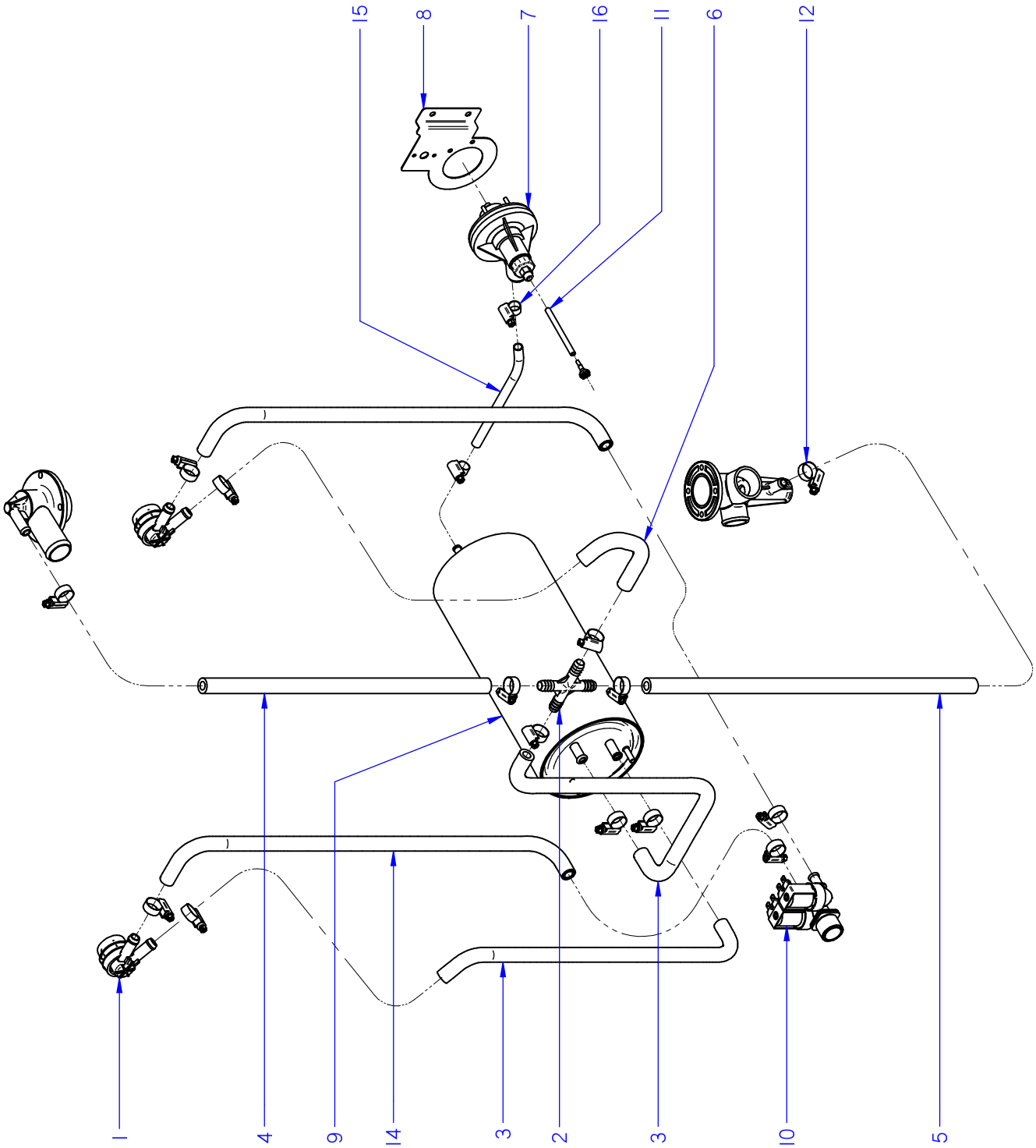

ITEM MARCADO EN COLOR = REPUESTO RECOMENDADO
COLOURED ITEM = RECOMMENDED SPARE PART

N plano / Drawing N.	Firma / Signature	Fecha / Date	Aparato / Appliance	Lamina / Sheet	
C-3333	Iban R.	2014-12	ACLARADO / RINSING PART CO-352-402 COLD GLASSWASHER	5	Fagor Industrial S.Coop. Onate

ZONA / ZONE	PARTE FUNCIONAL ACLARADO COLD / FUNCTIONAL RINSE PART COLD	LÁMINA / DRAWING	C-3333	FAGOR

ITEM	REFERENCIA REFERENCE	DENOMINACIÓN	DENOMINATION	CO-352 COLD	CO-402 COLD						RECOMMENDED	ELIMINADO ELIMINATED	INTRODUCIDO INTRODUCED	NOTAS / NOTES
1	12024568	VALVULA ANTIRRETORNO	NON-RETURN VALVE	2	2						X			
2	12024192	RACORD EN CRUZ	CROSS FITTING	1	1									
3	12093329	CONDUCTO CALDERIN-RACORD	BOILER-FITTING PIPE	2	_									
3	12093402	CONDUCTO CALDERIN-RACORD	BOILER-FITTING PIPE	_	2									
4	11000083	TUBO GOMA NEGRA D 17x10	BLACK RUBBER PIPE D 17x10	1	1									
5	11000083	TUBO GOMA NEGRA D 17x10	BLACK RUBBER PIPE D 17x10	1	1									
6	11000083	TUBO GOMA NEGRA D 17x10	BLACK RUBBER PIPE D 17x10	1	1									
7	12045206	DOSIFICADOR ABRILL. AQUA	AQUA RINSE-AID DISPENSER	1	1						X			
8	12046466	SOPORTE TERMOSTATOS	THERMOSTATS SUPPORT	1	1									
9	12049602	CALDERIN CO-400	BOILER CO-400	1	1									
10	12110531	ELECTROVALVULA DOBLE	DOUBLE ELECTROVALVE	1	1						X			
11	12024139	CONDUCTO ASPIRACIÓN AZKOY CO	AZKOY SUCTION PIPE	1	1									
12	12010036	ABRAZADERA 12-20	12-20 CLAMP	14	14									
14	12093330	CONDUCTO EV-ANTIRRETORNO	EV-NON-RETURN PIPE	2	_									
14	12093403	CONDUCTO EV-ANTIRRETORNO	EV-NON-RETURN PIPE	_	2									
15	11000070	TUBO GOMA NEGRO D 10,5*5	BLACK RUBBER PIPE D 10,5*5	1	1									
16	12010047	ABRAZADERA 8-14L	8-14L CLAMP	2	2									

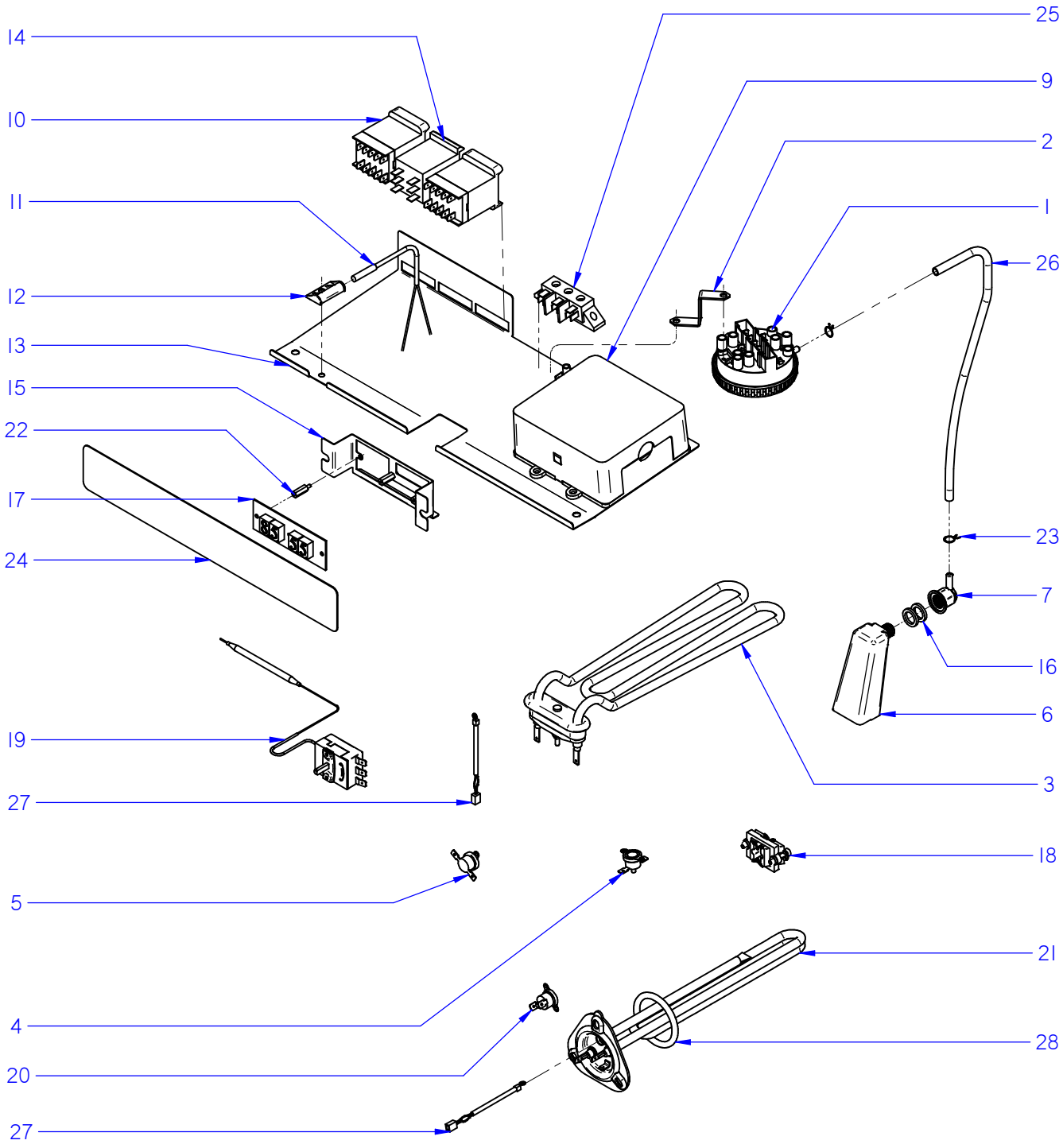

ITEM MARCADO EN COLOR = REPUESTO RECOMENDADO
COLOURED ITEM = RECOMMENDED SPARE PART

N plano / Drawing N.	Firma / Signature	Fecha / Date	Aparato / Appliance PARTE FUNCIONAL LAVADO / WASHING FUNCTIONAL PART	Lamina / Sheet	
C-3335	Iban R.	03-2015	CO-352-402 COLD GLASSWASHER	7	Fagor Industrial S.Coop. FAGOR Oñate

ZONA / ZONE	CONJUNTO ELECTRICO / ELECTRICAL PART			LÁMINA / DRAWING	C-3335	FAGOR

ITEM	REFERENCIA REFERENCE	DENOMINACIÓN	DENOMINATION	CO-352 COLD	CO-402 COLD						RECOMMENDED	ELIMINADO ELIMINATED	INTRODUCIDO INTRODUCED	NOTAS / NOTES
1	12023803	PRESOSTATO SIMPLE	SIMPLE PRESSURE SWITCH	1	1						X			
1	12024981	PRESOSTATO DOBLE	DOUBLE PRESSURE SWITCH	1	1						X			MODELOS **B** MODELS ONLY
2	12023163	SOPORTE PRESOSTATO	PRESSURE SWITCH SUPPORT	1	1									
3	12090524	RESISTENCIA TANQUE 400 2 KW	TUB RESISTOR 400 2KW	1	1						X			
4	12090518	TERM. SEG. 261B NC 95ºC	SAFETY THER. 261B 95ºC	1	1						X			
5	12090526	TERM. SEG. 261 NC 56ºC	SAFETY THER. 261 56ºC	1	1						X			
6	12090549	CAMARA PRESOSTATO CO-400	PRESSURE CHAMBER CO-400	1	1						X			
7	12091147	RACOR PRESOSTATO CO-400	PRESSURE SWITCH FITTING CO-400	1	1									
9	12008750	CONTROL TARJETA 5 RELES	5 RELAY COTROL CARD	1	1						X			
10	12024011	CONTACTOR 230 V. 50-60 HZ	230 V. 50-60 HZ CONTACTOR	2	2						X			
11	12024477	INTERRUPTOR MAGNETICO	MAGNETIC SWITCH	1	1						X			
12	12024066	AMARRE INTERRUPTOR MAGNETICO	MAGNETIC SWITCH'S SUPPORT	1	1									
13	12116648	SOP. COMPONENTES ELECTRICOS	ELECTRIC COMPONENTS SUPPORT	1	_									
13	12113866	SOP. COMPONENTES ELECTRICOS	ELECTRIC COMPONENTS SUPPORT	_	1									
14	12023706	RELE 230V. 16A 50-60 HZ	230V. 16A 50-60 HZ RELAY	1	1						X			
15	12022219	SOPORTE VISUALIZADOR	DISPLAY SUPPORT	1	1									
16	12009873	JUNTA CAMARA PRESOSTATO	PRESSURE CHAMBER SEAL	2	2									
17	12024028	VISUALIZADOR 12V 4 DIGITOS 7 SEG.	12V 4 DIGITS 7 SEGMENTS DISPLAY	1	1						X			
18	12024230	RETENEDOR DE CABLE	CABLE RETAINER	1	1									
19	12046152	TERMOSTAT. CALDERIN 85ºC TECASA	BOILER THERMOSTAT 85ºC TECASA	1	1						X			
20	12096597	TERM_SEG_261B_110ºC_FAST_90	SAFETY THER. 261B_110ºC_FAST_90	1	1						X			
21	12093151	RESISTENCIA CALDERIN 2,4KW	BOILER'S RESISTOR 2,4KW	1	_						X			
21	12093124	RESISTENCIA CALDERIN 2,8KW	BOILER'S RESISTOR 2,8KW	_	1						X			
22	12025260	DISTANCIADOR M3	M3 SPACER	3	3									
23	12023707	BRIDA ELASTICA TUBO	ELASTIC CLAMP FOR PIPES	2	2									
24	12115249	EMBELLECEDOR CO-352-402	CO-352-402 STICKER	1	1						X			
25	12024382	REGLETA 40A 3VIA 5MM	CONNECTION STRIP 40A 3WAY 5MM	1	1									
26	11000066	TUBO GOMA NEGRO D 8*4	BLACK RUBBER PIPE D 8*4	1	1									
27	12025036	CONJUNTO SONDA 64KΩ NTC	64KΩ NTC SENSOR COMPLETE	2	2									
28	12102062	JUNTA TÓRICA RESIS. TUBULAR EVO	EVO TUBULAR RESISTOR O-RING	1	1						X			

ZONA / ZONE	VARIOS / VARIOUS		LÁMINA / DRAWING		FAGOR

ITEM	REFERENCIA REFERENCE	DENOMINACIÓN	DENOMINATION	CO-352 COLD	CO-402 COLD						RECOMMENDED	ELIMINADO ELIMINATED	INTRODUCIDO INTRODUCED	NOTAS / NOTES
	12023746	CABLEADO ALIMENTACIÓN	POWER CORD	1	1									
	12025112	CABLEADO ALIMENTACIÓN UK	POWER CORD UK	1	1									
	12115668	CABLEADO PORTAMANDOS	CONTROL PANEL WIRING	1	1									
	12024183	CABLEADO TIERRAM.BOMBA	EARTH PUMP WIRING	1	1									
	12114337	INSTALACIÓN ELECTRICA	ELECTRICAL WIRING	1	1									

ZONA / ZONE	RECOMENDADOS / RECOMMENDED	LÁMINA / DRAWING	FAGOR

ITEM	REFERENCIA REFERENCE	DENOMINACIÓN	DENOMINATION	CO-352 COLD	CO-352 COLD DD	CO-352 COLD B	CO-352 COLD B DD				RECOMMENDED	ELIMINADO ELIMINATED	INTRODUCIDO INTRODUCED	NOTAS / NOTES
4	12024346	CONDENSADOR 10MF	10MF CAPACITOR	1	1	1	1							C-3330
28	12024216	DOSIFIC. DGTE REGULABLE G300	REGUL. DETERG. DISPENSER G300	_	1	_	1							C-3330
24	12023429	BOMBA LAVADO 50/60HZ 260KW	WASHING PUMP 50/60HZ 260KW	1	1	1	1							C-3330
6	12024114	MANGUERA DESAGUE	DRAINING PIPE	1	1	_	_							C-3331
5	12094265	BOMBA DESAGÜE 1N 50/60Hz 38W	DRAINING PUMP 1N 50/60Hz 38W	_	_	1	1							C-3332
10	12023666	MANGUERA DESAGÜE	DRAINING PIPE	_	_	1	1							C-3332
1	12024568	VALVULA ANTIRRETORNO	NON-RETURN VALVE	2	2	2	2							C-3333
7	12045206	DOSIFICADOR ABRILL. AQUA	AQUA RINSE-AID DISPENSER	1	1	1	1							C-3333
10	12110531	ELECTROVALVULA DOBLE	DOUBLE ELECTROVALVE	1	1	1	1							C-3333
1	12023803	PRESOSTATO SIMPLE	SIMPLE PRESSURE SWITCH	1	1	_	1							C-3335
1	12024981	PRESOSTATO DOBLE	DOUBLE PRESSURE SWITCH	_	_	1	_							C-3335
3	12090524	RESISTENCIA TANQUE 400 2 KW	TUB RESISTOR 400 2KW	1	1	1	1							C-3335
4	12090518	TERM. SEG. 261B NC 95ºC	SAFETY THER. 261B 95ºC	1	1	1	1							C-3335
5	12090526	TERM. SEG. 261 NC 56ºC	SAFETY THER. 261 56ºC	1	1	1	1							C-3335
6	12090549	CAMARA PRESOSTATO CO-400	PRESSURE CHAMBER CO-400	1	1	1	1							C-3335
9	12008750	CONTROL TARJETA 5 RELES	5 RELAY COTROL CARD	1	1	1	1							C-3335
10	12024011	CONTACTOR 230 V. 50-60 HZ	230 V. 50-60 HZ CONTACTOR	2	2	2	2							C-3335
11	12024477	INTERRUPTOR MAGNETICO	MAGNETIC SWITCH	1	1	1	1							C-3335
14	12023706	RELE 230V. 16A 50-60 HZ	230V. 16A 50-60 HZ RELAY	1	1	1	1							C-3335
17	12024028	VISUALIZADOR 12V 4 DIGITOS 7 SEG.	12V 4 DIGITS 7 SEGMENTS DISPLAY	1	1	1	1							C-3335
19	12046152	TERMOSTAT. CALDERIN 85ºC TECASA	BOILER THERMOSTAT 85ºC TECASA	1	1	1	1							C-3335
20	12096597	TERM_SEG_261B_110ºC_FAST_90	SAFETY THER. 261B_110ºC_FAST_90	1	1	1	1							C-3335
21	12093151	RESISTENCIA CALDERIN 2,4KW	BOILER'S RESISTOR 2,4KW	1	1	1	1							C-3335
24	12115249	EMBELLECEDOR CO-352-402	CO-352-402 STICKER	1	1	1	1							C-3335
28	12102062	JUNTA TÓRICA RESIS. TUBULAR EVO	EVO TUBULAR RESISTOR O-RING	1	1	1	1							C-3335

ZONA / ZONE	RECOMENDADOS / RECOMMENDED	LÁMINA / DRAWING	FAGOR

ITEM	REFERENCIA REFERENCE	DENOMINACIÓN	DENOMINATION	CO-402 COLD	CO-402 COLD DD	CO-402 COLD B	CO-402 COLD B DD				RECOMMENDED	ELIMINADO ELIMINATED	INTRODUCIDO INTRODUCED	NOTAS / NOTES
4	12024346	CONDENSADOR 10MF	10MF CAPACITOR	1	1	1	1							C-3330
28	12024216	DOSIFIC. DGTE REGULABLE G300	REGUL. DETERG. DISPENSER G300	_	1	_	1							C-3330
24	12023429	BOMBA LAVADO 50/60HZ 260KW	WASHING PUMP 50/60HZ 260KW	1	1	1	1							C-3330
6	12024114	MANGUERA DESAGUE	DRAINING PIPE	1	1	_	_							C-3331
5	12094265	BOMBA DESAGÜE 1N 50/60Hz 38W	DRAINING PUMP 1N 50/60Hz 38W	_	_	1	1							C-3332
10	12023666	MANGUERA DESAGÜE	DRAINING PIPE	_	_	1	1							C-3332
1	12024568	VALVULA ANTIRRETORNO	NON-RETURN VALVE	2	2	2	2							C-3333
7	12045206	DOSIFICADOR ABRILL. AQUA	AQUA RINSE-AID DISPENSER	1	1	1	1							C-3333
10	12110531	ELECTROVALVULA DOBLE	DOUBLE ELECTROVALVE	1	1	1	1							C-3333
1	12023803	PRESOSTATO SIMPLE	SIMPLE PRESSURE SWITCH	1	1	_	1							C-3335
1	12024981	PRESOSTATO DOBLE	DOUBLE PRESSURE SWITCH	_	_	1	_							C-3335
3	12090524	RESISTENCIA TANQUE 400 2 KW	TUB RESISTOR 400 2KW	1	1	1	1							C-3335
4	12090518	TERM. SEG. 261B NC 95ºC	SAFETY THER. 261B 95ºC	1	1	1	1							C-3335
5	12090526	TERM. SEG. 261 NC 56ºC	SAFETY THER. 261 56ºC	1	1	1	1							C-3335
6	12090549	CAMARA PRESOSTATO CO-400	PRESSURE CHAMBER CO-400	1	1	1	1							C-3335
9	12008750	CONTROL TARJETA 5 RELES	5 RELAY COTROL CARD	1	1	1	1							C-3335
10	12024011	CONTACTOR 230 V. 50-60 HZ	230 V. 50-60 HZ CONTACTOR	2	2	2	2							C-3335
11	12024477	INTERRUPTOR MAGNETICO	MAGNETIC SWITCH	1	1	1	1							C-3335
14	12023706	RELE 230V. 16A 50-60 HZ	230V. 16A 50-60 HZ RELAY	1	1	1	1							C-3335
17	12024028	VISUALIZADOR 12V 4 DIGITOS 7 SEG.	12V 4 DIGITS 7 SEGMENTS DISPLAY	1	1	1	1							C-3335
19	12046152	TERMOSTAT. CALDERIN 85ºC TECASA	BOILER THERMOSTAT 85ºC TECASA	1	1	1	1							C-3335
20	12096597	TERM_SEG_261B_110ºC_FAST_90	SAFETY THER. 261B_110ºC_FAST_90	1	1	1	1							C-3335
21	12093124	RESISTENCIA CALDERIN 2,8KW	BOILER'S RESISTOR 2,8KW	1	1	1	1							C-3335
24	12115249	EMBELLECEDOR CO-352-402	CO-352-402 STICKER	1	1	1	1							C-3335
28	12102062	JUNTA TÓRICA RESIS. TUBULAR EVO	EVO TUBULAR RESISTOR O-RING	1	1	1	1							C-3335

CO 402 W

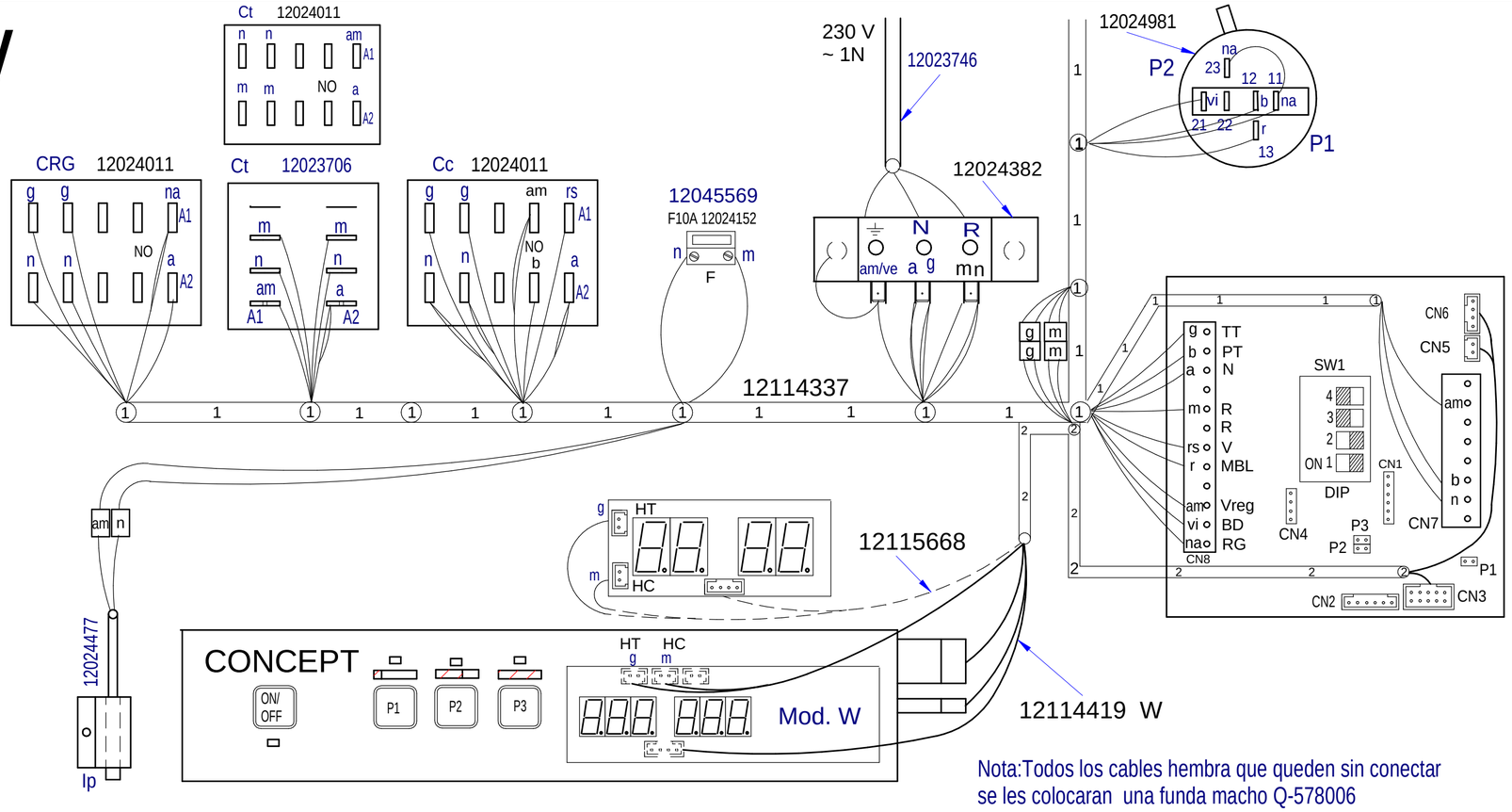

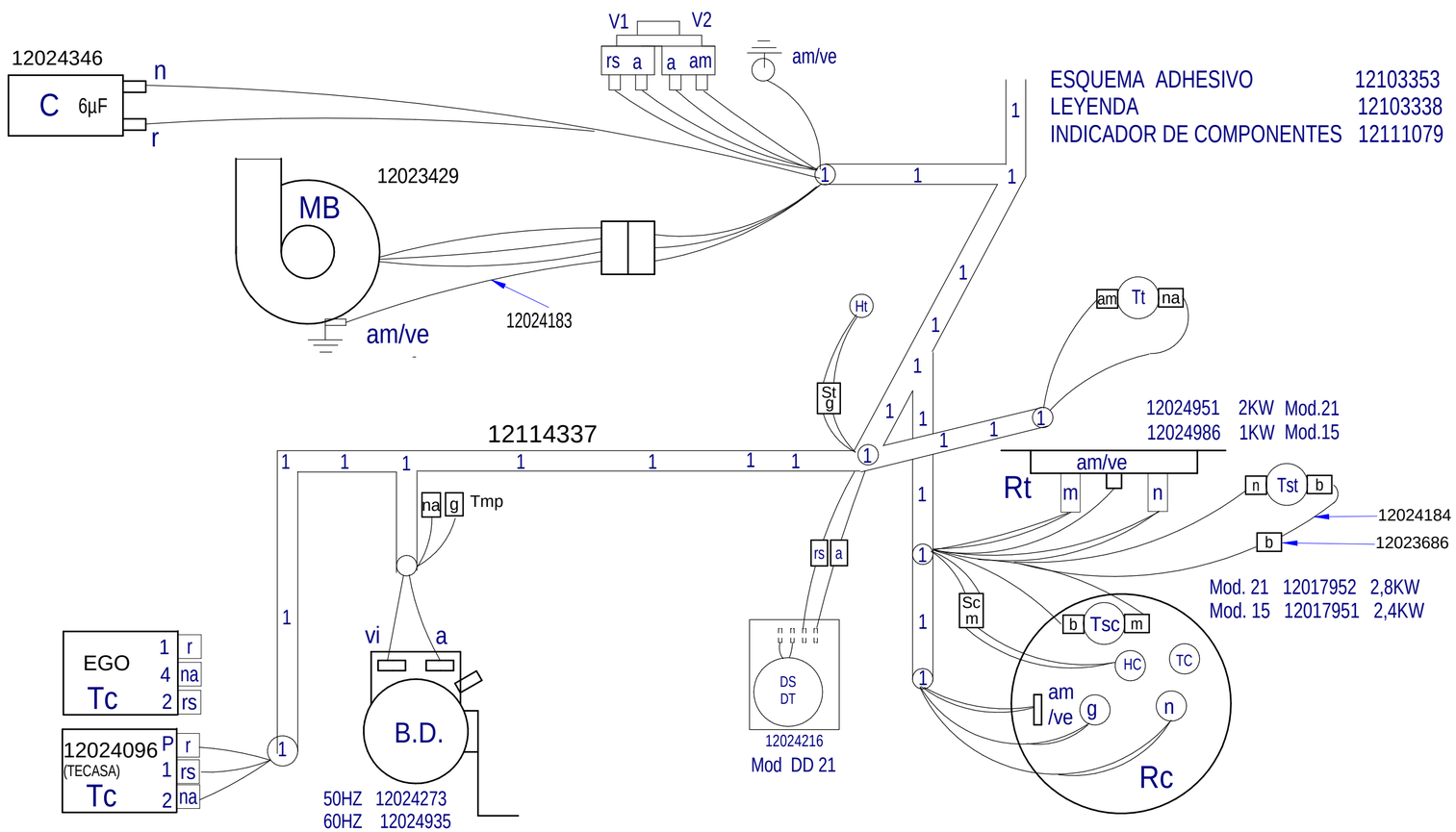

-	Plano Montaje CO 402 W (21 W)	-	12114490		
Nº	TITLE	QTY	CODE	MATERIAL	TREATMENT

GENERAL TOLERANCES: ISO 2768-1 Very Coarse

LINEAR	Fine	Medium	Coarse	Very Coarse
<3mm	±0.05	±0.10	±0.15	
3-6mm	±0.05	±0.10	±0.20	
6-30mm	±0.10	±0.20	±0.50	
30-120mm	±0.15	±0.30	±0.80	
120-400mm	±0.20	±0.50	±1.20	
400-1000mm	±0.30	±0.80	±2.00	
1000-2000mm	±0.50	±1.20	±3.00	

GENERAL TOLERANCE FOR FORM AND POSITION: ISO 2768-2

ANGULAR	Fine	Medium	Coarse	Very Coarse
<10mm	±1°	±1°30'	±3°	
10-50mm	±30'	±1°	±2°	
50-120mm	±20'	±30'	±1°	
120-400mm	±10'	±15'	±30'	
>400mm	±5'	±10'	±20'	

LAVAVAJILLAS

FAGOR INDUSTRIAL

DESIGNED BY	VALIDATED BY	DATE
M.Maillo	A.G.	12.06.2014

SHEET FORMAT:	A2
DESING CENTER:	ONA
MAT STATUS:	
DOC STATUS:	
SHEET:	1 / 1
SCALE:	1:1

12114490 REVISION -

PROPOSED BY: - ISSUE DATE:

CO-502 W, COP-504 W

208-240 V, 60Hz, 3Ph

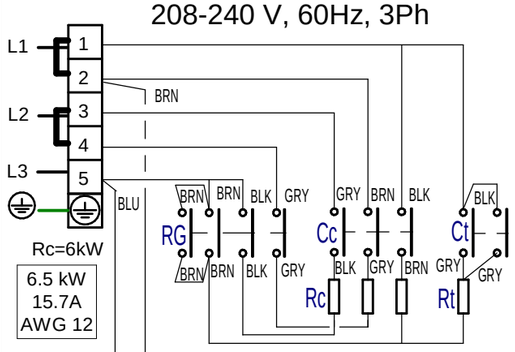

Rc=6kW

6.5 kW
15.7A
AWG 12

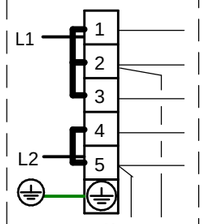

Rc=6kW

6.5 kW
27.1A
AWG 10

208-240 V
60Hz,1Ph

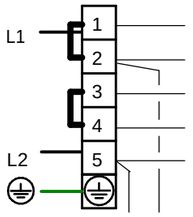

Rc=3kW

3.5 kW
14.6A
AWG 12

CO-142W, COP-174 W

400 V. 3N

CO-142 W
15 kW
36.1A
AWG 8

COP-174 W
18 kW
43.4A
AWG 6

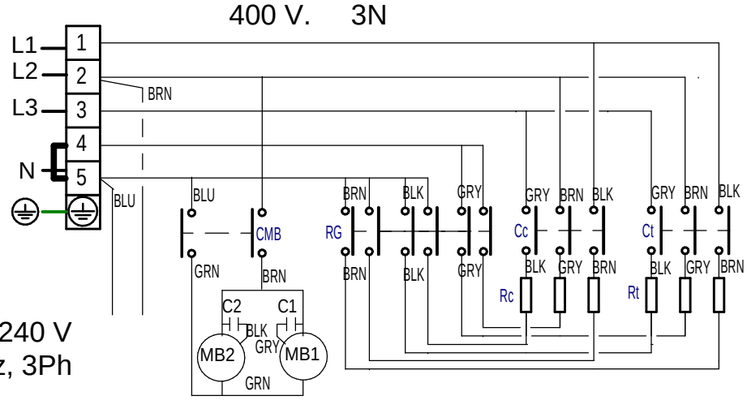

208-240 V
60Hz, 3Ph

CO-402 W

208-240 V, 60Hz,1Ph

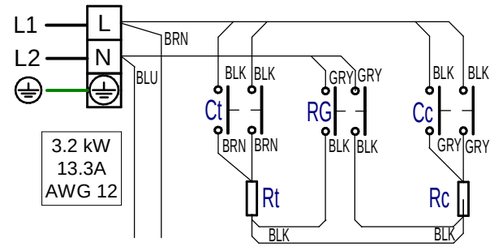

3.2 kW
13.3A
AWG 12

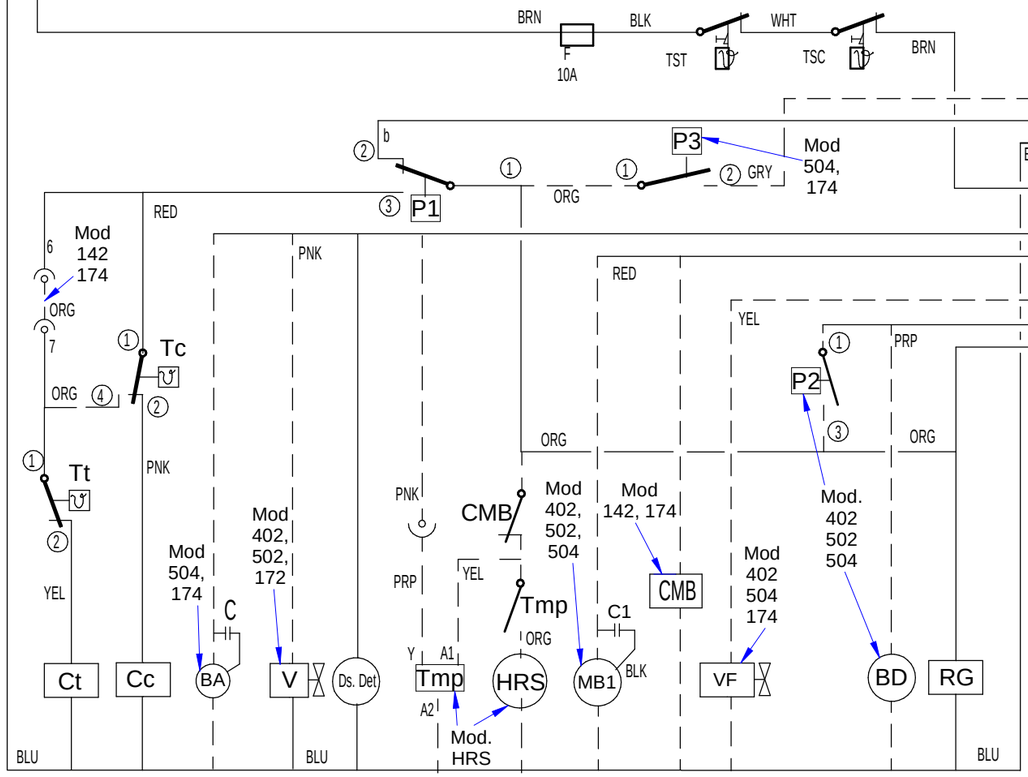

CYCLE

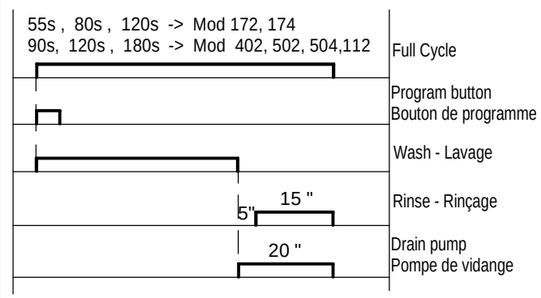

Ref. 12114451

-	Esquema Teorico CO XX2 W, COP XX4 W	-	12114451		
Nº	TITLE	QTY	CODE	MATERIAL	TREATMENT

GENERAL TOLERANCES: ISO 2768-1 Very Coarse

LINEAR	Fine	Medium	Coarse	Very Coarse
<3mm	±0.05	±0.10	±0.15	
3-6mm	±0.05	±0.10	±0.20	
6-30mm	±0.10	±0.20	±0.50	
30-120mm	±0.15	±0.30	±0.80	
120-400mm	±0.20	±0.50	±1.20	
400-1000mm	±0.30	±0.80	±2.00	
1000-2000mm	±0.50	±1.20	±3.00	

ANGULAR	Fine	Medium	Coarse	Very Coarse
<10mm	±1º		±1º30'	±3º
10-50mm	±30'		±1º	±2º
50-120mm	±20'		±30'	±1º
120-400mm	±10'		±15'	±30'
>400mm	±5'		±10'	±20'

GENERAL TOLERANCE FOR FORM AND POSITION: ISO 2768-2

LAVAVAJILLAS

FAGOR INDUSTRIAL

DESIGNED BY	VALIDATED BY	DATE
M.Maillo	A.gallastegui	11.06.2014

SHEET FORMAT:	A3
DESING CENTER:	ONA
MAT STATUS:	
DOC STATUS:	
SHEET:	1 / 1
SCALE:	1:1

12114451

REVISION

-

PROPOSED BY: - ISSUE DATE:

LEYENDA APERTURA FRONTAL Y CAPOTA

	ESPAÑOL	ENGLISH	FRANÇAIS	DEUTSCH	ITALIANO	中文
Ⓐ Ⓑ	Puntos de conexion con R	Conecction point with R	Points de conexion R	Anschlußpunkte mit R	Punti di collegamento con R	带R接触点
BA	Bomba Aclarado	Rinse pump				
BD	Bomba desagüe	Drain pump	Pompe de vidange	Abflußpumpe	Pompa scarico	排水泵
C1, C2, C3	Condensador	Condenser	Condensateur	Kondensator	Condensatore	电容
CMB	Contactor bomba lavado	Wash pump contactor	Contacteur pompe lavage	Türrelais	Contattore pompa lavaggio	清洗泵接触器
Cc	Contactor calentamiento calderin	Boiler heating contactor	Contacteur chauf. surchauffeur	Kontaktschütz Waschpumpe	Contattore riscaldamento boiler	升温箱加热接触器
Ct	Contactor calentamiento tanque	Tank heating contactor	Contacteur chaufage cuve	Kontaktschütz Boilerheizung	Contattore riscaldamento serbatoio	水箱加热接触器
CP	Rele puerta	Door relay	Relais porte	Kontaktschütz Heizung Tank	Rele porta	门继电器
Ds.	Dosificador	Detergent doser	Dosseur	Dosierer Spülmittel	Dosatore detersivo	清洗剂药液泵
E.B	Electrobomba de presion	Electric pressure pump	Electropompe de pression	Elektro-Drucksteigungspumpe	Electropompa pressione	电子压力泵
IG	Interruptor general	Main switch	Interrupteur general	Hauptschalter	Interruttore generale	主开关
IP	Micro puerta	Door microswitch	Micro porte	Mikroschalter Tür	Micro porta	门磁开关
H1	Piloto de encendido	Operation light	Voyant funcionement	Betriebsanzeigelampe	Spia accensione	运行指示灯
H2	Piloto marcha	Start light	Voyant demarrage	Startanzeigelampe	Spia avvio	开始指示灯
H3	Piloto maquina preparada	Light machine ready	Voyant machine prêt	Betriebsbereitschaftsanzeigelampe	Pilota macchina preparata	加热完成 指示灯
HSal	Piloto falta de Sal	Light Lack of Salt				
MB1, MB2	Bomba lavado	Wash pump	Pompe lavage	Waschpumpe	Pompa lavaggio	清洗泵
M	Motor programador	Motor programmer	Moteur du programmateur	Motor Programmiervorrichtung	Motore programmatore	程序电机
M Av. R	Motor program. avance rapido	Motor program. rapid advance	Moteur du progr.avance rapide	Motor Programmiervorrich. Betrieb	Motore programmatore avanzamento rapido	程序电机. 高速高级
M1	Micro programador marcha	Micro programmer on	Micro du programm. de marche	Motor Programmiervorrich. Waschen	Micro programma. di funzionamento	微程序 开
M2	Micro programador lavado	Micro programmer wash	Micro du programm. de lavage	Motor Programmiervorrich. Spülen	Micro programmatore di lavaggio	微程序 清洗
M3	Micro programador aclarado	Micro programmer rinse	Micro du programm. de rinçage	Motor Programmiervorrich. Vorlauf	Micro programmatore di risciacquo	微程序 喷淋
M4, M5	Micro programador avance	Micro programmer advance	Micro du programm. avance	Motor Programmiervorrich. schneller Vorlauf	Micro programmatore avanzamento	微程序 高级
P1, P3	Presostato	Pressure switch	Pressostat	Druckwächter	Pressostato	压力开关
P2	Presostato limitador	Hi-limit pressure switch	Pressostat de securité	Begrenzer Druckwächter	Pressostato limitatore	高水位限制 压力开关
R	Rele de Generador de A.C.	Generator relay	Relais du Generateur	Relais Generator	Rele Generatore	热水供应器继电器
RG	Rele General	Main Relay		Stromversorgungsanschluß Gener.		
Ⓛ1 Ⓛ2 Ⓛ3 Ⓝ	Alimentac. Generador A.C.	Water heater feeding	Alimentation generateur		Alimentazione generatore	热水供应器电源线
RC	Resistencia calderin	Boiler heating element	Resistance surchauffeur	Heizwiderstand Boiler	Resistenza boiler	升温箱加热管
RT	Resistencia tanque	Tank heater	Resistance cuve	Heizwiderstand Tank	Resistenza serbatoio	水箱加热管
Tt	Termostato tanque	Tank thermostat	Thermostat de cuve	Thermostat Tank	Termostato serbatoio	水箱温控器
TC	Termostato calderin	Boiler thermostat	Thermostat surchauffeur	Thermostat kessel	Termostato boiler	升温箱温控器
Tst	Limitador tanque	Tank limiter	Limitateur de cuve	Begrenzer Tank	Limitatore serbatoio	水箱安全温控器
TSC	Limitador calderin	Boiler Hi-limit	Limiteur surchauffeur	Begrenzer Boiler	Limitatore boiler	升温箱安全温控器
TSTP	Termostato termo-stop	Termo-stop Thermostat	Thermostat Termo-stop	Thermostat Termo-stop	Termostato Termo-stop	温度停止温控器
V	Electrovalvula llenado y aclarado	Fill and rinse valve	Electrovan. remplissage rinçage	Elektroventil Füllen und Spülen	Elettroval. riempimento e risciacquo	电磁阀
Vf	Electrovalvula Aclarado Frio	Cold Water rinse valve				
VR1, VR2, VR3, BR	Electrovalvula Descalcificacion	Soft Water valve				
VE,	Ventilador cuadro electrico	Switchboard fan	Ventilateur tableau electrique	Schalttafelventilator	Ventilatore quadro elettrico	风机
HRS	Sistema recuperacion energia	Heat Recovery System				

COLOR	COLORES	COLOUR	COULEURS	FARBEN	COLORE	颜色
a = BLU =	Azul	Blue	Bleu	Blau	Blu	蓝
am = YEL =	Amarillo	Yellow	Jaune	Gelb	Giallo	黄
am/ve = YEL/GRN	Amarillo/verde	Yellow / green	Jaune / vert	Gelb/grün	Giallo/verde	黄/绿
b = WHT =	Blanco	White	Blanc	Weiß	Bianco	白
g = GRY =	Gris	Grey	Gris	Grau	Grigio	灰
m = BRN =	Marrón	Brown	Marron	Braun	Marrone	棕
n = BLK =	Negro	Black	Noir	Schwarz	Nero	黑
na = ORG =	Naranja	Orange	Orange	Orange	Arancio	橙
r = RED =	Rojo	Red	Rouge	Rot	Rosso	红
rs = PNK =	Rosa	Pink	Rose	Rosa	Roseo	粉
ve = GRN =	Verde	Green	Vert	Grün	Verde	绿
vi = PRP =	Violeta	Purple	Violet	Violett	Viola	紫

12103338